Mitutoyo

GB-20007

MEASURING INSTRUMENTS CATALOGUE 2022 - 2024

Competence and customer proximity on one spot

Throughout Europe, the name Mitutoyo represents innovational power as well as outstanding quality in the field of sophisticated dimensional measuring solutions. In order to strengthen and synchronise the concerted pan-European activities, Mitutoyo established the European headquarters named Mitutoyo Europe GmbH in Neuss near Düsseldorf/Germany in January 2010.

The headquarters oversees all the activities of Mitutoyo's sales, service and production facilities throughout Europe and adjacent markets, e.g. of Turkey. It also plans and implements the medium and long term business strategies of such European operations. A Mitutoyo Europe GmbH key objective is to promote coordination amongst its European group companies in order to optimise its sales and technical support services in the best interests of customer satisfaction.

More than 260 highly skilled members of staff work for the benefit of our customers in development, service, sales and administration. They are supported by the specialists of Mitutoyo CTL Germany GmbH in Oberndorf on the River Neckar, which focuses solely on developing ground-breakingly powerful and easy to use software for three-coordinate measurement technology. The peripheral fields of coordinate measuring machines, jigging and loading systems and thermal cabins are covered by KOMEG company based in Saarland.

The range of products offered by Mitutoyo in Europe is divided into eight groups:

- Coordinate Measuring Machines
- Vision Measuring Systems
- Form Measurement
- Optical Measuring
- Sensor Systems
- Test Equipment and Seismometers
- Digital Scale and DRO Systems
- Small Tool Instruments and Data Management

In addition to top-level measuring and testing equipment, the range of products also includes a wide selection of accessories and – as a further area of focus – sophisticated, high-performance software for coordinate measuring machines and vision measuring systems as well as surface roughness, hardness and form measurement.

The Mitutoyo Information Center of Metrology (MIM) has been demonstrating the manufacturer's commitment to advanced training in all fields of dimensional measurement technology since 1999. The MIM is open to anyone working in the fields of manufacturing, service, science and research. Mitutoyo Europe GmbH is, moreover, a corporate member of "Ausbildung Koordinatenmesstechnik e. V. (AUKOM)". This association is dedicated to providing training schemes for coordinate measuring technology with the aim of ensuring a neutral, comprehensive and state of the art training concept.

Germany has also been home to the Mitutoyo M³ Solutions Europe division since 2004. The abbreviation M³ stands for Mitutoyo Measurement Metrology and, as such, for the concept of special measuring solutions developed by Mitutoyo to meet the particular requirements of its customers across the whole breadth of length, form and surface measurement technology. The Mitutoyo Europe GmbH in Neuss offers sample configurations in the 400 m² M³ Solution Center Europe to demonstrate the numerous possibilities. The center also presents the smooth and seamlss integration of peripheral systems, such as jigs or feed and climate control systems from KOMEG alongside the measuring equipment.

Highlights

Dial Test Indicator

ABS AOS Caliper IP67

New Indicator Series

QM Height

MF Microscope

SJ-410

CS-3300

Roundtracer Extreme

HM-210

Automatic CMM Part Program Generation

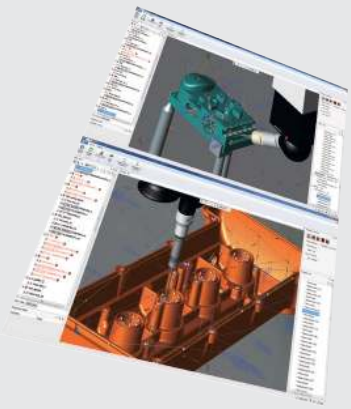

MACH Ko-ga-me

CRYSTA-Apex V

MANUAL Vision

CNC Vision

Fixtures

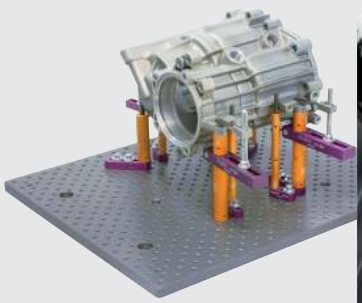

Styli

Table of Contents

Data Management

Quality Management Software
Digimatic Mini Processor
Signal Cables
Wireless Data Transmission
etc.

14 - 35

Height Gauges

Height Gauge
Height Gauge Accessories
Height Gauge with Data Processing Unit

219 - 231

Micrometers

Digimatic Micrometers and Mechanical Micrometers
Micrometers Accessories
Micrometer Heads
Micrometer Head Accessories

36 - 130

Indicators

ABSOLUTE Digimatic Indicator
Dial Indicator
Accessories for Indicator
Dial Test Indicator
etc.

232- 299

Inside Measuring Instruments

Inside Micrometer
Bore Gauges
Inside Measuring Instruments Accessories

131- 167

Auxiliary Equipment and Miscellaneous

Stands, Bench Tools, Vices, V-Blocks, Plates, Protectors, Levels, Squares, Rules, Spring Calipers

300 - 320

Calipers

Absolute Digimatic Caliper
Analog Caliper
Special Purpose Caliper
Caliper Accessories

168 - 204

Calibration Instruments

Height Master
Check Master
Calibration Tools

321 - 335

Depth Measuring Instruments

Depth Measuring Instruments

205- 218

Gauge Blocks

Steel Gauge Block Sets
Steel Individual Gauge Blocks
CERA Gauge Block Sets
CERA Individual Gauge Blocks
etc.

336- 359

Sensor Systems and Laser Scan Micrometers

Linear Gauges
Counters and Display Units
LITEMATIC
Laser Scan Micrometer

360- 392

Coordinate Measuring Machines

CMM Software
Mobile 3D Systems and Manual CMMs
Small- and Medium Size CMMs
Large Size CMMs
etc.

562 - 596

Digital Scale and DRO Systems

DRO Linear Scales
NC Linear Scales
Scale Units

393 - 419

Manual and CNC Vision Measuring Systems

Manual 2D Vision Measuring System
3D CNC Vision Measuring System
for standard, advanced and special applications

597 - 617

Optical systems/products

Measuring Microscopes
Microscope Units and lenses
Measuring Projectors
TAGLENS

420- 473

For better communication with our customers

Mitutoyo's Domestic Network
Mitutoyo's Overseas Network
M³ Solution Centers

618 - 621

Form Measurement

Surface Roughness Measuring Instruments Surftest
Contour Measuring Instruments Contracer
Form Measuring Instruments
etc.

474 - 533

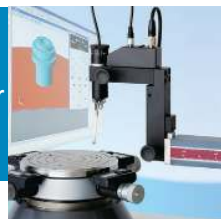

Indexes

INDEXES

622 - 629

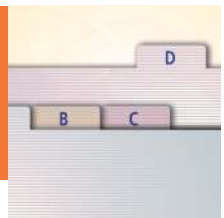

Hardness Testing

Hardness Testing Machines

534 - 561

Offering Reliable Traceability Worldwide

Calibration laboratories worldwide

Mitutoyo has a system allowing comprehensive support for the calibration of precision measuring products in the global market. In order to provide calibration services on a global basis, Mitutoyo has calibration laboratories that have received ISO/IEC 17025 certification, which is an international standard, from the accredited organisations in each of the countries in which Mitutoyo operates and subsidiaries are located, both in Japan and overseas.

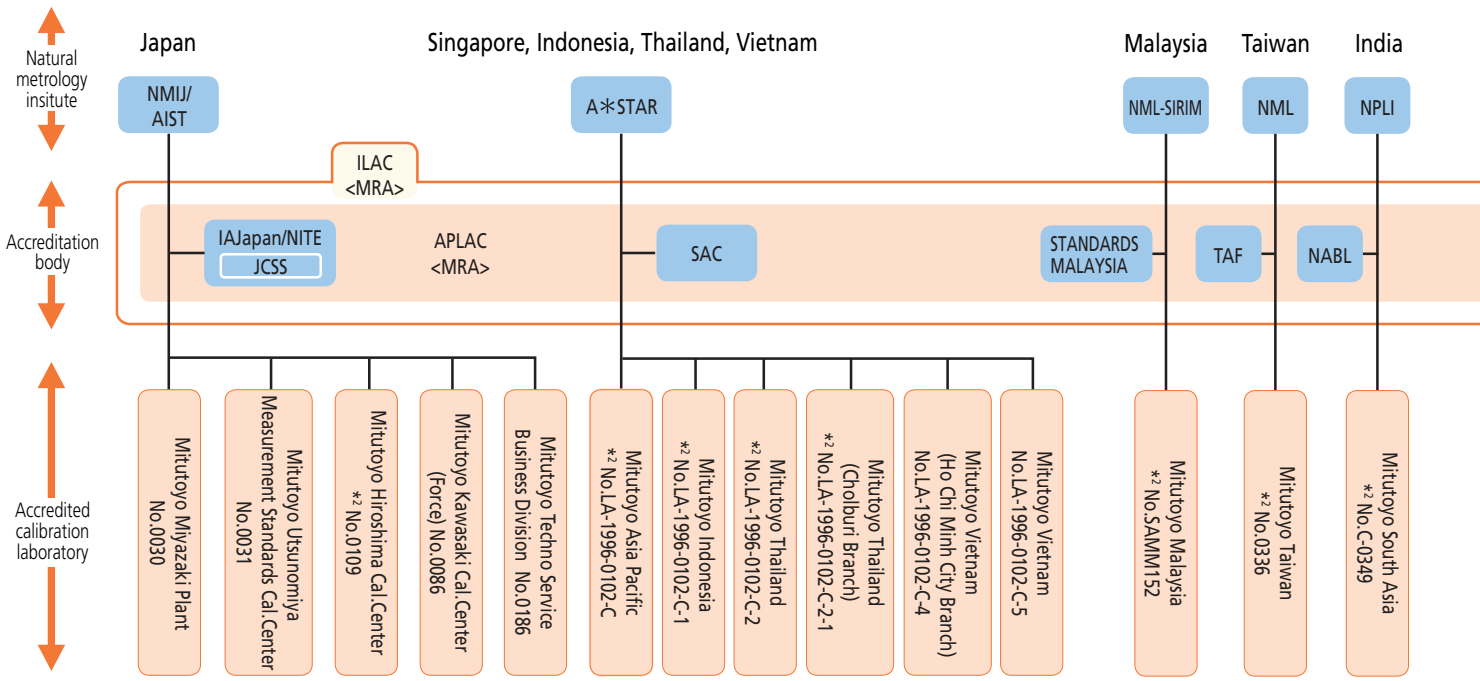

*1 Length and Temperature *2 Length and Hardness No mark is only length

AIST:	National Institute of Advanced Industrial Science and Technology
NMIJ:	National Metrology Institute of Japan
JCSS:	Japan Calibration Service System
NITE:	National Institute of Technology and Evaluation
IAJapan:	International Accreditation Japan
A*STAR:	Agency for Science, Technology and Research
SAC:	Singapore Accreditation Council
NML:	National Measurement Laboratory
TAF:	Taiwan Accreditation Foundation
NML-SIRIM:	National Metrology Laboratory, Standards and Industrial Research Institute of Malaysia
STANDARDS: MALAYSIA	Department of Standards Malaysia
NIST:	National Institute of Standards and Technology
A2LA:	American Association for Laboratory Accreditation
NRC-INMS:	National Research Council of Canada-Institute for National Measurement Standards
CLAS:	Calibration Laboratory Assessment Service
SCC:	Standards Council of Canada
CENAM:	Centro Nacional de Metrologi´a
EMA:	Entidad Mexicana de Acreditacio´n, a.c.
UKAS:	United Kingdom Accreditation Service
NMi:	Nederlands Meetinstituut
RvA:	Raad voor Accreditatie
PTB:	Physikalisch-Technische Bundesanstalt
DAkkS:	Deutsche Akkreditierungsstelle GmbH
METAS:	The Swiss Federal Office of Metrology and Accreditation
SAS:	Swiss Accreditation Service
IMGC:	Istituto di Metrologia " GUSTAVO COLONNETTI "
ACCREDIA:	L'NTE ITALIANO DI ACCREDITAMENTO
SP:	Swedish National Testing and Research Institute
SWEDAC:	Swedish Board for Accreditation and Conformity Assessment
INMETRO:	Instituto Nacional de Metrologia Normalizacao e Qualidade Industrial
RBC:	Rede Brasileira de Calibracao
INTI:	Instituto Nacional de Tecnologia Industrial
OAA:	Organismo Argentino de Acreditaci
NPL:	National Physical Laboratory
NPLI:	National Physical Laboratory of India
NABL:	National Accreditation Board for Testing and Calibration Laboratories
(ILAC):	International Laboratory Accreditation Cooperation
(APLAC):	Asia-Pacific Laboratory Accreditation Cooperation
(EA):	European Accreditation Cooperation
(MRA):	Mutual Recognition Arrangement
#:	Accreditation No.

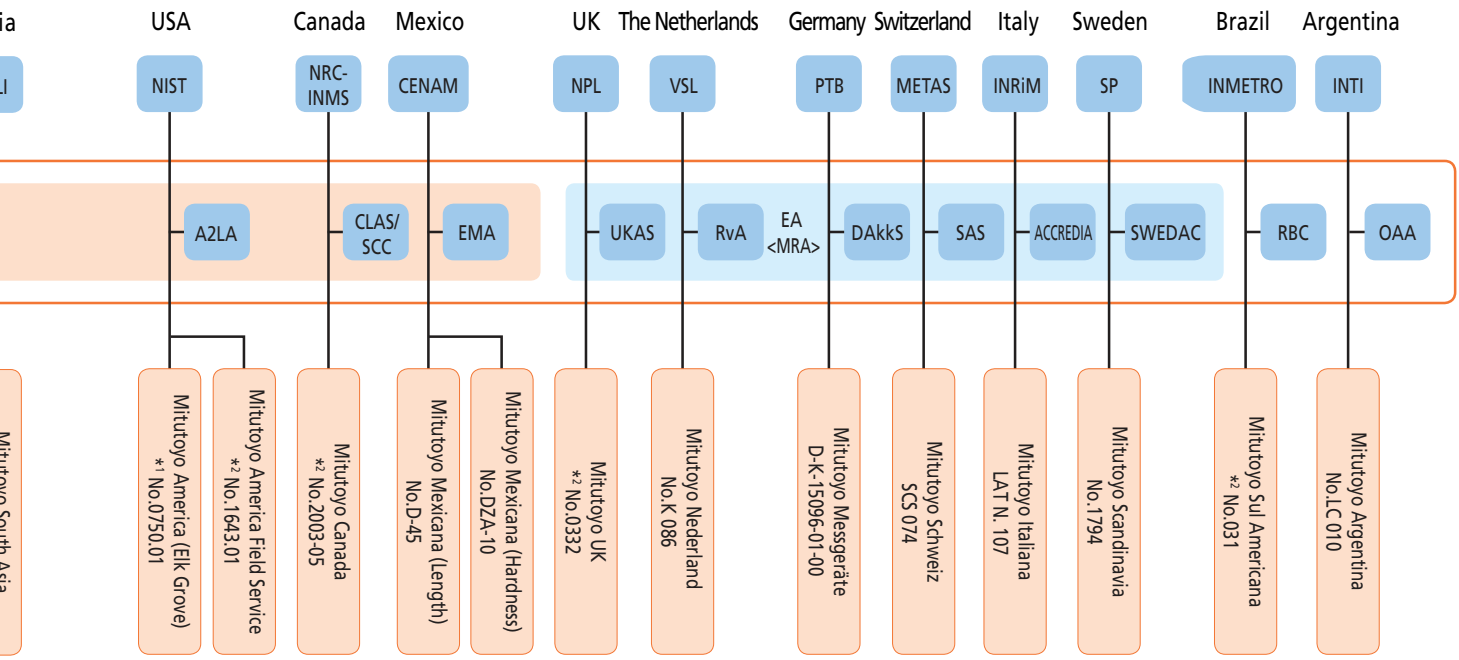
ia
USA
Canada
Mexico
UK
The Netherlands
Germany
Switzerland
Italy
Sweden
Brazil
Argentina
LI
NIST
NRC-INMS
CENAM
NPL
VSL
PTB
METAS
INRiM
SP
INMETRO
INTI
A2LA
CLAS/SCC
EMA
UKAS
RvA
EA <MRA>
DAkkS
SAS
ACCREDIA
SWEDAC
RBC
OAA
Mitutoyo South Asia
Mitutoyo America (Elk Grove) *1 No.0750.01
Mitutoyo America Field Service *2 No.1643.01
Mitutoyo Canada *2 No.2003-05
Mitutoyo Mexicana (Length) No.D-45
Mitutoyo Mexicana (Hardness) No.DZA-10
Mitutoyo UK *2 No.0332
Mitutoyo Nederland No.K 086
Mitutoyo Messgeräte D-K-15096-01-00
Mitutoyo Schweiz SCS 074
Mitutoyo Italiana LAT N. 107
Mitutoyo Scandinavia No.1794
Mitutoyo Sul Americana *2 No.031
Mitutoyo Argentina No.LC 010

ACCREDITED LABORATORY
MITUTOYO AMERICA CORPORATION (MAC)
Calibration

ema
Mitutoyo Mexicana, S.A. de C.V.
Laboratorio de Calibración Mitutoyo México
Dureza

Certificate of Accreditation

NABL
National Accreditation Board for Testing and Calibration Laboratories
CERTIFICATE OF ACCREDITATION
MITUTOYO SOUTH ASIA PRIVATE LIMITED
NEW DELHI
MECHANICAL CALIBRATION

Offering High-level Calibration Services Worldwide

Based on highest measurement capabilities of the same level as national standards

Traceability system

Mitutoyo has a traceability system made possible through an in-house calibration organisation certified by the ISO/IEC 17025 international standard, with length standards directly related to national standards (atomic clock synchronised to UTC and the optical frequency comb) at the highest level.
National standards are mutually recognised by CIPM, and the certified calibration organisation is mutually recognised by ILAC, so that the establishment and maintenance of traceability for Mitutoyo products is achieved both in Japan and overseas.

Certificate of JCSS accredited laboratory (Mitutoyo Utsunomiya Measurement Standards Calibration Center)

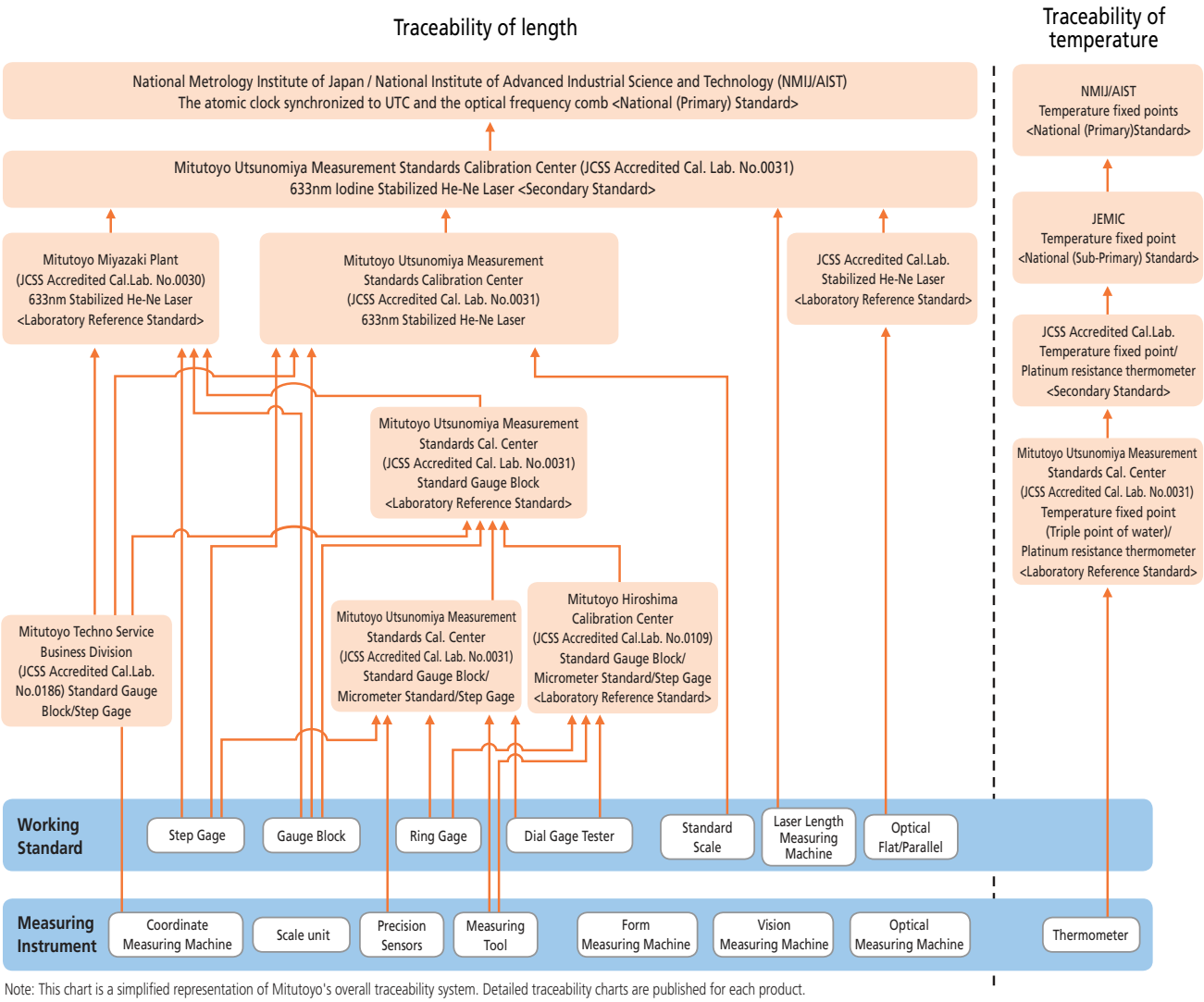

Note: This chart is a simplified representation of Mitutoyo's overall traceability system. Detailed traceability charts are published for each product.

CE Marking Directives

Traceability of Test Equipment

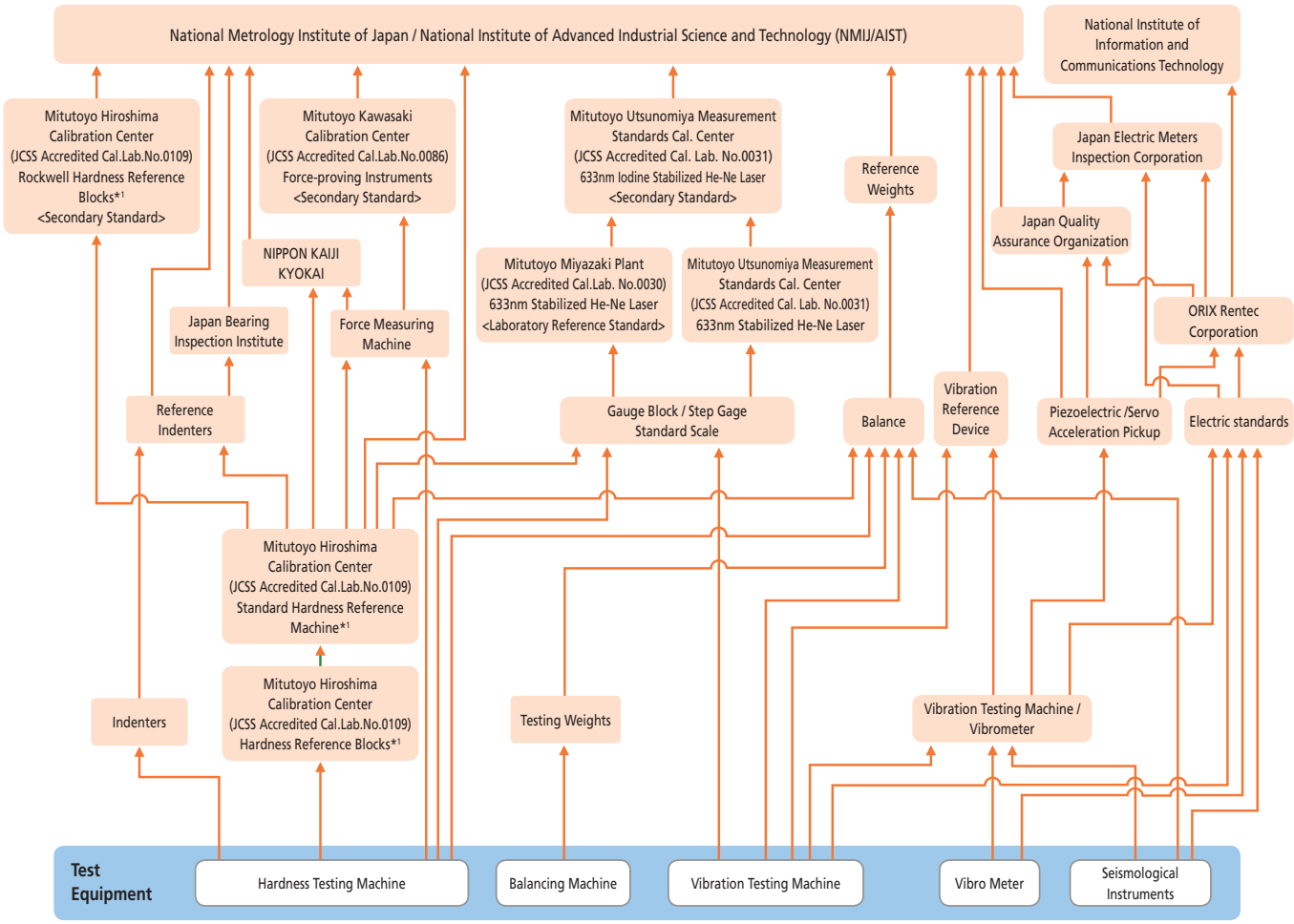

*1 The scope of JCSS accreditation is from 20HRC up to 65HRC in Rockwell Hardness Testing Machines and Hardness Reference Blocks.

Note: This chart is a simplified representation of Mitutoyo's overall traceability system. Detailed traceability charts are published for each product.

CE Marking Directives

CE stands for "Conformité Européenne", a challenging and important task for Mitutoyo in Europe. For Mitutoyo as a manufacturer of measuring electronics and measuring machines this means no sale without CE marking, no CE marking without completed conformity assessment procedure.

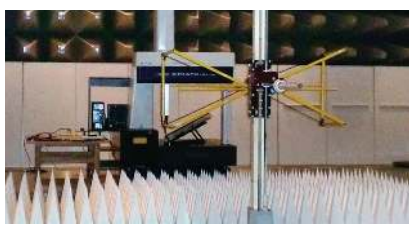

Meaning of Symbols

ABSOLUTE®

ABSOLUTE Linear Encoder

Mitutoyo's technology has realised the absolute position method (absolute method). With this method, you do not have to reset the system to zero after turning it off and then turning it on. The position information recorded on the scale is read every time. The following three types of absolute encoders are available: electrostatic capacitance model, electromagnetic induction model and model combining the electrostatic capacitance and optical methods. These encoders are widely used in a variety of measuring instruments as the length measuring system that can generate highly reliable measurement data.

Advantages:

1. No count error occurs even if you move the slider or spindle extremely rapidly.
2. You do not have to reset the system to zero when turning on the system after turning it off*1.
3. As this type of encoder can drive with less power than the incremental encoder, the battery life is prolonged to about 3.5 years (continuous operation of 18,000 hours)*2 under normal use.

*1: Unless the battery is removed
*2: In the case of the ABSOLUTE AOS Digimatic caliper (electromagnetic encoder model)

Measuring Instruments Shipped with Inspection Certificate

Mitutoyo guarantees product quality as a leading precision measuring instrument manufacturer and ships measuring instruments with an inspection certificate that includes inspection data so that customers can use them with confidence. Mitutoyo also calibrates the purchased measuring instrument and issues, for a fee, a calibration certificate that proves traceability to the relevant standard.

* For the meaning of the inspection marks shown at left, refer to the detailed description of each product

Main Unit Startup System

Installation of Main Unit Startup System

As a part of the enhancement of our export control system, the CNC measuring machines (all the CNC Coordinate Measuring Machines, Vision Measuring Systems, and Form Measuring Machines) are equipped with a Main Unit Startup System (relocation detecting system). This system is designed to take a machine out of operation upon detecting the mechanical shock that accompanies relocation. If you intend to relocate a measuring machine fitted with this system, please contact us beforehand so that our service engineers can assist you. On the other hand, the system may be triggered in the event of a natural event such as a powerful earthquake. In this case, our service engineers will deal with the situation at the earliest opportunity.

IP65

IP66

IP67

IP Codes

These are codes that indicate the degree of protection provided (by an enclosure) for the electrical function of a product against the ingress of foreign bodies, dust and water as defined in IEC standards (IEC 60529: 2001) and JIS C 0920: 2003. [IEC: International Electrotechnical Commission]

First characteristic numeral	Degrees of protection against solid foreign objects	
	Brief description	Definition
0	Unprotected	—
1	Protected against solid foreign objects of Sø50 mm and greater	A Sø50 mm object probe shall not fully penetrate enclosure*
2	Protected against solid foreign objects of Sø12.5 mm and greater	A Sø12.5 mm object probe shall not fully penetrate enclosure*
3	Protected against solid foreign objects of Sø2.5 mm and greater	A Sø2.5 mm object probe shall not fully penetrate enclosure*
4	Protected against solid foreign objects of Sø1.0 mm and greater	A Sø1.0 mm object probe shall not fully penetrate enclosure*
5	Protected against dust	Ingress of dust is not totally prevented, but dust that does penetrate must not interfere with satisfactory operation of the apparatus or impair safety.
6	Dust-proof	No ingress of dust allowed.
7	—	
8	—	

*: For details of the test conditions used in evaluating each degree of protection, please refer to the original standard.

Second characteristic numeral	Degrees of protection against water	
	Brief description	Definition
0	Unprotected	—
1	Protected against vertical water drops	Vertically falling water drops shall have no harmful effects.
2	Protected against vertical water drops within a tilt angle of 15 degrees	Vertically falling water drops shall have no harmful effects when the enclosure is tilted at any angle up to 15° on either side of the vertical.
3	Protected against spraying water	Water sprayed at an angle up to 60° either side of the vertical shall have no harmful effects.
4	Protected against splashing water	Water splashed against the enclosure from any direction shall have no harmful effects.
5	Protected against water jets	Water projected in jets against the enclosure from any direction shall have no harmful effects.
6	Protected against powerful water jets	Water projected in powerful jets against the enclosure from any direction shall have no harmful effects.
7	Protection against water penetration	Ingress of water in quantities causing harmful effects shall not be possible when the enclosure is temporarily immersed in water under standardised conditions of pressure and time.
8	Protected against the effects of continuous immersion in water	Ingress of water in quantities causing harmful effects shall not be possible when the enclosure is continuously immersed in water under conditions which shall be agreed between manufacturer and user but which are more severe than for IPX7.

Dust- and Waterproof IP65
www.tuv.com
ID 0000021605

Safety Dust- and Water-Protected
www.tuv.com
ID 0000007162

Safety Dust- and Water-Protected
www.tuv.com
ID 0000006683

Independent Confirmation of Compliance

IP65, IP66 and IP67 protection level ratings for applicable Mitutoyo products have been independently confirmed by the German certification organisation, TÜV Rheinland.

Metric/Inch

Mitutoyo offers this quality product also in an switchable Metric/Inch version. Please refer to your local Mitutoyo website for detailed information.

Inch/Metric

Mitutoyo offers this quality product also in an switchable Inch/Metric version. Please refer to your local Mitutoyo website for detailed information.

Inch

Mitutoyo offers this quality product also in an Inch version. Please refer to your local Mitutoyo website for detailed information.

Example of Measurement Data Management System Design

A system for recording and analysing measurement results from various Mitutoyo measuring instruments for quality assurance purposes.

Implementation Step 1

Recording measurement results

No more handwriting

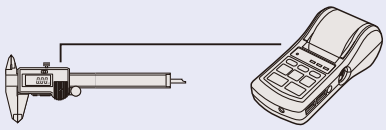

Measurement data can be printed easily. Data can be output to a PC for statistics calculations.

DP-1VR

Direct data input to a PC

Connecting-cable-integrated USB-ITN

USB Input Tool Series

Lineups of three models with different output specifications
IT-012U/IT-005D/IT-007R

Input Tool Series

Connectable to a RS-232C interface PC with 4 channels and a sequencer

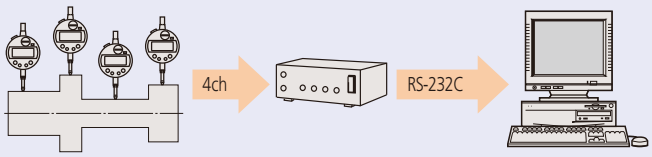

Multiplexer MUX-10F

Wireless

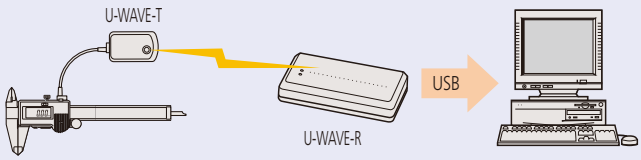

U-WAVE

Implementation Step 2

Software dedicated to inspection and quality control

Inspection certificate creation

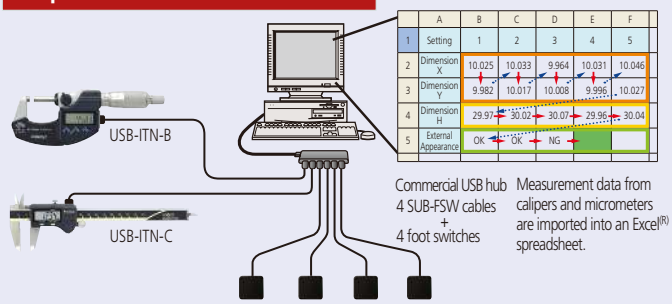

	A	B	C	D	E	F
1	Setting	1	2	3	4	5
2	Dimension X	10.025	10.033	9.964	10.031	10.046
3	Dimension Y	9.982	10.017	10.008	9.996	10.027
4	Dimension H	29.97	30.02	30.07	29.96	30.04
5	External Appearance	OK	OK	NG		

USB-ITPAK

Statistical process control

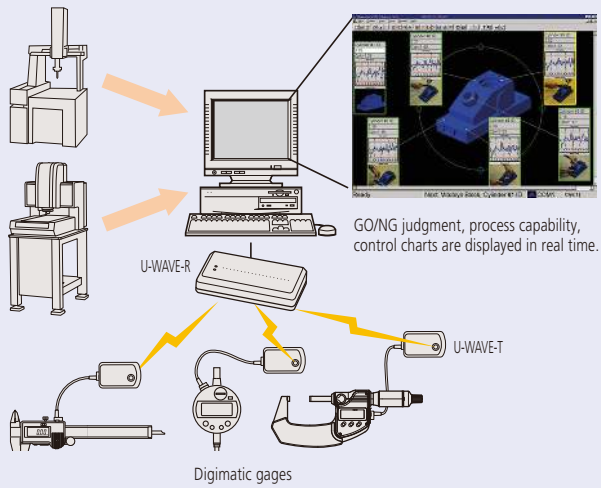

GO/NG judgment, process capability, control charts are displayed in real time.

MeasurLink

All products to be sold to commercial customers.
Product illustrations are without obligation. Product descriptions, in particular any and all technical specifications, are only binding when explicitly agreed upon.

Implementation Step 3

Creating a quality control network covering a wide area within the factory

Unify management of the quality test using the network in the factory

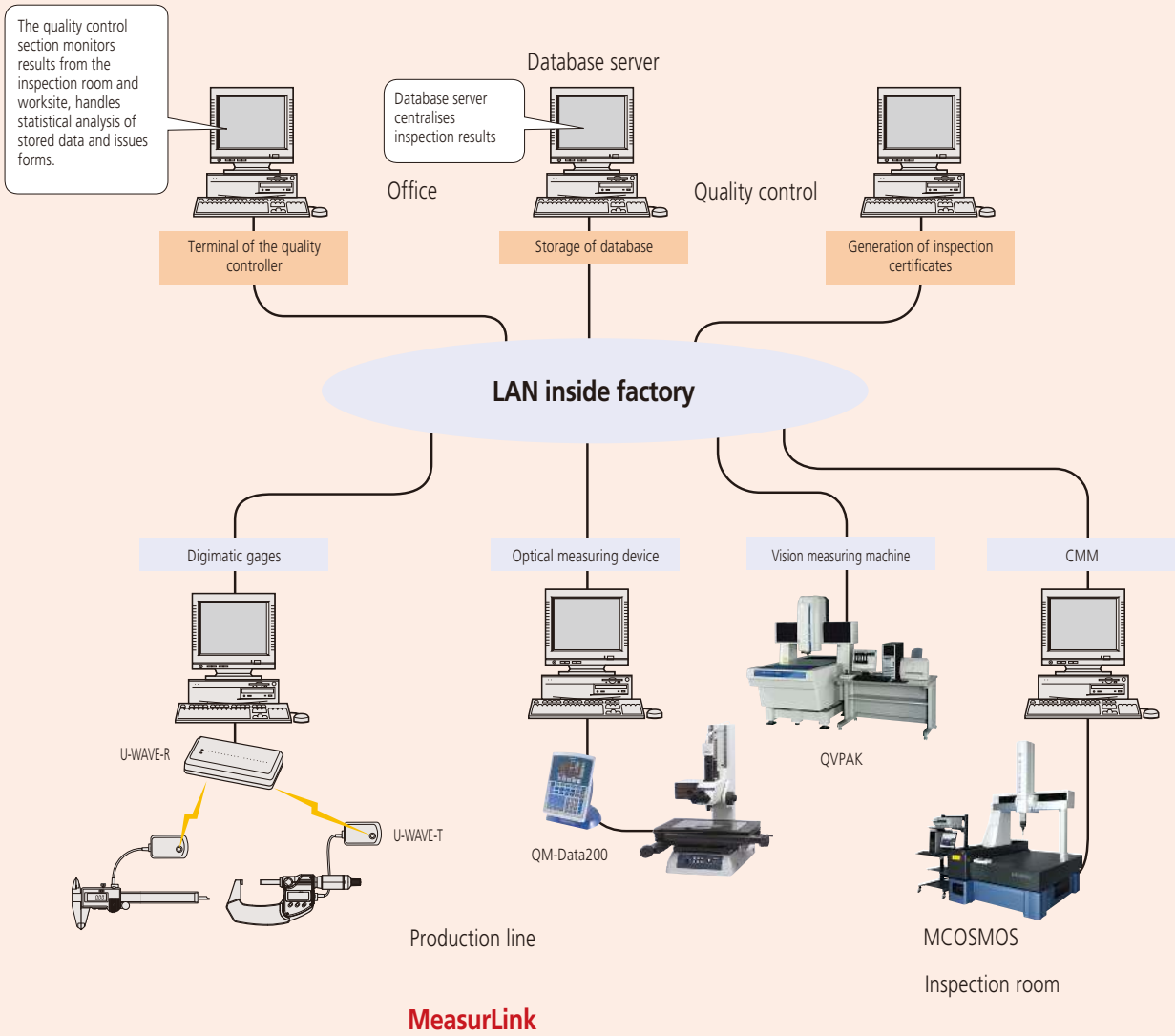

All products to be sold to commercial customers.
Product illustrations are without obligation. Product descriptions, in particular any and all technical specifications, are only binding when explicitly agreed upon.

Mitutoyo

Quality Management Software
Page 15

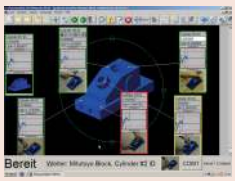

Digimatic Mini Processors
Page 22

Signal Cables
Page 23

Wireless Communication System U-WAVE
Page 26

Digimatic Interface
Page 30

Timerbox, Digimatic Switch Box, Tolerance Box
Page 35

All products to be sold to commercial customers.
Product illustrations are without obligation. Product descriptions, in particular any and all technical specifications, are only binding when explicitly agreed upon.

MeasurLink 9

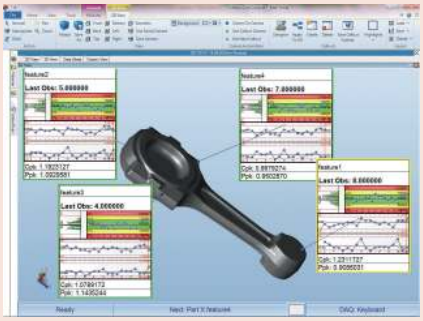

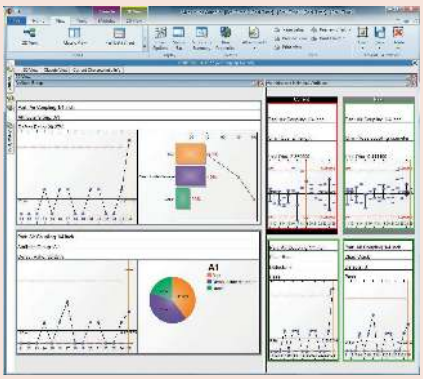

An Integrated Solution for Quality Data Management

Most of Mitutoyo's electronic instruments can output data via optional connecting cables or wireless transmitters & receivers in the form of the Digimatic code. The Digimatic code can also be converted in RS-232C format by any of several available gage multiplexers. In this way, digital data can be sent to PCs for data acquisition and advanced statistical analysis.

As a client/server application, MeasurLink gives you the performance you need through distributed processing. Combined with a multi-user relational database, MeasurLink delivers a safe and organized data warehousing system making quality data available for viewing and analysis by any member of the production, engineering and managerial staff throughout your company. Inspection in the factory produces data for analysis, corrective action, and various reporting needs. As the backbone of your quality efforts, MeasurLink is guaranteed to reduce your production costs and increase your buttom line.

MeasurLink is capable of linking and managing multiple "islands" of inspection into a common database of part information, statistical data, gage information, process, etc. Information is shared across an entire manufacturing facility.

Group Licensing

MeasurLink is available in several modules offering you a wide range of solutions, from data acquisition to manager views and gage management. Details about all modules can be found on the next pages. However, you can create your own package and combine modules by choosing one of the following license bundles:

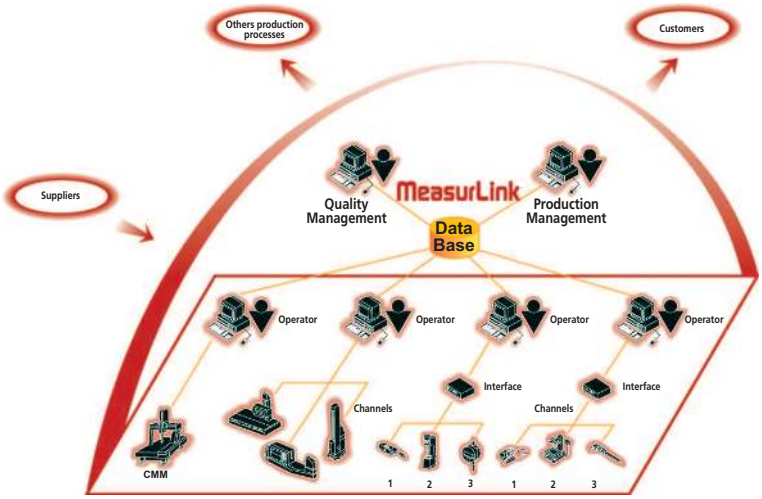

No.	Description
64AAB614R	(R)ML Site License V9, 30 Licenses*
64AAB615R	(R)ML Workgroup License V9, 15 Licenses*
64AAB617R	(R)ML Workgroup License V9, 10 Licenses*
64AAB618R	(R)ML Workgroup License V9, 5 Licenses*
64AAB619R	(R)ML Academic License V9, 20 Licenses*

* Real-Time Professional 3D is not included

Option in addition to workgroup

No.	Description
64AAB614FR	(R)ML Floating License V9, 30 Licenses*
64AAB615FR	(R)ML Floating License V9, 15 Licenses*
64AAB617FR	(R)ML Floating License V9, 10 Licenses*
64AAB618FR	(R)ML Floating License V9, 5 Licenses*
64AAB619FR	(R)ML Floating License V9, 20 Licenses*

* Real-Time Professional 3D is not included

MeasurLink brochure available on request

All products to be sold to commercial customers.
Product illustrations are without obligation. Product descriptions, in particular any and all technical specifications, are only binding when explicitly agreed upon.

Mitutoyo

MeasurLink 9

MeasurLink Real-Time Standard Edition

Designed for customers who want to aquire and analyze data in real-time from Small Tools like calipers and micrometers.

Features:
- Variable and attributive inspection
- Real-time graphics
- Run charts
- Control charts
- Histograms
- Statistics
- Customized Info View
- Full Reporting Template

Supported datasources: keyboard, RS232-C, USB devices

No.	Description
64AAB606R	MeasurLink 9 Real-Time Standard
64AAB606R-U	MeasurLink 9 Real-Time Standard Upgrade

Optional accessories

No.	Description
937179T	Footswitch for SPC
63AAA424	USB-Space Footswitch Interface

MeasurLink Real-Time Professional Edition

On-line Real-Time Data Collection

Acquire data directly from Mitutoyo devices such as:
- Coordinate Measuring Machines
- Form Measuring Instruments
- Vision Measurement Machines

Import data from other devices via:
- ASCII
- QMD (xml based)

Features:
- Variable and attributive inspection
- Real-time graphics
- Run charts
- Control charts
- Histograms
- Statistics
- Customized Info View
- Full Reporting Template
- Data filter

Supported data sources: keyboard, RS232, USB devices, Mitutoyo DDE, ASCII, QMD.

No.	Description
64AAB607R	MeasurLink 9 Real-Time Professional
64AAB607R-U	MeasurLink 9 Real-Time Professional Upgrade

Optional accessories

No.	Description
937179T	Footswitch for SPC
63AAA424	USB-Space Footswitch Interface

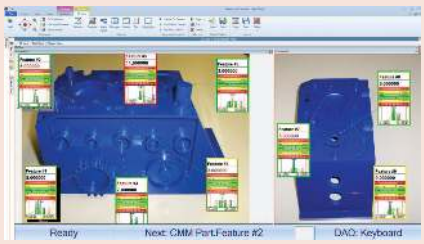

All products to be sold to commercial customers.
Product illustrations are without obligation. Product descriptions, in particular any and all technical specifications, are only binding when explicitly agreed upon.

Optional accessories

No.	Description
63AAA424	USB-Space Footswitch Interface
937179T	Footswitch for SPC

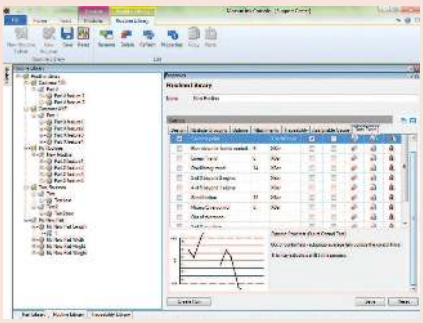

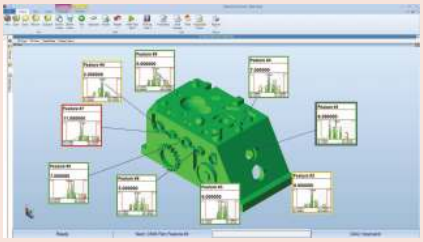

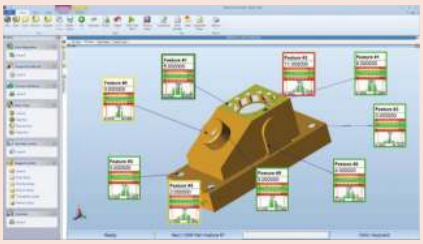

MeasurLink 9

MeasurLink Real-Time Professional 3D Edition

On-line Real-Time Data Collection

Designed for customers who wish to collect data using the Hoops 3D graphics view. Hoops 3D files can be exported from most CAD systems and provide the operator with a real view of the part.
Acquire data directly from Mitutoyo devices such as:
- Coordinate Measuring Machines
- Form Measuring Instruments
- Vision Measurement Machines

Import data from other devices via:
- ASCII
- QMD (xml based)

Features:
- Variable and attributive inspection
- Real-time graphics
- Run charts
- Control charts
- Histograms
- Statistics
- Customized Info View
- Full Reporting Template
- Data filter
- 3D View
- Flexible callout design
- Guided sequence

Supported data sources: keyboard, RS232, USB devices, Mitutoyo DDE, ASCII, QMD.

No.	Description
64AAB608R	MeasurLink 9 Real-Time Professional 3D
64AAB608R-U	MeasurLink 9 Real-Time Professional 3D Upgrade

All products to be sold to commercial customers.
Product illustrations are without obligation. Product descriptions, in particular any and all technical specifications, are only binding when explicitly agreed upon.

MeasurLink 9

MeasurLink Collection Scheduler

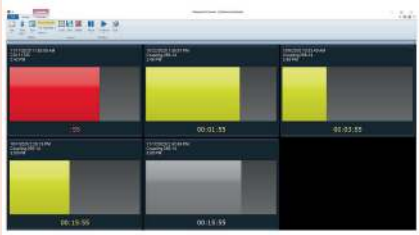

Keep critical measurements on track with MeasurLink Collection Scheduler. Designed for customers that manufacture and measure on a timed measurement schedule, **Collection Scheduler works in conjunction with any Real-Time edition** to alert operators when the next measurement is due with a colorful Andon display and timer. The perfect tool to keep measurements on-time for operators running multiple machines or jobs, the Collection Scheduler timer will reset as soon as measurements have been taken in Real-Time.

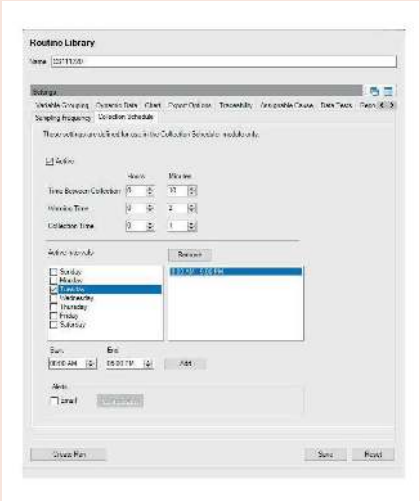

Supervisors can receive email alerts when measurements miss their assigned schedule or simply keep an eye on the entire shop-floor schedule using Process Manager's new Collection Scheduler view.

Features & Benefits

- Colorful Andon Display

Run tiles turn red or yellow if schedules are due or about to be due to help operators easily recognize when measurements need to occur.

- Customized Schedules

Set schedules for each day or shift to suit organizational needs.

- Auto-switch between modules

Select the run due for measurement and automatically launch it in Real-Time.
Suspend the run and automatically return to Collection Scheduler for easy operation.

- Customizable Layout

Set the size and layout of the run tiles to make easy identification when managing multiple runs.

No.	Description
64AAB675R	MeasurLink Collection Scheduler

MeasurLink Process Analyse Professional Edition

Data Analysis Software

Designed for more robust manipulation of Real-Time data in a networked environment.
• Slice and dice data in meaningful ways
• Contribute to quality control initiatives!
• Analyze your process
• Identify problem areas
• Take corrective action
• Improve your product's quality!

Features:
• Review inspection data
• Switch between datbases
• Tree control navigation
• Reporting
• Group, search and sort data
• Merge data
• Scatter plots
• Electronic signatures

No.	Description
64AAB609R	MeasurLink 9 Process Analyzer Professional
64AAB609R-U	MeasurLink 9 Process Analyzer Professional Upgrade

All products to be sold to commercial customers.
Product illustrations are without obligation. Product descriptions, in particular any and all technical specifications, are only binding when explicitly agreed upon.

MeasurLink 9

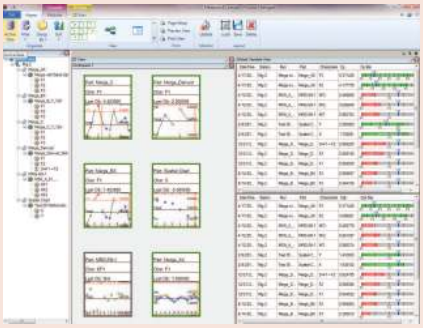

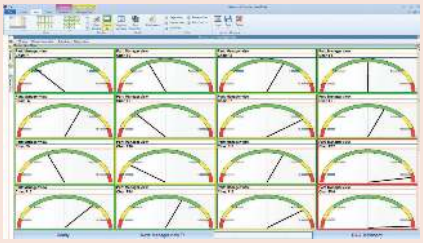

MeasurLink Process Manager Standard Edition

Network Monitoring Software

Real-time monitoring of data as it is collected. The perfect tool for QC and Production Managers!

- Organize and maintain a shop-wide quality program at a glance.
- Audit the entire shop floor inspection activity from a single PC
- Get process information without leaving the office
- View current production across all machines
- Show clients your quality operation for the entire facility
- Establish Cpk thresholds for acceptability
- Stay up to the minute on production problem
- Drill down for details on certain
- tracebility
- assignable cause
- failed tests
- serial numbers

No.	Description
64AAB610R	MeasurLink 9 Process Manager
64AAB610R-U	MeasurLink 9 Process Manager Upgrade

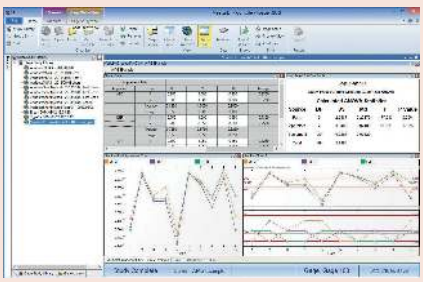

MeasurLink Gage R&R

Gage R and R

Designed according to standard ISO/TS 16949, Gage R&R allows you to use the methods of study AIAG :
- Range
- Average and Range
- Average and Range including part variation
- Variance analisys
- Short method for attributive gages
- Bias study
- Linearity study
- Stability study

Features :
Graphical analysis tools :
- Xbar R chart
- Part by appraiser plot

No.	Description
64AAB611R	MeasurLink 9 Gage R&R
64AAB611R-U	MeasurLink 9 Gage R&R Upgrade

All products to be sold to commercial customers.
Product illustrations are without obligation. Product descriptions, in particular any and all technical specifications, are only binding when explicitly agreed upon.

Mitutoyo

MeasurLink 9

MeasurLink Gage Management

Gage Inventory and Calibration Control

MeasurLink Gage Management allows customers to build a complete gage and fixture inventory. Calibration is made simple by supporting digital gages for both, variable and attributive features. Achieve optimal calibration frequencies - set-up individual calendars with:

- Gage in-service dates
- Calibration recall dates
- Gage R&R dates

Features:

- Vendor contact lists
- User lists
- Print and archive calibration certificates
- Incremental response methods
- Customized gage label printing

No.	Description
64AAB612R	MeasurLink 9 Gage Management
64AAB612R-U	MeasurLink 9 Gage Management Upgrade

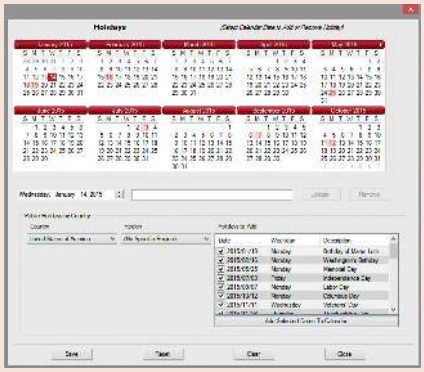

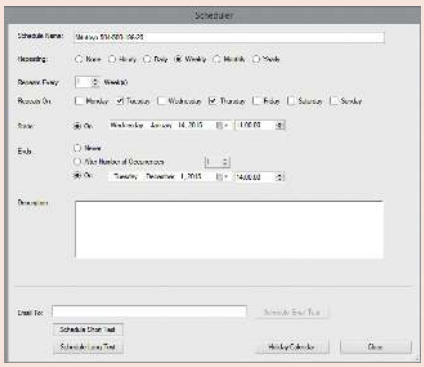

MeasurLink Report Scheduler V9

Report Scheduler Standard Edition is a tool that provides automated report distribution from a Windows service environment. Create reporting tasks that will run on a given schedule.

Reporting Task Type

- Crystal Reports – Select a Crystal Reports template file and database connection to report on. Set values for parameters defined in template.
- MeasurLink Reports – Select a database connection, MeasurLink report template, run or feature run data to report on, and optionally select a filter to be applied to the data.

Destinations

- The reports can be printed, emailed, and exported in formats such as PDF. Multiple destinations can be assigned to a reporting task.

Assign Schedule

- Schedules can be defined on hourly, daily, weekly, monthly, and yearly intervals. Define a schedule and assign it to a report task.

View Reports

- Previewing the report allows validation of the output before scheduling the report task.

No.	Description
64AAB613R	MeasurLink 9 Report Scheduler
64AAB613R-U	MeasurLink 9 Report Scheduler Upgrade

All products to be sold to commercial customers.
Product illustrations are without obligation. Product descriptions, in particular any and all technical specifications, are only binding when explicitly agreed upon.

USB-ITPAK

Series 06AFM

- USB-ITPAK is a setting and data collection software for collection data from measuring instruments with Digimatic/Digimatic 2 output for entry to Microsoft® Excel®.
- USB Input Tool Direct cable, U-WAVE Wireless communication system and USB Footswitch adapter can be used to send the data to a Microsoft® Excel® worksheet.

No.	Remarks
06AFM386	Can be used for Wireless Communication (U-WAVE and U-WAVE Bluetooth), USB Input Tool Direct Cable and USB-Input Tool No. 264-16-10

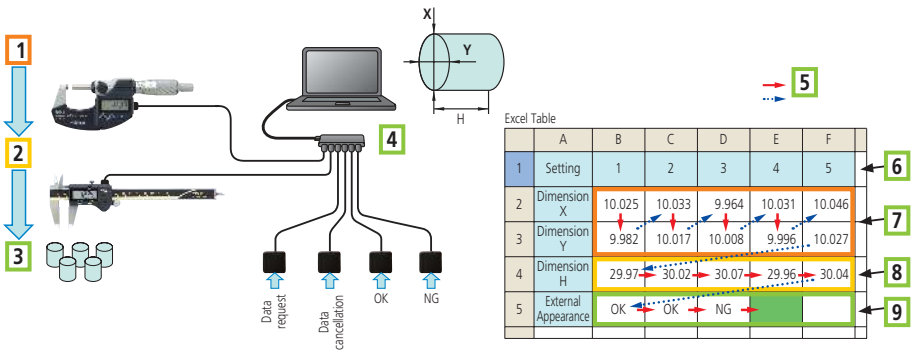

Sequential Measurement

1: Micrometer for diameters X and Y; 2: Caliper for height measurement H; 3: Inspection by attributes OK/NG with foot switch e.g. scratches in the surface; 4: standard USB-Hub; 5 Measurement direction; 6: Workpiece No. 7: Measuring result X/Y; 8: Measuring result H; 9: OK/NG judgement (e.g. scratches)

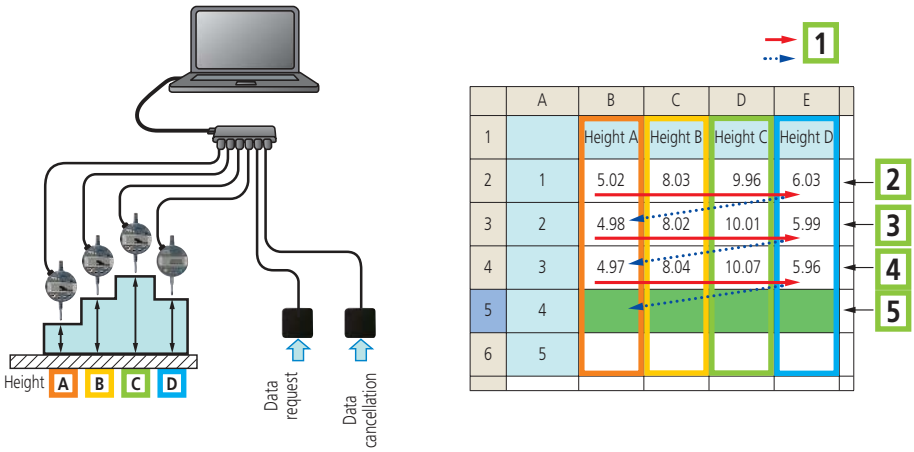

Simultaneous Measurement

1: Measurement direction; 2: First measurement: press foot switch once = 4 complete data batches; 3: second measurement: press foot switch once = 4 complete data batches; 4: third measurement: press foot switch once = 4 complete data batches; 5: is waiting for the next batch measurement

Specifications

OS compatibility	Windows® 2000 Professional (≥SP4), Windows® XP Professional (≥SP2), Windows® XP Home Edition (≥SP2), Windows Vista®/7 (32bit,64bit), Windows® 8, 8.1, 10 (32bit, 64bit)
Applicable MS Excel Version	Microsoft® Excel® 2002/2003/2007/2010/2013/2016
Language for display	English, German, French, Italian, Spanish, Turkish, Czech, Polish, Hungarian, Swedish, Russian, Japanese, Korean, Simplified Chinese, Traditional Chinese
Functions	- setting of Microsoft® Excel® input (workbook, worksheet, cell range a.s.o.) - data collection: USB Input Tool Direct cable wireless communication system U-WAVE - selection of measuring input (sequential, simultaneous, individual) - control of data imput (mouse, foot switch, keyboard) - character string input by foot switch - timer function - measurement time input
Delivered	License Key, Software CD

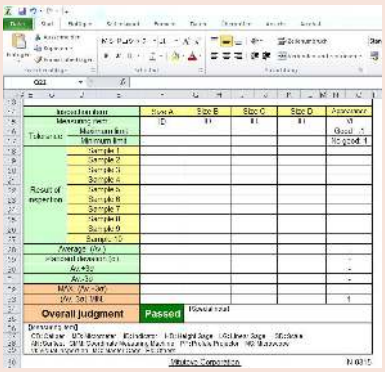

Microsoft® Excel® Worksheet waiting for data

Scan QR Code with your mobile device and watch our product videos on YouTube

All products to be sold to commercial customers.
Product illustrations are without obligation. Product descriptions, in particular any and all technical specifications, are only binding when explicitly agreed upon.

Mitutoyo

Digimatic Mini Processor DP-1VA LOGGER

Series 264

This DP-1VA printer allows you to print measuring data, statistical evaluations a.s.o.

- Digimatic 2 support. 8 digits output for data printing and analysis even from high resolution or long stroke instruments.
- Statistical evaluations, and data printout from calipers, micrometers and other measuring devices equipped with a Digimatic port.
- Excellent printing speed, prints upon one-touch start and at low noise level. The thermosensitive paper has outstanding durability and chemical resistance for long-term storage.
- Timer function for timed measurement data loading
- Easy data transfer from printer to PC. USB (VCP/HID) output for PC (USB IT-PAK Vers. 2,1 or later, MeasurLink, Excel a.s.o.)
- Data Logger Function. Saves up to 1000 data records with time and date. Data can be saved even after the power is turned off.

264-505D

No.	Delivered	Mass [g]
264-505D	With AC adapter, printer paper (1 roll), strap	390

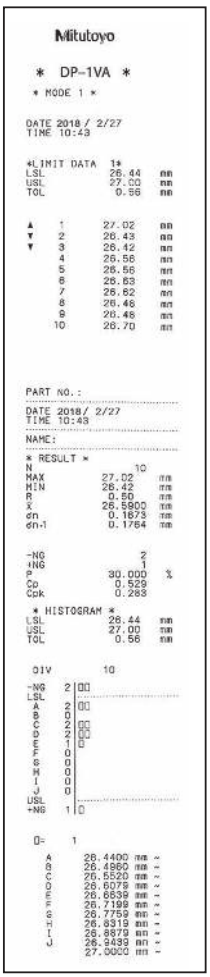

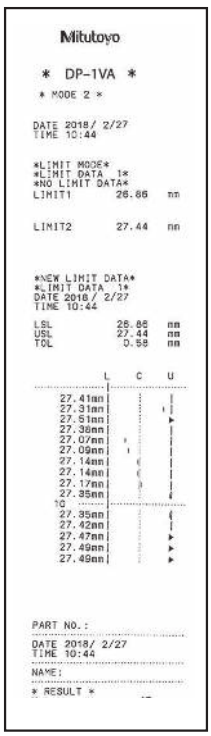

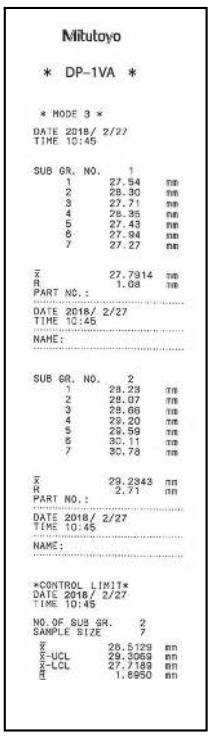

Mode 0

GO/±NG judgment

Modes 1,2

N : Number of data
MAX : Maximum value
MIN : Minimum value
R : Range
$\bar{X}$: Average value
σn : Standard deviation of the sample (N)
σn-1 : Sample standard deviation (N-1)
-NG : Number of data smaller than lower limit value
+NG : Number of data larger than upper limit value
P : Fraction defective
Cp : Process capability index
Cpk : Process capability index (process target centered)

Mode 3

N : Number of data
MAX : Maximum value
MIN : Minimum value
n : Number of subgroup (Max.10)
$\bar{X}$: Average value of subgroup
R : Range of subgroup
$\bar{X}$: Mean value
$\bar{X}$-UCL : Upper control limit
$\bar{R}$: Mean (R control)
R-UCL : Upper control limit (R control)
R-LCL : Lower control limit (R control)

Specifications

Data input	Digimatic, Digimatic 2, RS-232C Input (KA-Counter only)
Printer type	Thermal line printer
Printer speed	6,5 mm/s (using AC adapter)
Printer line number	7000 lines/roll (with large font) 10000 lines/roll (with normal font)
Printer paper	Width: 58 mm, length: 48 m
Processing capacity	Mode 0: 100000 data entries Mode 1/2: 9999 data entries Mode 3: sample size 10x subgroup 9999 = total number of data entries 99990
Logging of the measurement data (to store)	Max. 1000 points
Data output	USB, RS-232C at TTL level, tolerance judgment result (-NG, GO, +NG)
Power supply	AC adapter 6V, battery: LR6 x 4 (alkaline) or AA x 4 Ni-MH (rechargeable, battery is not charged in the device)
Battery life	Appr. 10000 lines (with 1600 mA Ni-MH and print 1 time/5 s)
Timer function	0,25 s; 1 s; 5 s; 30 s; 1 min; 30 min; 60 min (0,25 s only statistical function)

Standard accessories

No.	Description
06AFZ950D	AC-Adapter, 6V 2A, CEE Type, Germany (Europe)
09EAA069D	Thermal Printer Paper DP1-VR/-VA, 1 Roll

Optional accessories

No.	Description
06AFM386	USB-ITPAK Version 2.1, Software with Dongle
09EAA084	RS-232C Cable, DP-1VR/VA to PC, 1m, 9 Pin Connector
06AFZ050	USB Cable 1m
965516	GO/±NG judgement cable, for external device, 2m
09EAA094	RS-232C Cable, DP1-VR/-VA to KA-Counter, 1m, 25 Pin Connector
937179T	Footswitch for SPC
09EAA082-5	Thermal Printer Paper DP1-VR/-VA, 5 Rolls
011037	Battery, LR6, 1,5V, 4 pcs.

09EAA084 and 965516 can not be used simultaneously.

All products to be sold to commercial customers.
Product illustrations are without obligation. Product descriptions, in particular any and all technical specifications, are only binding when explicitly agreed upon.

USB Input Tool Direct (Digimatic-USB Cable)

Series 06AFM

This input tool allows you to directly connect Digimatic measuring devices to a USB interface, without needing additional software.
Measurement data is converted into keyboard codes, enabling interaction with any program such as Microsoft® Excel® working with keyboard entries (HID).

By adding the optional USB-ITPAK software the following additional features are made available.
- Fixed COM assignment in Microsoft® Windows® as channel identification (VCP).
- Creation of worksheets and multi-channel input for measurement values to Microsoft® Excel®.
- Timed data requests.
- 20 Cables can be cascaded via a standard USB hub.

Specifications

Cable length	2 m
Output	USB HID and VCP (with optional software USB-IT-PAK)
OS compatibility	Windows® 2000 Professional (≥SP4), Windows® XP Professional (≥SP2), Windows® XP Home Edition (≥SP2), Windows Vista®/7 (32bit,64bit), Windows® 8, 8 .1, 10 (32bit, 64bit)
Max connectable devices	Microsoft® Windows® 2000, XP: 100 cables, Windows® Vista®, 7, 8, 8. 1, 10: 20 cables

Optional accessories

No.	Description
06AFM386	USB-ITPAK Version 2.1, Software with Dongle
06ADV384	USB Input Tool Direct, Footswitch Adapter
937179T	Footswitch for SPC

06AFM380C

937179T and 06ADV384

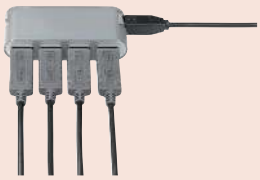

Common USB Hub

06AFM380A

06AFM380B

06AFM380C

06AFM380D

06AFM380E

06AFM380F

06AFM380G

For more information about cable ends see page 21

Scan QR Code with your mobile device and watch our product videos on YouTube

Digimatic USB Cable

No.	Model	Remarks
06AFM380A	A	IP USB Input Tool Direct Cable Straight With Data Switch (2m), e.g. for IP67 Caliper
06AFM380B	B	IP USB Input Tool Direct Cable Back Side With Data Switch (2m); e.g. for IP65 Micrometer
06AFM380F	F	USB Input Tool Direct Cable Straight (2m) e.g. for ID-C/ID-S Indicator
06AFM380E	E	USB Input Tool Direct Cable Round (2m) e.g. for Caliper Gauge Series 209
06AFM380C	C	USB Input Tool Direct Cable Straight With Data Switch (2m); e.g. for Standard Absolute Caliper
06AFM380D	D	USB Input Tool Direct Cable Plain (2m) e.g. for ID-H/ID-F Indicator
06AFM380G	G	IP USB Input Tool Direct Cable ID-N/ID-B (2m)

Advantages of the new Digimatic USB connections

Application	Situation	Software USB-ITPAK	Data format	Remarks
Arbitrary software which expects a keyboard code	Only a USB Input tools signal cable required.	Software is not needed.	Measured value as keyboard format (HID = Human Interface Device)	Foot switch can not be connected.
Commercial statistics software like e.g. Mitutoyo Measur-Link	A USB input tools signal cable and the software USB IT-PAK are required.	For each measuring instrument (cable) a fixedly assigned virtual COM-Port is generated once; afterwards Software USB IT PAK becomes inactive.	MUX-10 Specifiaction (e.g. 01A+138626) with fixed COM assignment as channel identifiction	
Arbitrary software, which expects a keyboard code e.g. Word, txt-format		- Connected measuring instruments and foot switches are selected and assigned. - Terminator is determined. - Procedure is registered as a part program	Transmission of a measured value in text format (VCP = as virtual COM port)	
Microsoft® Excel®		- Connected measuring instruments and foot switches are selected and assigned. - Performs organization of the Microsoft® Excel®-table, i.e. the transferred measured values are written into the pre-defined cells.	Measuring report Microsoft® Excel®-format and character sequence of max. 31 characters (e.g. text input)	

All products to be sold to commercial customers.
Product illustrations are without obligation. Product descriptions, in particular any and all technical specifications, are only binding when explicitly agreed upon.

Digimatic Data Cables

This is an overview of available data cables, and how you can connect measuring devices with data output e.g.to a PC.

The cables listed are used to connect the measuring devices directly via USB (USB Input Tool Direct Cables), indirectly via standard Digimatic cables and interface box (e.g. DMX box or USB Input Tool Box), or the U-WAVE-T wireless transmitters (box version) to a PC.

Please find the appropriate cable for your particular Digimatic measuring instrument in the "Optional Accessories" section of its product entry.

(1) **06AFM380A** (2) **05CZA624** (1 m) **05CZA625** (2 m) (3) **02AZD790A** (Standard) **02AZE140A** (FSW)

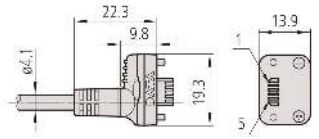

(1) **06AFM380B** (2) **05CZA662** (1 m) **05CZA663** (2 m) (3) **02AZD790B** (Standard) **02AZE140B** (FSW)

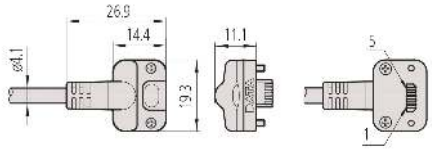

(1) **06AFM380C** (2) **959149** (1 m) **959150** (2 m) (3) **02AZD790C** (Standard) **02AZE140C** (FSW)

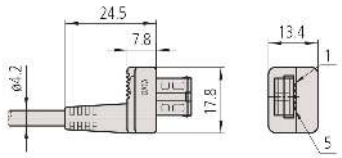

(1) No applicable models (2) **04AZB512** (1 m) **04AZB513** (2 m) (3) No applicable models

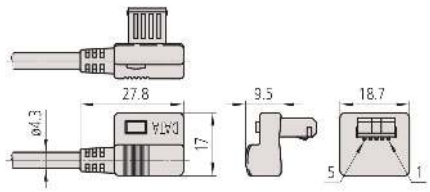

(1) **06AFM380D** (2) **936937** (1 m) **965014** (2 m) (3) **02AZD790D** (Standard) **02AZE140D** (FSW)

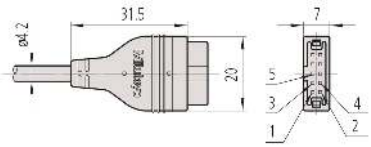

(1) **06AFM380E** (2) **937387** (1 m) **965013** (2 m) (3) **02AZD790E** (Standard) **02AZE140E** (FSW)

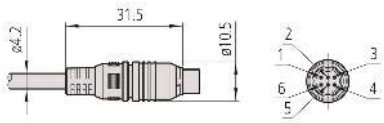

(1) **06AFM380F** (2) **905338** (1 m) **905409** (2 m) (3) **02AZD790F** (Standard) **02AZE140F** (FSW)

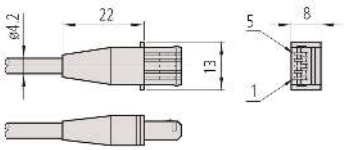

(1) No applicable models (2) **905689** (1 m) **905690** (2 m) (3) No applicable models

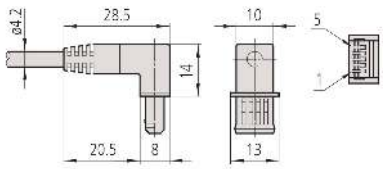

(1) No applicable models (2) **905691** (1 m) **905692** (2 m) (3) No applicable models

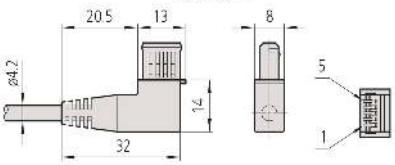

(1) **06AFM380G** (2) **21EAA194** (1 m) **21EAA190** (2 m) (3) **02AZD790G** (Standard) **02AZE140G** (FSW)

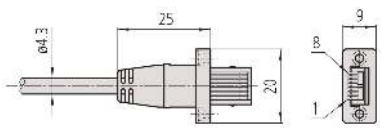

(1)
USB Input Tool Direct Cable
2 m

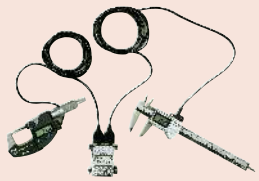

(2)
Standard Digimatic Cable
1 m or 2 m

(3)
U-WAVE Connection Cable
(Standard)

(3)
U-WAVE Connection Cable
with Footswitch Connector
(FSW)

All products to be sold to commercial customers.
Product illustrations are without obligation. Product descriptions, in particular any and all technical specifications, are only binding when explicitly agreed upon.

Digimatic Extension Cables

Series 63

These extension cables allow you to extend Digimatic data cables up to 14 m, extending the working distance between a measuring instrument and an external device such as a PC or DP-1VA Logger/Printer.

63AAA036

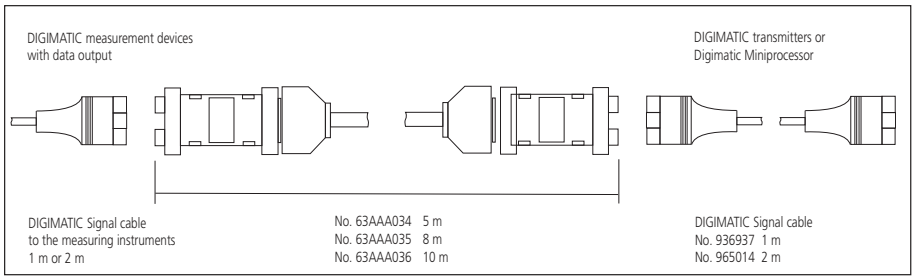

Digimatic Extension Cable

No.	Length [m]
63AAA034	5
63AAA035	8
63AAA036	10

Optional accessories

No.	Description
936937	Digimatic Cable, Flat 10-Pin Type, 1m
965014	Digimatic Cable, Flat 10-Pin Type, 2m

All products to be sold to commercial customers.
Product illustrations are without obligation. Product descriptions, in particular any and all technical specifications, are only binding when explicitly agreed upon.

Mitutoyo

U-WAVE

U-WAVE and U-WAVE fit - Wireless Data transmission system

- Approx. 20 m (within visible range).
- Communication frequency: 2,4GHZ wireless system for reliable and secure data transmission.
- Easy data export to Easy data export to Microsoft® Excel® or other professional SPC software applications like Mitutoyo MeasurLink.
- Transmitter confirms data transfer by a buzzer sound or a red/green LED signal.
- An IP67 transmitter is available.
- Low power consumption: 400000 data transmissions with one battery.
- U-WAVE Event will also support a data request from a PC. This is ideal if the system is installed at an inaccessible side.

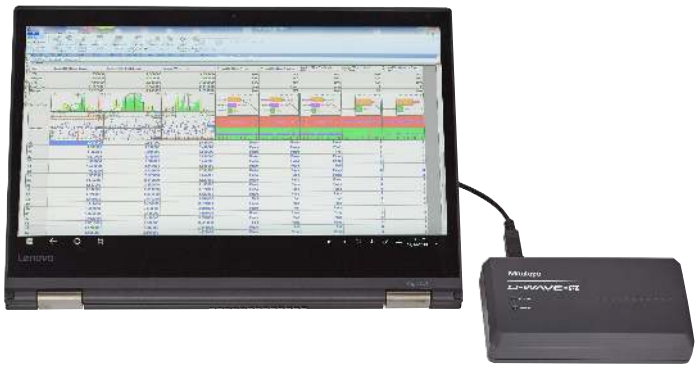

PC with U-WAVE-R (Receiver)

For Caliper U-WAVE-TC (Transmitter) with Connection Unit

For Micrometer U-WAVE-TM (Transmitter) with Connection Unit

For miscellaneous measuring instruments U-WAVE-T (Transmitter) with Connection Cable

Specifications

Wireless communication protocol	Proprietary (2,4 GHz by original specification based on IEEE 802.15.4)
Modulation method	DS-SS (Direct Sequence Spread Spectrum)
Communication distance	Approx. 20 m (within visible range)
Communication speed kbps	250
Communication frequency	2,4 GHz band (2,405-2,475 GHz, 15 channels (5 MHz interval)
Communication with measuring tool	Digimatic (6 digits), Digimatic 2 (8 digits) automatic identification
OS compatibility	Windows® 2000 Professional (≥SP4), Windows® XP Professional (≥SP2), Windows® XP Home Edition (≥SP2), Windows Vista®, Windows® 7 (32bit, 64bit), Windows® 8, 8. 1, 10 (32bit, 64bit)

Standard accessories

No.	Description
05SAA217D	Lithium battery CR-2032, 1 pcs.

Optional accessories

No.	Description
06AFM386	USB-ITPAK Version 2.1, Software with Dongle
02AZF300	Connection Unit, U-WAVE fit, Standard Type
02AZF310	Connection Unit, U-WAVE fit, Waterproof Type
02AZD790A	U-WAVE-T Connection Cable A, with Data Button IP Caliper Type
02AZD790B	U-WAVE-T Connection Cable B, with Data Button IP Micrometer Type
02AZD790C	U-WAVE-T Connection Cable C, Straight, with Data Button
02AZD790D	U-WAVE-T Connection Cable D, Flat 10-Pin Type
02AZD790E	U-WAVE-T Connection Cable E, Round 6-Pin Type
02AZD790F	U-WAVE-T Connection Cable F, Flat Straight Type
02AZD790G	U-WAVE-T Connection Cable G, Flat Straight IP Type
63BAA057	U-WAVE T External Power Supply Adapter
02AZF670	U-WAVE fit Transmitter Mounting Plate, for ID-C and ID-S Digital Indicator
02AZF675	U-WAVE fit Transmitter Mounting Plate, for ID-N Digital Indicator
02AZE200	U-WAVE Transmitter Mounting Plate, Universal Type
02AZE990	U-WAVE Transmitter Mounting Plate, for QM-Height

All products to be sold to commercial customers.
Product illustrations are without obligation. Product descriptions, in particular any and all technical specifications, are only binding when explicitly agreed upon.

U-WAVE

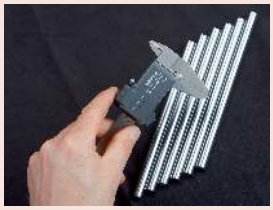

264-620 + 02AZF310
U-WAVE-TC (Transmitter) + Connection Unit

264-622 + 02AZF310
U-WAVE-TM (Transmitter) + Connection Unit

02AZD730G + 02AZD790A
U-WAVE-T (Transmitter) + Connection Cable

02AZF670 + U-WAVE-TM

02AZE200 + U-WAVE-T

U-WAVE-R (Receiver) for all Mitutoyo U-WAVE Transmitter (except U-WAVE Bluetooth)

No.	Remarks	Number of U-WAVE-R units that can be connected to PC	Number of U-Wave-T units that can be connected	Transmission output	Type	Mass [g]
02AZD810D	U-WAVE-R + Software (U-WAVE-PAK)	Up to 16	Up to 100	1 mW (0 dBm) or below	U-WAVE-R	130

U-WAVE-T (Transmitter)

No.	Measuring Instruments	Remarks	Data reception indication	Transmission output	Type	Mass [g]
264-620	100, 150, 200, 300 mm IP67 caliper/standard caliper	IP67	LED (green, red, orange)	2,5 mW (4 dBm) or below	U-WAVE-TC	20
264-621	100, 150, 200, 300 mm IP67 caliper/standard caliper	Standard	Buzzer and LED (green, red, orange)	2,5 mW (4 dBm) or below	U-WAVE-TC	20
264-623	COOLANT PROOF (IP65) micrometer	Standard	Buzzer and LED (green, red, orange)	2,5 mW (4 dBm) or below	U-WAVE-TM	20
264-622	COOLANT PROOF (IP65) micrometer	IP67	LED (green, red, orange)	2,5 mW (4 dBm) or below	U-WAVE-TM	20
02AZD880G	Indicator, 3-Point Inside Micrometer, Carbon Fibre Caliper, Height Gauge, a.s.o	Standard	Buzzer and LED (green, red, orange)	2,5 mW (4 dBm) or below	U-WAVE-T for miscellaneous instruments	23
02AZD730G	Indicator, 3-Point Inside Micrometer, Carbon Fibre Caliper, Height Gauge, a.s.o	IP67	LED (green, red, orange)	2,5 mW (4 dBm) or below	U-WAVE-T for miscellaneous instruments	23

02AZD810D
U-WAVE-R (Receiver)

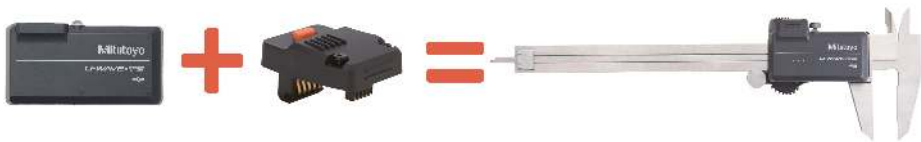

Transmitter and Connection Unit (see next page) for Caliper (U-WAVE-TC + 02AZF300)

Transmitter and Connection Unit (see next page) for Micrometer (U-WAVE-TM + 02AZF310)

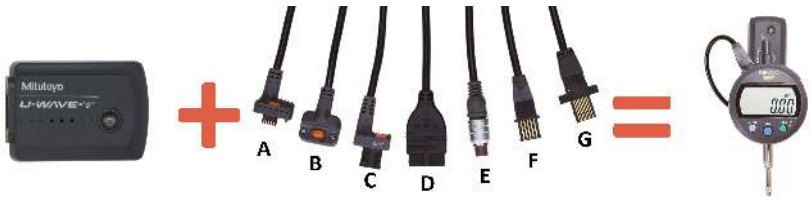

Transmitter and Connection Cables (see next page) e.g. for Digital Indicator

All products to be sold to commercial customers.
Product illustrations are without obligation. Product descriptions, in particular any and all technical specifications, are only binding when explicitly agreed upon.

Mitutoyo

U-WAVE Bluetooth

U-WAVE Bluetooth

- Bluetooth® communication allows for wireless transmission of measurement data from digimatic micrometers and calipers to PCs, smartphones, tablets, and other terminals alike.
- U-WAVE is now available with Bluetooth® wireless technology. With no receiver required, one PC can connect up to seven units with Mitutoyo U-WAVE Bluetooth ®. For tougher shop floor usage, dust / water-proof models are also available.
- Bluetooth® communication not only allows for cost reduction, as it does not require the conventional dedicated receiver unit, but it also improves operability.
- Communication distance of approx. 16 m in an open space and approx. 10 m in a factory environment.
- The application software for transferring measurement data to smartphones, tablets, or PCs

U-WAVEPAK-BM
Available for both Android and IOS, U-WAVEPAK-BM provides users to make use of simple process control with its measurement data import function.
U-WAVEPAK NAVI
Available only for Android U-WAVEPAK NAVI guides you throughout your measurement. By using pictures, the app tells you where and how to measure as well as in what order or what device to use.
U-WAVEPAK-BW
For use on computers, U-WAVEPAK-BW communicates directly with your measuring instrument, allowing you to transfer measurement data to your computer's software. This software can be downloaded for free on our company's website.

264-626 + 02AZF310
U-WAVE-TMB + Connection Unit

264-625 + 02AZF310
U-WAVE-TCB + Connection Unit

No.	Type	Measuring Instruments	Data reception indication	Mass [g]
264-624	U-WAVE-TCB	100, 150, 200, 300 mm IP67 caliper/standard caliper	LED (green, red, orange)	20
264-625	U-WAVE-TCB	100, 150, 200, 300 mm IP67 caliper/standard caliper	Buzzer and LED (green, red, orange)	20
264-627	U-WAVE-TMB	COOLANT PROOF (IP65) micrometer	Buzzer and LED (green, red, orange)	20
264-626	U-WAVE-TMB	COOLANT PROOF (IP65) micrometer	LED (green, red, orange)	20

For details of connectable measuring instruments please contact Mitutoyo or distributor

Specifications

Wireless communication protocol	Bluetooth 4.2 Low Energy
Modulation method	FH-SS (frequency-hopping spread spectrum)
Communication distance	Approx. 16 m (line of sight) Approx. 10 m (in factory environment)
Communication with measuring tool	Digimatic (6 digits), Digimatic 2 (8 digits) automatic identification
Transmission output	3,2 mW (5 dBm) or less (Class 2)

Standard accessories

No.	Description
05SAA217D	Lithium battery CR-2032, 1 pcs.

Optional accessories

No.	Description
02AZF300	Connection Unit, U-WAVE fit, Standard Type
02AZF310	Connection Unit, U-WAVE fit, Waterproof Type
06AFM386	USB-ITPAK Version 2.1, Software with Dongle

U-WAVEPAK-BM available on App Store and Google Play

U-WAVE-NAVI available on Google Play

All products to be sold to commercial customers.
Product illustrations are without obligation. Product descriptions, in particular any and all technical specifications, are only binding when explicitly agreed upon.

U-WAVE-T Connection Cables and Connection Units

Series 02AZD / 02AZE

- This connecting part connects a measuring tool to its U-WAVE T unit. Choose the appropriate cable for your measuring tool from the seven types below, A to G.

Connection unit for U-WAVE fit (transmitter optional)

Connection cable without foot switch connector and transmitter (optional)

Connection cable with foot switch connector and transmitter + foot switch (optional)

1. Connection Unit for U-WAVE fit

No.	Remarks	Mass [g]
02AZF300	For U-WAVE-TC Transmitter e.g. for ABS AOS Standard Caliper	6
02AZF310	For U-WAVE-TC and U-WAVE-TM e.g. IP67 Caliper, COOLANT PROOF (IP65) Micrometer	6

2. Cable without footswitch connector

No.	Model	Remarks	Mass [g]
02AZD790A	A	IP U-WAVE Data Cable Straight with Data Switch e.g. for IP66 Carbon Fibre Caliper	10
02AZD790B	B	IP U-WAVE Data Cable Back Side with Data Switch e.g. for IP65 Holtest	10
02AZD790E	E	U-WAVE Data Cable Round e.g. for Digital Caliper Gauge Series 209	10
02AZD790F	F	U-WAVE Data Cable Straight e.g. for ID-C/ID-S Indidator	10
02AZD790G	G	IP U-WAVE Data Cable e.g. for ID-N/ID-B Indicator	10
02AZD790D	D	U-WAVE Data Cable Plain e.g. for ID-H/ID-F Indicator	10
02AZD790C	C	U-WAVE Data Cable Straight with Data Switch e.g. for Height Gauge	10

3. Cable with footswitch connector

No.	Model	Remarks	Mass [g]
02AZE140B	B	IP U-WAVE Data Cable Back Side with Data Switch/FootSwitch Connector e.g. for IP65 Holtest	34
02AZE140C	C	U-WAVE Data Cable Straight with Data Switch/FootSwitch Connector e.g. for Height Gauge	34
02AZE140D	D	U-WAVE Data Cable Plain with FootSwitch Connector e.g. for ID-H/ID-F Indicator	34
02AZE140E	E	U-WAVE Data Cable Round with FootSwitch Connector e.g. for Digital Caliper Gauge Series 209	34
02AZE140F	F	U-WAVE Data Cable Straight with FootSwitch Connector e.g. for ID-C/ID-S Indicator	34
02AZE140G	G	IP U-WAVE Data Cable with FootSwitch Connector e.g. for ID-N/ID-B Indicator	34
02AZE140A	A	IP U-WAVE Data Cable Straight with Data Switch/FootSwitch Connector e.g. for IP66 Carbon Fibre Caliper	34

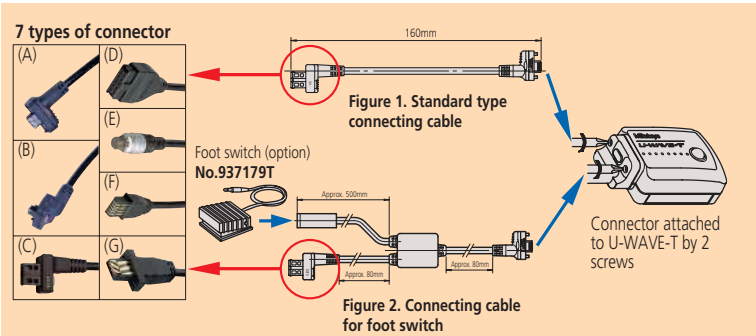

For more information about cable ends see page 21

Standard accessories

No.	Description
02AZD770	Clip for Cable Fixing - U-WAVE T
05CZA619	Screw Driver

Optional accessories

No.	Description
02AZE200	U-WAVE Transmitter Mounting Plate, Universal Type
02AZE990	U-WAVE Transmitter Mounting Plate, for QM-Height
02AZF670	U-WAVE fit Transmitter Mounting Plate, for ID-C and ID-S Digital Indicator
02AZF675	U-WAVE fit Transmitter Mounting Plate, for ID-N Digital Indicator

02AZE200
Holder for U-WAVE-T for Indicator a.s.o.

02AZF670 + U-WAVE-TM + 02AZD790F

02AZF675 + U-WAVE-TM + 02AZD790G

02AZE990
Holder for U-WAVE-T for QM-Height

All products to be sold to commercial customers.
Product illustrations are without obligation. Product descriptions, in particular any and all technical specifications, are only binding when explicitly agreed upon.

Mitutoyo

USB Input Tool

Series 264 - Keyboard Interface

The input tool allows you to directly connect Digimatic measuring devices to a USB interface, without needing additional software.
The USB Input Tool Direct offers the following benefits:

- Measurement data is converted into keyboard codes, enabling interaction with any program working with keyboard entries. (HID)
- You can also connect to a USB with fixed COM assignment in Microsoft Windows as a channel identification (VCP) with USB IT PAK software only.
- The USB-IT PAK software lets you easily create Microsoft Excel worksheets.

No.	Data input	Data output	Output decimal mark	Footswitch connector	Delivered	Mass [g]
264-016-10	1x Digimatic/Digimatic 2	USB Virtual COM-Port (VCP) with USB IT PAK, USB keyboard signal (HID)	Emulates the local setting	Yes	USB cable (1 m)	56

Specifications

Dimensions (WxDxH)	38 x 64 x 21 mm
Power supply	5 V from the USB
Max. connectable devices	Microsoft® Windows® 2000, XP: 100 cables, Windows® Vista®, 7, 8, 8. 1, 10: 20 cables
OS compatibility	Microsoft® Windows® 2000, XP, Vista®, 7, 8, 8. 1, 10 (32bit, 64bit)

Optional accessories

No.	Description
937179T	Footswitch for SPC
06AFM386	USB-ITPAK Version 2.1, Software with Dongle

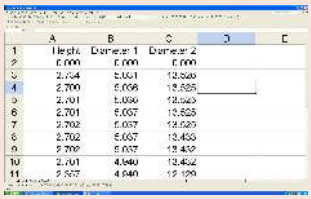

DMX-3T / FS2 USB

Series 63 - Keyboard Interface

- The DMX-3 T/FS2 USB is a keyboard interface that transmits measurement data from measuring instruments equipped with Digimatic interfaces to a PC. Measurement data is converted into keyboard codes, allowing you to easily access it with any program working with keyboard entries, regardless of the operating system. The USB and data conversation interfaces also allow you to directly input the measurement data into a spreadsheet.

63AAA041

rear panel

No.	Data input	Data output	Output decimal mark	Footswitch connector	Mass [g]	Delivered
63AAA041	3 x Digimatic	USB keyboard signal (HID)	point or comma (selectable)	Yes	330	USB cable (1,8 m)

Specifications

Dimensions (WxDxH)	112 x 122 x 45 mm
Timer function	0-99 s (1s step) or 0-99 min
Power supply	5 V from the USB
OS compatibility	Microsoft® Windows® 2000, XP, Vista®, 7, 8, 8. 1, 10 (32bit, 64bit)
Max. no. of cascadable interface	3 via optional link cable

Optional accessories

No.	Description
63AAA105	Link Cabel DMX-3T/FS2
937179T	Footswitch for SPC

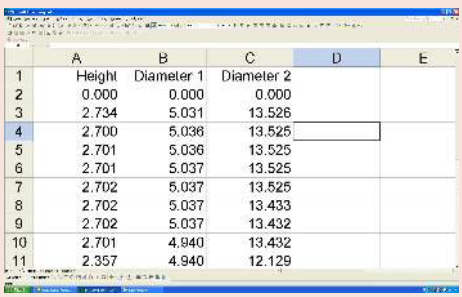

	A	B	C	D	E
1	Height	Diameter 1	Diameter 2		
2	0.000	0.000	0.000		
3	2.734	5.031	13.526		
4	2.700	5.036	13.525		
5	2.701	5.036	13.525		
6	2.701	5.037	13.525		
7	2.702	5.037	13.525		
8	2.702	5.037	13.433		
9	2.702	5.037	13.432		
10	2.701	4.940	13.432		
11	2.357	4.940	12.129		

All products to be sold to commercial customers.
Product illustrations are without obligation. Product descriptions, in particular any and all technical specifications, are only binding when explicitly agreed upon.

DMX-1

Specifications

Dimensions (WxDxH)	58 x 62 x 18 mm

Optional accessories

No.	Description
937179T	Footswitch for SPC
63AAA027	RS-232C Signal Cable, D-Sub9-D-Sub9, 2m

63AAA029

Series 63

This D-SUB9 serial interface is a microcontrolled interface for connecting one single measurement device, with Digimatic output, to the RS-232C interface of a computer. It offers you the following benefits:

- Easily connect a measuring device to a computer's RS-232C serial port.
- No external power supply is needed, as the small level of power needed is supplied by the handshake lines RTS and DTR.

No.	Data input	Data output	Interface cable connection	Footswitch connector	Baud rate	Data bits	Stop bits	Parity
63AAA029	1 x Digimatic	RS-232C	D-SUB 9	Yes	9600	8	1	none

DMX-1 USB

Specifications

Power supply	5 V from the USB
OS compatibility	Microsoft® Windows® 2000, XP, Vista®, 7, 8, 8. 1, 10 (32bit, 64bit)
Dimensions (WxDxH)	33 x 57 x 20 mm

Optional accessories

No.	Description
937179T	Footswitch for SPC

Series 63

- The DMX-1 USB is a micro-controlled interface for connecting 1 Digimatic-output measurement device to the USB interface of a computer. The device appears as a virtual COM-PORT (VCP) to the computer.

63AAA040

rear panel

No.	Data input	Data output	Interface cable connection	Footswitch connector	Baud rate	Data bits	Stop bits	Parity	Delivered
63AAA040	1 x Digimatic	USB virtual COM-Port (VCP)	USB Type Mini-B	Yes	9600	8	1	none	USB cable (1,8 m)

DMX-2 S

Specifications

Dimensions (WxDxH)	58 x 62 x 18 mm

Optional accessories

No.	Description
937179T	Footswitch for SPC
63AAA108	RS-232C Signal Cable, D-Sub-25-D-Sub-9, 2m
63AAA028	Adapter D-Sub25-D-Sub9, 0,2m

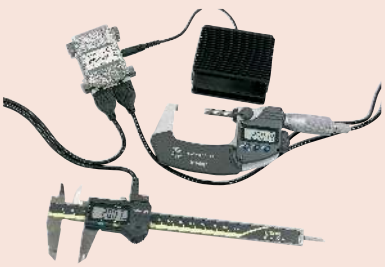

Sample application with footswitch (optional accessory)

Series 63

This DMX-2 S D-SUB5 serial interface is a microcontrolled interface for connecting two measurement devices, with Digimatic output, to the RS-232C serial port of a computer.
The DMX-2 S offers the following benefits:

- Easily connect two measuring devices to a computer's RS-232C serial port.
- No external power supply is needed, as the small level of power needed is supplied by the handshake lines RTS and DTR.

63AAA038

No.	Data input	Data output	Interface cable connection	Footswitch connector	Baud rate	Data bits	Stop bits	Parity
63AAA038	2 x Digimatic	RS-232C	D-SUB 25	Yes	9600	8	1	none

All products to be sold to commercial customers.
Product illustrations are without obligation. Product descriptions, in particular any and all technical specifications, are only binding when explicitly agreed upon.

Mitutoyo

DMX-2 USB

Series 63

Connecting two measurement devices, with Digimatic-output, to a USB port.
The DMX-2 USB offers the following benefits:

- It appears either as a virtual COM-Port (VCP) or as a keyboard (HID) on the computer.
- It has a mode switch available to easily swap between keyboard format (HID) and virtual COM-Port (VCP).

63AAA037

rear panel

No.	Data input	Data output	Interface cable connection	Footswitch connector	Baud rate	Data bits	Stop bits	Parity	Delivered
63AAA037	2 x Digimatic	USB virtual COM-Port (VCP) USB keyboard signal (HID) (switchable on the box)	USB Type Mini-B	Yes	9600	8	1	none	USB cable (1,8 m)

Specifications

Power supply	5 V from the USB
OS compatibility	Microsoft® Windows® 2000, XP, Vista®, 7, 8, 8. 1, 10 (32bit, 64bit)
Output decimal mark (HID)	point or comma
Dimensions (WxDxH)	61 x 76 x 35 mm

Optional accessories

No.	Description
937179T	Footswitch for SPC

DMX-3 USB

Series 63

The DMX-3 3 channel USB VCP interface/ D-SUB9 serial interface is a microcontrolled interface that connects three measurement devices, with Digimatic output, to either the RS-232C serial port or USB port of a computer.
The DMX-3 USB offers the following benefits:

- If the USB output is used, the measuring device will appear as a virtual COM-Port (VCP) on the computer.
- Power is supplied by an AC/DC adapter, which is a standard accessory only required for serial cable D-Sub 9 connection.

63AAA039

rear panel

No.	Data input	Data output	Interface cable connection	Footswitch connector	Baud rate	Data bits	Stop bits	Parity	Delivered
63AAA039	3 x Digimatic	USB virtual COM-Port (VCP), RS-232C	Serial cable: D-SUB 9 or USB: Type B	Yes	1200 or 9600 (adjustable with jumper)	8	1	none	USB cable (1,8 m) AC Adapter (only for serial cable connection)

Specifications

Power supply	5 V from the USB or AC-Adapter (for serial connection)
OS compatibility	Microsoft® Windows® 2000, XP, Vista®, 7, 8, 8. 1, 10 (32bit, 64bit)
Dimensions (WxDxH)	170 x 128 x 55 mm

Optional accessories

No.	Description
63AAA027	RS-232C Signal Cable, D-Sub9-D-Sub9, 2m
937179T	Footswitch for SPC

All products to be sold to commercial customers.
Product illustrations are without obligation. Product descriptions, in particular any and all technical specifications, are only binding when explicitly agreed upon.

MUX-10F

Specifications

Power supply	AC-Adapter, 9V 500mA
Dimensions (WxDxH)	91,4 x 92,5 x 50,4 mm

Optional accessories

No.	Description
12AAA882D	RS-232C Signal Cable, D-Sub9-D-Sub9, 2m, for MUX-10F and Surftest SJ
937179T	Footswitch for SPC

Series 264

The MUX-10F 4 channel D-SUB9 serial interface is a microcontrolled interface that connects four measurement devices, with Digimatic output, to the RS-232C serial port of a computer.

264-002D

rear panel

No.	Data input	Data output	Interface cable connection	Footswitch connector	Baud rate	Data bits	Stop bits	Parity	Delivered
264-002D	4 x Digimatic	RS-232C	D-SUB 9	Yes	300, 600, 1200, 2400, 9600, 19200	8	1	none	AC Adapter

DMX-8/2

Specifications

Power supply	220-240V 50Hz
Dimensions (WxDxH)	158 x 204 x 66 mm

Optional accessories

No.	Description
63AAA027	RS-232C Signal Cable, D-Sub9-D-Sub9, 2m
937179T	Footswitch for SPC

Series 63

The DMX-8/2 8 channel D-SUB9 serial interface is a microcontrolled interface for connecting eight measurement devices, with Digimatic output, to the RS-232C serial port of a computer. The DMX-8/2 model provides power and an ABS/Zero button to operate Series 575 ABS Linear Gauges.

63AAA033

rear panel

No.	Data input	Data output	Interface cable connection	Footswitch connector	Baud rate	Data bits	Stop bits	Parity	Delivered
63AAA033	8 x Digimatic	RS-232C	D-SUB 9	Yes	9600	8	1	none	Power cable

DMX-16 / DMX-16C

Specifications

Power supply	220-240V 50Hz
Dimensions (WxDxH)	225 x 204 x 75 mm

Optional accessories

No.	Description
63AAA027	RS-232C Signal Cable, D-Sub9-D-Sub9, 2m
937179T	Footswitch for SPC

Series 63

- The DMX-16/16C is a micro controlled Interface for connecting 16 Digimatic output measurement devices to the RS-232C interface of a computer
- DMX-16C features integrated microprocessors for data processing, thus enabling simultaneous input and output from all measurement instruments and increasing data processing speed.
- The DMX-16 and DMX-16C provides power and an ABS/ZERO button to operate Series 575 ABS Linear Gauges

63AAA026

rear panel

No.	Type	Data input	Data output	Interface cable connection	Footswitch connector	Baud rate	Data bits	Stop bits	Parity	Delivered
63AAA026	DMX-16	16 x Digimatic	RS-232C	D-SUB 9	Yes	9600	8	1	none	Power cable
63AAA106	DMX-16C	16 x Digimatic	RS-232C	D-SUB 9	Yes	9600	8	1	none	Power cable

All products to be sold to commercial customers.
Product illustrations are without obligation. Product descriptions, in particular any and all technical specifications, are only binding when explicitly agreed upon.

Mitutoyo

DMX-0-1 USB / DMX-3-2 USB

Series 63

These interfaces enable the connection of measuring devices with RS-232C data output (such as the Mitutoyo QM-Data 200 or LH-600) with the USB port of a computer.
The interfaces offer the following benefits:

- The ability to connect over 70 different measuring instruments with RS232C output, this includes not only Mitutoyo devices but other brands as well (a list is available upon request).
- The interface converts the different signals from the connected measuring instruments into the same format: keyboard signal (HID).
- The DMX-0-1 USB has one RS-232C input while the DMX-3-2 has two RS-232C inputs and also 3 Digimatic inputs for connecting Mitutoyo handheld measuring devices.
- The DMX-3-2 additionally has a virtual COM-Port (VCP) with MUX-10 or MUX-50 format.

63AAA043

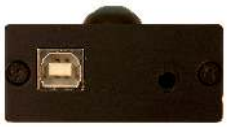

rear panel

63AAA042

rear panel

No.	Data input	Data output	Interface cable connection	Foot-switch connector	Baud rate	Data bits	Stop bits	Parity	Delivered
63AAA043	1 x RS-232C	USB keyboard signal (HID)	USB Type B	Yes					USB cable (1,8 m)
63AAA042	3 x Digimatic 2 x RS-232C	USB virtual COM-Port (VCP), USB keyboard signal (HID)	USB Type B	Yes	9600	8	1	none	USB cable (1,8 m)

Specifications

Timer function	interval 0-99 s or 0-99 min
Mitutoyo measuring instruments with RS232C ouput	KA-Counter Protractor Series 950 EH, EF, EV-Counter Printer DP1-VA Linear Height LH-600 QM-Data 200 Litematic VL-50 Laser Scan Micrometer LSM QM-Height MF-Microscope Series PJ A3000 Projector PJ H30 Projector ID-H Indicator
Power supply	5V from the USB
OS compatibility	Microsoft® Windows® 2000, XP, Vista®, 7, 8, 8. 1, 10 (32bit, 64bit)
Output decimal mark (HID)	point or comma

Optional accessories

No.	Description
63AAA105	Link Cabel DMX-3T/FS2
937179T	Footswitch for SPC

All products to be sold to commercial customers.
Product illustrations are without obligation. Product descriptions, in particular any and all technical specifications, are only binding when explicitly agreed upon.

Digimatic Timerbox

Series 63

This timerbox allows you to connect to the footswitch connector of a Mitutoyo interface to trigger data transfer, based on a time interval.

- It can be used with all Mitutoyo interfaces featuring 3,5 mm TRS Foot switch connectors (Mono) such as USB Input Tool Direct. It works as a time-controlled footswitch.

63AAA107

Sample application with USB Input Tool Direct

No.	Delivered
63AAA107	USB cable (0,8 m), AC Adapter, footswitch cable TTB1 (0,52 m)

Specifications

Power supply	AC-Adapter, 10 V 120 mA or 5 V from the USB
Timer function	1 s-99 h 59 min 59 s (100 h)
Timer tolerance	±8 s/24 h
Dimensions (WxDxH)	55 x 58 x 31 mm
Mass	84 g

Sample application with DMX Box

Optional accessories

No.	Description
936937	Digimatic Cable, Flat 10-Pin Type, 1m
965014	Digimatic Cable, Flat 10-Pin Type, 2m
937179T	Footswitch for SPC

937179T for 63AAA030 only

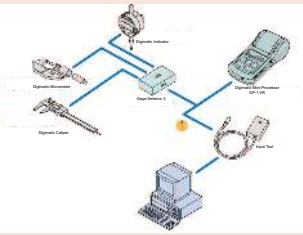

1: cable 936937 (1 m), 965014 (2 m)

Digimatic Switch Box

Series 63/939

This switch box is a distribution box that connects 3-5 Digimatic tools to one channel interface (for example a DMX-1 USB).

63AAA030

939039

No.	Data output	Data input	Footswitch connector	Delivered
63AAA030	1 x Digimatic (1 channel)	5 x Digimatic	Yes	with AC Adapter
939039	1 x Digimatic (1 channel)	3 x Digimatic	No	

Digimatic Tolerance Box

Series 011

It allows you to connect Digimatic measuring instruments for visual -NG/GO/+NG evaluations.

011516

No.	Delivered
011516	with AC Adapter

Specifications

Power supply	AC-Adapter or 2 batteries LR6 (AA)
Dimensions (WxDxH)	117 x 73 x 24 mm

Optional accessories

No.	Description
011037	Battery, LR6, 1,5V, 4 pcs.

All products to be sold to commercial customers.
Product illustrations are without obligation. Product descriptions, in particular any and all technical specifications, are only binding when explicitly agreed upon.

Digimatic Micrometers and Mechanical Micrometers
Page 37

Micrometer Accessories
Page 100

Micrometer Heads
Page 108

Micrometer Head Accessories
Page 130

All products to be sold to commercial customers.
Product illustrations are without obligation. Product descriptions, in particular any and all technical specifications, are only binding when explicitly agreed upon.

High Accuracy Digital Micrometers

Functions	Series 293
ON/OFF	●
Auto Power OFF after 20 min. non use	●
Low voltage alarm	●
Function lock	●
HOLD	●
PRESET	●
Resolution switching	●

Specifications

Display	LCD, character height 7,5 mm
Measuring face	Carbide-tipped, micro-lap finish, Ø 3,2 mm
Measuring spindle	With spindle lock, ø 6,35 mm, spindle pitch 0,5 mm
Scale	Thimble and sleeve satin chrome finish
Power supply	1 lithium battery CR-2032
Battery life	Approx. 2 years
Delivered	Including box, key, driver, 1 battery, heat insulating cover, cleaning paper, certificate of inspection

Optional accessories

No.	Description
05CZA662	Digimatic Cable with Data Button IP Type, 1m, Micrometer Type
05CZA663	Digimatic Cable with Data Button IP Type, 2m, Micrometer Type
06AFM380B	USB Input Tool Direct (Digimatic USB), Digi/Digi2, With Data Button IP Micrometer Type
02AZD880G	U-WAVE-T, Buzzer Type, Wireless Transmitter
02AZD730G	U-WAVE-T, IP67 Type, Wireless Transmitter
02AZD790B	U-WAVE-T Connection Cable B, with Data Button IP Micrometer Type

Consumable spares

No.	Description
05SAA217D	Lithium battery CR-2032, 1 pcs.

0,1 µm digital step

Scan QR Code with your mobile device and watch our product videos on YouTube

Series 293

This Micrometer enables 0,1 µm resolution measurements and is ideal for customers who need to make highly accurate measurements with a hand-held tool (such as Gauge R & R analysis).
The Absolute High-Accuracy Micrometer offers the following benefits:

- It delivers higher accuracy without sacrificing operability, by using Mitutoyo's innovative 0,1 µm resolution ABS (absolute) rotary sensor and high accuracy screw machining technology which reduces instrumental error to just 0,5 µm.
- Its highly rigid frame and high-performance constant-force mechanism (7-9 N) enable more stable measurement.

293-100-10

Metric

No.	Range [mm]	Digital step	Maximum Permissible Error J MPE	Flatness	Parallelism	Measuring force [N]	Mass [g]
293-100-10	0 - 25	0,1 µm / 0,5 µm	±0,5 µm	0,3 µm	0,6 µm	7-9	400

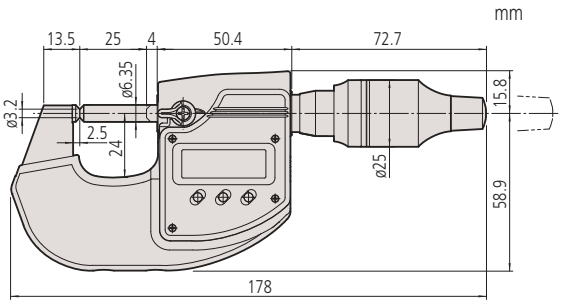

Comparative sizes:
High Accuracy-Micrometer with a highly rigid frame and a common Micrometer with a standard frame

All products to be sold to commercial customers.
Product illustrations are without obligation. Product descriptions, in particular any and all technical specifications, are only binding when explicitly agreed upon.

Digimatic Micrometers QuantuMike IP65

Series 293

This is an IP65 micrometer offering movement four times as fast as a standard micrometer. It presents you with the following benefits:

- Faster measurement is achieved by using a coarser thread which feeds the spindle by 2 mm per thimble rotation.
- Extraordinary battery life of 2,4 years
- Outstanding accuracy
- Ratched thimble mechanism ensures easy single-handed or stand operation.
- Excellent resistance against water and dust (IP65 protection level) enables this micrometer to be used in machining situations that include splashing coolant fluid.

Dust- and Waterproof IP65

Only for 0-25, 25-50 mm

QuantuMike

293-140-30

Coloured speeders

Metric — With data output

No.	Range [mm]	Digital step	Maximum Permissible Error J MPE	Flatness	Parallelism	Measuring force [N]	Mass [g]	L [mm]	a [mm]	b [mm]
293-140-30	0 - 25	0,001 mm	±1 µm	0,3 µm	1 µm	7-12	265	0	6,5	25
293-141-30	25 - 50	0,001 mm	±1 µm	0,3 µm	1 µm	7-12	325	25	7,3	32,5
293-142-30	50 - 75	0,001 mm	±2 µm	0,3 µm	2 µm	7-12	465	50	10,1	47
293-143-30	75 - 100	0,001 mm	±2 µm	0,3 µm	2 µm	7-12	620	75	11,5	60

Metric — Without data output

No.	Range [mm]	Digital step	Maximum Permissible Error J MPE	Flatness	Parallelism	Measuring force [N]	Mass [g]	L [mm]	a [mm]	b [mm]
293-145-30	0 - 25	0,001 mm	±1 µm	0,3 µm	1 µm	7-12	265	0	6,5	25
293-146-30	25 - 50	0,001 mm	±1 µm	0,3 µm	1 µm	7-12	325	25	7,3	32,5
293-147-30	50 - 75	0,001 mm	±2 µm	0,3 µm	2 µm	7-12	465	50	10,1	47
293-148-30	75 - 100	0,001 mm	±2 µm	0,3 µm	2 µm	7-12	620	75	11,5	60

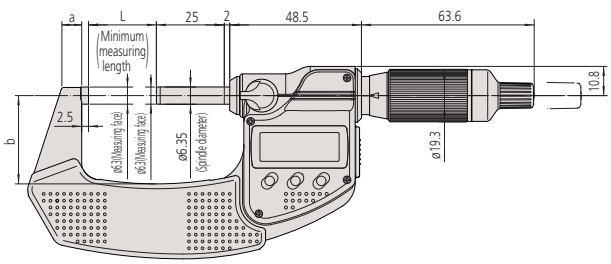

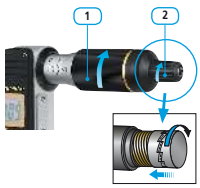

1 : Ratchet on thimble
2 : Ratchet on speeder

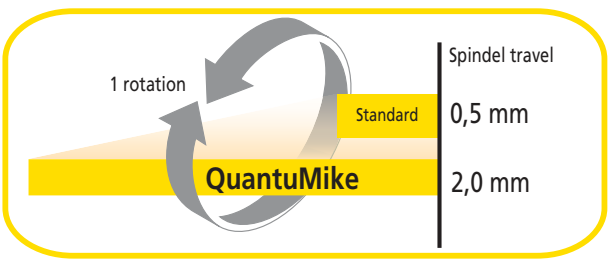

Functions	Series 293
ORIGIN (until 100 mm)	●
ABS / INC (INC ZERO)	●
Auto Power OFF after 20 min. non use	●
Low voltage alarm	●
Function lock	●
HOLD	●

Specifications

Display	LCD, character height 7,5 mm
Measuring face	Carbide-tipped, micro-lap finish
Measuring spindle	With spindle lock, ø 6,35 mm, 2 mm spindle pitch
Scale	Thimble and sleeve satin chrome finish
Power supply	1 battery SR-44
Battery life	Approx. 2,4 years
Delivered	Including box, key, 1 battery, setting standard (from 25 mm upward) certificate of inspection (0-50 mm range)

Optional accessories

No.	Description
05CZA662	Digimatic Cable with Data Button IP Type, 1m, Micrometer Type
05CZA663	Digimatic Cable with Data Button IP Type, 2m, Micrometer Type
06AFM380B	USB Input Tool Direct (Digimatic USB), Digi/Digi2, With Data Button IP Micrometer Type
264-622	U-WAVE fit, IP67 Type, Wireless Transmitter for Micrometer
264-623	U-WAVE fit, Buzzer Type, Wireless Transmitter for Micrometer
264-626	U-WAVE fit Bluetooth, IP67 Type, Wireless Transmitter for Micrometer
264-627	U-WAVE fit Bluetooth, Buzzer Type, Wireless Transmitter for Micrometer
02AZF310	Connection Unit, U-WAVE fit, Waterproof Type
04GAA899	Color Speeder, for Ratchet Thimble Black
04GAA900	Color Speeder, for Ratchet Thimble Red
04GAA901	Color Speeder, for Ratchet Thimble Yellow
04GAA902	Color Speeder, for Ratchet Thimble Green
04GAA903	Color Speeder, for Ratchet Thimble Blue
04AAB208	Color Speeder, For Ratchet Thimble Grey

Consumable spares

No.	Description
938882	Battery SR44 1.5V

With Wireless System U-WAVE fit

All products to be sold to commercial customers.
Product illustrations are without obligation. Product descriptions, in particular any and all technical specifications, are only binding when explicitly agreed upon.

Digimatic Micrometers IP65 Metric

Functions	Series 293 - Individual Range with Data Output
ORIGIN (until 100 mm)	●
ABS / INC (INC ZERO)	●
Auto Power OFF after 20 min. non use	●
Low voltage alarm	●
Function lock	●
HOLD	●
2 x PRESET (over 100 mm)	●

Specifications

Display	LCD, character height 7,5 mm
Measuring face	Carbide-tipped, micro-lap finish
Measuring spindle	With spindle lock, ø 6,35 mm, spindle pitch 0,5 mm
Scale	Thimble and sleeve satin chrome finish
Power supply	1 battery SR-44
Battery life	Approx. 2,4 years, 1,2 years (range >100 mm)
Delivered	Including box, key, 1 battery, setting standard (from 25 mm upward) certificate of inspection (0-50 mm range)

Optional accessories

No.	Description
05CZA662	Digimatic Cable with Data Button IP Type, 1m, Micrometer Type
05CZA663	Digimatic Cable with Data Button IP Type, 2m, Micrometer Type
06AFM380B	USB Input Tool Direct (Digimatic USB), Digi/Digi2, With Data Button IP Micrometer Type
264-622	U-WAVE fit, IP67 Type, Wireless Transmitter for Micrometer
264-623	U-WAVE fit, Buzzer Type, Wireless Transmitter for Micrometer
264-627	U-WAVE fit Bluetooth, Buzzer Type, Wireless Transmitter for Micrometer
264-626	U-WAVE fit Bluetooth, IP67 Type, Wireless Transmitter for Micrometer
02AZF310	Connection Unit, U-WAVE fit, Waterproof Type

Consumable spares

No.	Description
938882	Battery SR44 1.5V

With Wireless System U-WAVE fit

Scan QR Code with your mobile device and watch our product videos on YouTube

Series 293 - Individual Range with Data Output

This IP65 micrometer offers outstanding accuracy, with data output, is highly robust and offers the following benefits:

- Oil-resistant material used for all plastic parts
- Extraordinary battery life of 2,4 years
- Excellent resistance against water and dust enables this micrometer to be used in machining situations that include splashing coolant fluid.

Dust- and Waterproof IP65

Only for 0-25, 25-50 mm

293-234-30 with ratched thimble

293-230-30 with ratched stop

293-252-30

Metric — With ratchet stop

No.	Range [mm]	Digital step	Maximum Permissible Error J MPE	Flatness	Parallelism	Measuring force [N]	Mass [g]
293-230-30	0 - 25	0,001 mm	±1 µm	0,3 µm	1 µm	5-10	270
293-231-30	25 - 50	0,001 mm	±1 µm	0,3 µm	1 µm	5-10	330
293-232-30	50 - 75	0,001 mm	±2 µm	0,3 µm	2 µm	5-10	470
293-233-30	75 - 100	0,001 mm	±2 µm	0,3 µm	2 µm	5-10	625
293-250-30	100 - 125	0,001 mm	±2 µm	0,3 µm	5 µm	5-10	600
293-251-30	125 - 150	0,001 mm	±2 µm	0,3 µm	5 µm	5-10	740
293-252-30	150 - 175	0,001 mm	±3 µm	0,3 µm	5 µm	5-10	800
293-253-30	175 - 200	0,001 mm	±3 µm	0,3 µm	5 µm	5-10	970
293-254-30	200 - 225	0,001 mm	±3 µm	0,3 µm	5 µm	5-10	1100
293-255-30	225 - 250	0,001 mm	±4 µm	0,3 µm	5 µm	5-10	1270
293-256-30	250 - 275	0,001 mm	±4 µm	0,3 µm	5 µm	5-10	1340
293-257-30	275 - 300	0,001 mm	±4 µm	0,3 µm	5 µm	5-10	1540

Metric — With ratchet thimble

No.	Range [mm]	Digital step	Maximum Permissible Error J MPE	Flatness	Parallelism	Measuring force [N]	Mass [g]
293-234-30	0 - 25	0,001 mm	±1 µm	0,3 µm	1 µm	5-10	270
293-235-30	25 - 50	0,001 mm	±1 µm	0,3 µm	1 µm	5-10	330
293-236-30	50 - 75	0,001 mm	±2 µm	0,3 µm	2 µm	5-10	470
293-237-30	75 - 100	0,001 mm	±2 µm	0,3 µm	2 µm	5-10	625

Excellent resistance against water and dust IP65

All products to be sold to commercial customers.
Product illustrations are without obligation. Product descriptions, in particular any and all technical specifications, are only binding when explicitly agreed upon.

Digimatic Micrometers IP65 Metric

Series 293 - Individual Range without Data Output

This IP65 micrometer offers outstanding accuracy, without data output, is highly robust and offers the following benefits:

- Oil-resistant material used for all plastic parts
- Extraordinary battery life of 2,4 years
- Excellent resistance against water and dust enables this micrometer to be used in machining situations that include splashing coolant fluid.

Staub- und Wasserdicht IP65

Only for 0-25, 25-50 mm

293-240-30

293-244-30 with ratchet thimble

Metric

With ratchet stop

No.	Range [mm]	Digital step	Maximum Permissible Error J MPE	Flatness	Parallelism	Measuring force [N]	Mass [g]
293-240-30	0 - 25	0,001 mm	±1 µm	0,3 µm	1 µm	5-10	270
293-241-30	25 - 50	0,001 mm	±1 µm	0,3 µm	1 µm	5-10	330
293-242-30	50 - 75	0,001 mm	±2 µm	0,3 µm	2 µm	5-10	470
293-243-30	75 - 100	0,001 mm	±2 µm	0,3 µm	2 µm	5-10	625

Metric

With ratchet thimble

No.	Range [mm]	Digital step	Maximum Permissible Error J MPE	Flatness	Parallelism	Measuring force [N]	Mass [g]
293-244-30	0 - 25	0,001 mm	±1 µm	0,3 µm	1 µm	5-10	270
293-245-30	25 - 50	0,001 mm	±1 µm	0,3 µm	1 µm	5-10	330
293-246-30	50 - 75	0,001 mm	±2 µm	0,3 µm	2 µm	5-10	470
293-247-30	75 - 100	0,001 mm	±2 µm	0,3 µm	2 µm	5-10	625

Functions	Series 293 - Individual Range without Data Output
ORIGIN (until 100 mm)	●
ABS / INC (INC ZERO)	●
Auto Power OFF after 20 min. non use	●
Low voltage alarm	●
Function lock	●
HOLD	●

Specifications

Display	LCD, character height 7,5 mm
Measuring face	Carbide-tipped, micro-lap finish
Measuring spindle	With spindle lock, ø 6,35 mm, spindle pitch 0,5 mm
Scale	Thimble and sleeve satin chrome finish
Power supply	1 battery SR-44
Battery life	Approx. 2,4 years
Delivered	Including box, key, 1 battery, setting standard (from 25 mm upward) certificate of inspection (0-50 mm range)

Consumable spares

No.	Description
938882	Battery SR44 1.5V

Excellent resistance against water and dust IP65

Scan QR Code with your mobile device and watch our product videos on YouTube

All products to be sold to commercial customers.
Product illustrations are without obligation. Product descriptions, in particular any and all technical specifications, are only binding when explicitly agreed upon.

Digimatic Micrometers IP65 Metric

Functions	Series 293 - Micrometer Set
ORIGIN (until 100 mm)	●
ABS / INC (INC ZERO)	●
Auto Power OFF after 20 min. non use	●
Low voltage alarm	●
Function lock	●
HOLD	●

Specifications

Display	LCD, character height 7,5 mm
Measuring face	Carbide-tipped, micro-lap finish
Measuring spindle	With spindle lock, ø 6,35 mm, spindle pitch 0,5 mm
Scale	Thimble and sleeve satin chrome finish
Power supply	1 battery SR-44
Battery life	Approx. 2,4 years
Delivered	Including box, key, 1 battery, setting standard (from 25 mm upward) certificate of inspection (0-50 mm range)

Optional accessories

No.	Description
05CZA662	Digimatic Cable with Data Button IP Type, 1m, Micrometer Type
05CZA663	Digimatic Cable with Data Button IP Type, 2m, Micrometer Type
06AFM380B	USB Input Tool Direct (Digimatic USB), Digi/Digi2, With Data Button IP Micrometer Type
264-623	U-WAVE fit, Buzzer Type, Wireless Transmitter for Micrometer
264-622	U-WAVE fit, IP67 Type, Wireless Transmitter for Micrometer
264-626	U-WAVE fit Bluetooth, IP67 Type, Wireless Transmitter for Micrometer
264-627	U-WAVE fit Bluetooth, Buzzer Type, Wireless Transmitter for Micrometer
02AZF310	Connection Unit, U-WAVE fit, Waterproof Type

Consumable spares

No.	Description
938882	Battery SR44 1.5V

With Wireless System U-WAVE fit

Series 293 - Micrometer Set

This IP65 Micrometer offers outstanding accuracy, with and without data output, is highly robust and offers the following benefits:

- Oil-resistant material used for all plastic parts
- Extraordinary battery life of 2,4 years
- Excellent resistance against water and dust enables this micrometer to be used in machining situations that include splashing coolant fluid.

Dust- and Waterproof IP65

only for 0-25mm, 25-50mm

293-963-30

Metric

Set/With ratchet stop

No.	Range [mm]	Digital step	Measuring force [N]	Content of Set	Mass [g]
293-966-30	0 - 50	0,001 mm	5-10	293-230-30 / 293-231-30 + setting standard 25 mm (ceramic gauge block grade 1)	1030
293-962-30	0 - 75	0,001 mm	5-10	293-230-30 / 293-231-30 / 293-232-30 + setting standard 25 mm and 50 mm	1640
293-963-30	0 - 100	0,001 mm	5-10	293-230-30 / 293-231-30 / 293-232-30 / 293-233-30 + setting standard 25 mm, 50 mm and 75 mm	2725

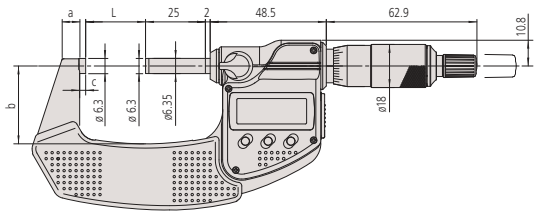

Ratchet stop

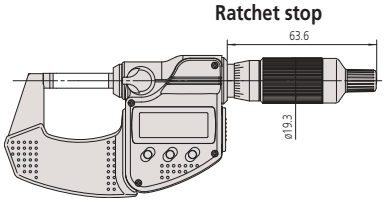

Ratchet thimble

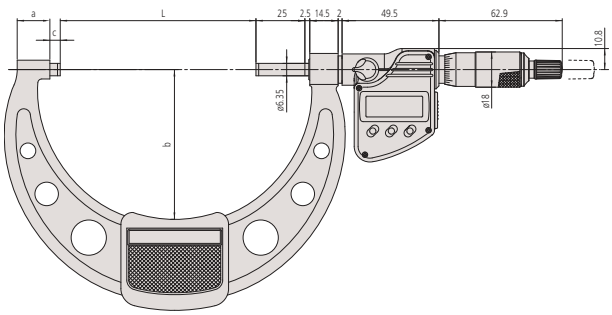

Ratchet stop type over 100 mm

All products to be sold to commercial customers.
Product illustrations are without obligation. Product descriptions, in particular any and all technical specifications, are only binding when explicitly agreed upon.

Mitutoyo

Digimatic Wide Range Micrometers

Series 293

This Wide Measuring Range Digimatic Micrometer with data output offers the following benefits:

- The micrometer's 330° rotatable display unit enables easy reading in all measurement positions.
- With Carbide-tipped measuring faces

293-582

Metric

No.	Range [mm]	Digital step	Maximum Permissible Error J MPE	Flatness	Parallelism	Measuring force [N]	Mass [g]	L [mm]	b [mm]
293-582	300 - 325	0,001 mm	±6 µm	0,6 µm	5 µm	10-14	2000	353	187
293-583	325 - 350	0,001 mm	±6 µm	0,6 µm	5 µm	10-14	2150	378	199
293-584	350 - 375	0,001 mm	±6 µm	0,6 µm	5 µm	10-14	2300	403	212
293-585	375 - 400	0,001 mm	±7 µm	0,6 µm	6 µm	10-14	2450	428	224
293-586	400 - 425	0,001 mm	±7 µm	0,6 µm	6 µm	10-14	2600	453	236
293-587	425 - 450	0,001 mm	±7 µm	0,6 µm	6 µm	10-14	2750	478	248
293-588	450 - 475	0,001 mm	±8 µm	0,6 µm	6 µm	10-14	2900	503	261
293-589	475 - 500	0,001 mm	±8 µm	0,6 µm	7 µm	10-14	3100	528	273

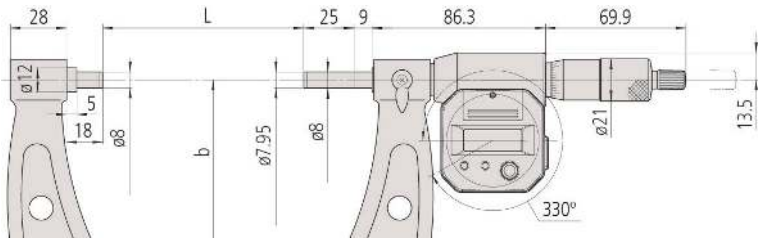

The display is 330° rotatable

Functions	Series 293
ABS / INC (INC ZERO)	■
Auto Power OFF after 20 min. non use	■
Low voltage alarm	■
Function lock	■
HOLD	■
2 x PRESET	■

Specifications

Display	LCD, character height 7,5 mm
Measuring face	Carbide-tipped, micro-lap finish
Measuring spindle	With spindle lock, ø 8 mm, spindle pitch 0,5 mm
Scale	Thimble and sleeve satin chrome finish
Power supply	2 batteries SR-44
Battery life	Approx. 1,8 years
Delivered	Including box, key, setting standard, 2 batteries

Optional accessories

No.	Description
04AZB512	Digimatic Cable with Data Button, 1m, Flat L-Shape Left Type
04AZB513	Digimatic Cable, Straight, Data Button,, 2m, Flat L-Shape Left Type
959149	Digimatic Cable, Straight, Data Button,, 1m
959150	Digimatic Cable, Straight, Data Button,, 2m
06AFM380C	USB Input Tool Direct (Digimatic USB), Digi/Digi2, Straight, with Data Button
02AZD730G	U-WAVE-T, IP67 Type, Wireless Transmitter
02AZD880G	U-WAVE-T, Buzzer Type, Wireless Transmitter
02AZD790C	U-WAVE-T Connection Cable C, Straight, with Data Button

Consumable spares

No.	Description
938882	Battery SR44 1.5V

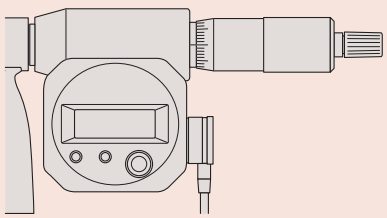

Cable orientation downwards
04AZB512, 04AZB513

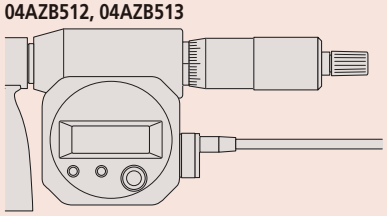

Cable orientation in thimble direction
959149, 959150

All products to be sold to commercial customers.
Product illustrations are without obligation. Product descriptions, in particular any and all technical specifications, are only binding when explicitly agreed upon.

Digimatic Micrometers

Functions	Series 293
ORIGIN	■
Auto Power OFF after 20 min. non use	■
Low voltage alarm	■

Specifications

Display	LCD, character height 7,5 mm
Measuring face	Carbide-tipped, micro-lap finish
Measuring spindle	ø 6,35 mm, spindle pitch 0,5 mm
Scale	Thimble and sleeve satin chrome finish
Power supply	1 battery SR-44
Battery life	Approx. 2,4 years
Delivered	Including box, key, 1 battery, certificate of inspection

Consumable spares

No.	Description
938882	Battery SR44 1.5V

Series 293

This Standard Digimatic Micrometer is an affordable device that offers the following benefits:

- It is cost-effective with simplified functionality for standard applications.
- Extraordinary battery life of 2,4 years. Without data output.
- Constant measuring force

293-821-30

Metric

With ratchet stop

No.	Range [mm]	Digital step	Maximum Permissible Error J MPE	Flatness	Parallelism	Measuring force [N]	Mass [g]
293-821-30	0 - 25	0,001 mm	±2 µm	0,3 µm	1 µm	5-10	275

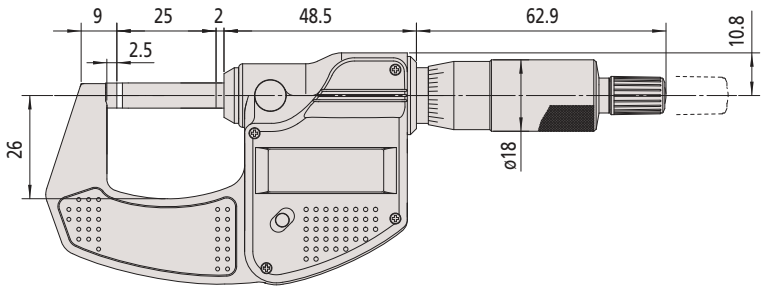

All products to be sold to commercial customers.
Product illustrations are without obligation. Product descriptions, in particular any and all technical specifications, are only binding when explicitly agreed upon.

Digimatic Micrometers with Non-Rotating Spindle

Series 406

This Micrometer features a non-rotating spindle, and offers the following benefits:

- Sliding spindle, not rotating.
- Ratchet stop.
- Data output.

406-250-30

Metric

No.	Range [mm]	Digital step	Maximum Permissible Error J MPE	Flatness	Parallel-ism	Measur-ing force [N]	Mass [g]	L [mm]	a [mm]	b [mm]	c [mm]
406-250-30	0 - 25	0,001 mm	±3 µm	0,3 µm	3 µm	3-8	330	0	7	32	2,8
406-251-30	25 - 50	0,001 mm	±3 µm	0,3 µm	3 µm	3-8	470	25	9,8	47	2,8
406-252-30	50 - 75	0,001 mm	±3 µm	0,3 µm	3 µm	3-8	625	50	11,2	60	2,8
406-253-30	75 - 100	0,001 mm	±4 µm	0,3 µm	3 µm	3-8	460	75	14,6	57	2,3

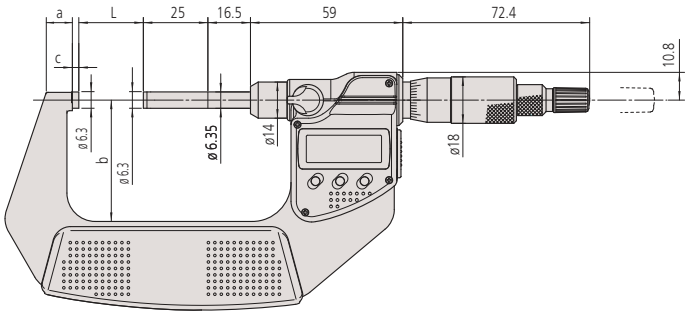

0 - 75 mm

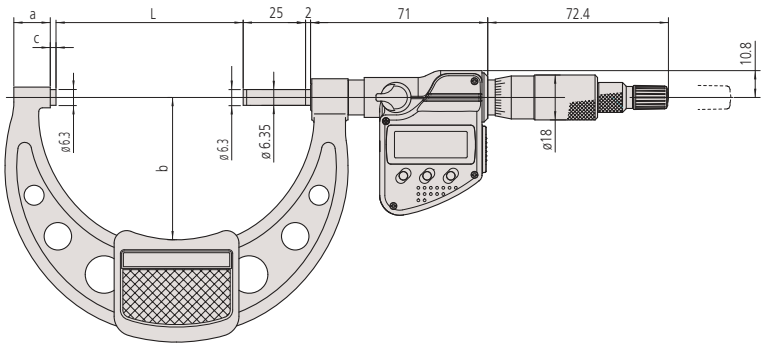

75 - 100 mm

Functions	Series 406
ORIGIN	■
ABS / INC (INC ZERO)	■
Auto Power OFF after 20 min. non use	■
Low voltage alarm	■
Function lock	■
HOLD	■

Specifications

Display	LCD, character height 7,5 mm
Measuring face	Carbide-tipped, micro-lap finish
Measuring spindle	With spindle lock, ø 6,35 mm, spindle pitch 0,5 mm
Scale	Thimble and sleeve satin chrome finish
Power supply	1 battery SR-44
Battery life	Approx. 2,4 years
Delivered	Including box, key, 1 battery, setting standard (from 25 mm upward)

Optional accessories

No.	Description
05CZA662	Digimatic Cable with Data Button IP Type, 1m, Micrometer Type
05CZA663	Digimatic Cable with Data Button IP Type, 2m, Micrometer Type
06AFM380B	USB Input Tool Direct (Digimatic USB), Digi/Digi2, With Data Button IP Micrometer Type
264-622	U-WAVE fit, IP67 Type, Wireless Transmitter for Micrometer
264-623	U-WAVE fit, Buzzer Type, Wireless Transmitter for Micrometer
264-627	U-WAVE fit Bluetooth, Buzzer Type, Wireless Transmitter for Micrometer
264-626	U-WAVE fit Bluetooth, IP67 Type, Wireless Transmitter for Micrometer
02AZF310	Connection Unit, U-WAVE fit, Waterproof Type

Consumable spares

No.	Description
938882	Battery SR44 1.5V

With Wireless System U-WAVE fit

All products to be sold to commercial customers.
Product illustrations are without obligation. Product descriptions, in particular any and all technical specifications, are only binding when explicitly agreed upon.

ABSOLUTE Digimatic Micrometers Quickmike

Series 293

ABSOLUTE®

IP65

This Quickmike, with a non-rotating spindle, delivers much faster movement than standard models.
The ABSOLUTE Digimatic Micrometer Quickmike offers the following benefits:

- With 10 mm feed per revolution, it delivers twenty times as fast as standard devices.
- Excellent resistance against water and dust (IP65) enables this micrometer to be used in machining situations that include splashing coolant fluid.
- ABSOLUTE linear scale means no restriction on adjustment speed.
- Larger measuring range - 30 mm compared with 25 mm - than standard micrometer.

	Series 293
Functions	
ON/OFF	●
ORIGIN	●
ABS / INC (INC ZERO)	●
Low voltage alarm	●
Function lock	●
HOLD	●

Specifications

Display	LCD, character height 10 mm
Measuring face	Carbide-tipped, micro-lap finish
Measuring spindle	Non-rotating, 10 mm spindle feed
Power supply	1 battery SR-44
Battery life	Approx. 5 years
Delivered	Including box, setting standard (from 25 mm upward), 1 battery

Optional accessories

No.	Description
05CZA662	Digimatic Cable with Data Button IP Type, 1m, Micrometer Type
05CZA663	Digimatic Cable with Data Button IP Type, 2m, Micrometer Type
06AFM380B	USB Input Tool Direct (Digimatic USB), Digi/Digi2, With Data Button IP Micrometer Type
02AZD880G	U-WAVE-T, Buzzer Type, Wireless Transmitter
02AZD730G	U-WAVE-T, IP67 Type, Wireless Transmitter
02AZD790B	U-WAVE-T Connection Cable B, with Data Button IP Micrometer Type

Consumable spares

No.	Description
938882	Battery SR44 1.5V

293-666-20 with fixing device 156-101-10 (optional accessories)

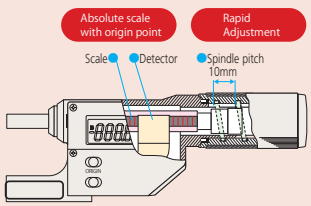

This micrometer has a spindle mechanism enabling a spindle drive of 10 mm/rev.
The drive rate is therefore twenty times as fast as conventional micrometers.

293-666-20

293-667-20

293-668-20

293-669-20

Metric

No.	Range [mm]	Digital step	Maximum Permissible Error J MPE	Flatness	Parallelism	Measuring force [N]	Mass [g]	L [mm]	a [mm]	b [mm]	c [mm]
293-666-20	0 - 30	0,001 mm	±2 µm	0,3 µm	2 µm	5-12	275	0	7	25	2
293-667-20	25 - 55	0,001 mm	±2 µm	0,3 µm	2 µm	5-12	340	25	8,5	36	2,8
293-668-20	50 - 80	0,001 mm	±3 µm	0,3 µm	2 µm	5-12	480	50	10,3	47	2,8
293-669-20	75 - 105	0,001 mm	±3 µm	0,3 µm	3 µm	5-12	585	75	10,7	60	2,8

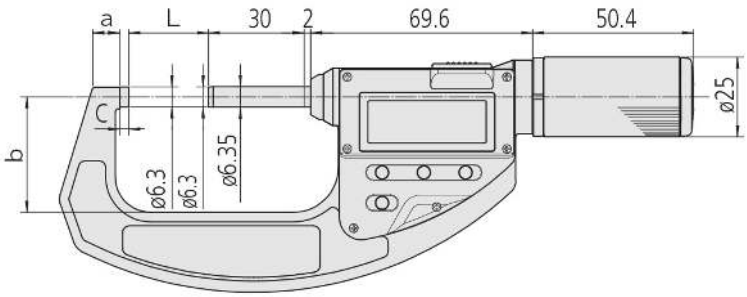

All products to be sold to commercial customers.
Product illustrations are without obligation. Product descriptions, in particular any and all technical specifications, are only binding when explicitly agreed upon.

Mitutoyo

ABSOLUTE Digimatic Micrometers Quickmike

Series 227

ABSOLUTE®

This Quickmike has an adjustable measuring force to suit various kinds of workpieces.
The ABSOLUTE Digimatic Micrometer Quickmike offers the following benefits:

- It's dedicated to applications requiring a constant/low measuring force such as measuring wire, paper and plastic/rubber parts.
- Constant and low measuring force mechanism in the thimble.
- Non-rotating spindle.
- Speedy spindle feed of 10mm/rev.

227-201-20

Metric

No.	Range [mm]	Digital step	Maximum Permissible Error J MPE	Flatness	Parallelism	Measuring force settings [N]	Measuring force accuracy (1) [N]	Mass [g]
227-201-20	0 - 15	0,001 mm	±2 µm	0,3 µm	2 µm	0,5; 1; 1,5; 2; 2,5	±0,1 + (force setting/10)	300
227-203-20	15 - 30	0,001 mm	±2 µm	0,3 µm	2 µm	0,5; 1; 1,5; 2; 2,5	±0,1 + (force setting/10)	380
227-205-20	0 - 10	0,001 mm	±2 µm	0,3 µm	2 µm	2; 4; 6; 8; 10	±0,4 + (force setting/10)	345
227-206-20	10 - 20	0,001 mm	±2 µm	0,3 µm	2 µm	2; 4; 6; 8; 10	±0,4 + (force setting/10)	425
227-207-20	20 - 30	0,001 mm	±2 µm	0,3 µm	2 µm	2; 4; 6; 8; 10	±0,4 + (force setting/10)	415

(1) Only valid for instrument orientation within ±3 degrees of horizontal when measuring.

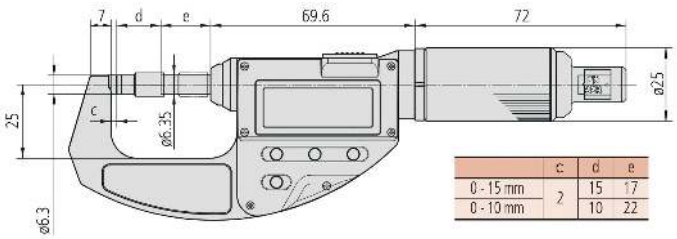

227-201-20, 227-205-20

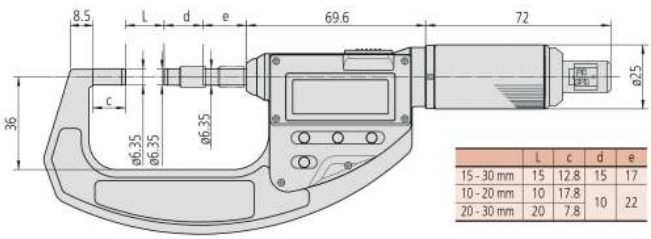

227-203-20, 227-206-20, 227-207-20

	Series 227
Functions	
ON/OFF	●
ABS / INC (INC ZERO)	●
Low voltage alarm	●
HOLD	●
PRESET	●

Specifications

Display	LCD, character height 10 mm
Measuring face	Carbide-tipped, micro-lap finish
Measuring spindle	ø6,35 mm, non-rotating, 10 mm spindle feed
Power supply	1 battery SR-44
Battery life	Approx. 5 years
Delivered	Including box, setting standard (for 10-30 mm models), screwdriver, 1 battery

Optional accessories

No.	Description
05CZA662	Digimatic Cable with Data Button IP Type, 1m, Micrometer Type
05CZA663	Digimatic Cable with Data Button IP Type, 2m, Micrometer Type
06AFM380B	USB Input Tool Direct (Digimatic USB), Digi/Digi2, With Data Button IP Micrometer Type
02AZD880G	U-WAVE-T, Buzzer Type, Wireless Transmitter
02AZD730G	U-WAVE-T, IP67 Type, Wireless Transmitter
02AZD790B	U-WAVE-T Connection Cable B, with Data Button IP Micrometer Type

Consumable spares

No.	Description
938882	Battery SR44 1.5V

All products to be sold to commercial customers.
Product illustrations are without obligation. Product descriptions, in particular any and all technical specifications, are only binding when explicitly agreed upon.

Ratchet Thimble Micrometers

Series 102

This Ratchet Thimble Micrometer has a mechanism that ensures consistent and reliable measurements. It offers you the following benefits:

- It works both from the thimble and the speeder, enabling easy, one-handed operation.
- Ratchet's clearly audible operation provides reassurance that measurements are being taken at a constant, preset measuring force.
- Heat insulating frame

102-701

102-702

Specifications

Measuring face	Carbide-tipped, micro-lap finish
Measuring spindle	With spindle lock, ø 6,35 mm, spindle pitch 0,5 mm
Scale	Thimble and sleeve satin chrome finish ø19 mm
Delivered	Including box, key, setting standard (from 25 mm upward), certificate of inspection

Optional accessories

No.	Description
04GAA899	Color Speeder, for Ratchet Thimble Black
04GAA900	Color Speeder, for Ratchet Thimble Red
04AAB208	Color Speeder, For Ratchet Thimble Grey
04GAA901	Color Speeder, for Ratchet Thimble Yellow
04GAA902	Color Speeder, for Ratchet Thimble Green
04GAA903	Color Speeder, for Ratchet Thimble Blue

Metric

No.	Range [mm]	Graduation	Maximum Permissible Error J MPE	Flatness	Parallelism	Measuring force [N]	Mass [g]
102-701	0 - 25	0,01 mm	±2 µm	0,6 µm	2 µm	5-10	180
102-707	0 - 25	0,001 mm	±2 µm	0,6 µm	2 µm	5-10	180
102-702	25 - 50	0,01 mm	±2 µm	0,6 µm	2 µm	5-10	270
102-708	25 - 50	0,001 mm	±2 µm	0,6 µm	2 µm	5-10	270

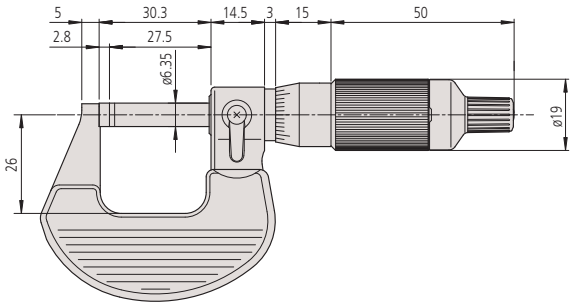

0-25 mm

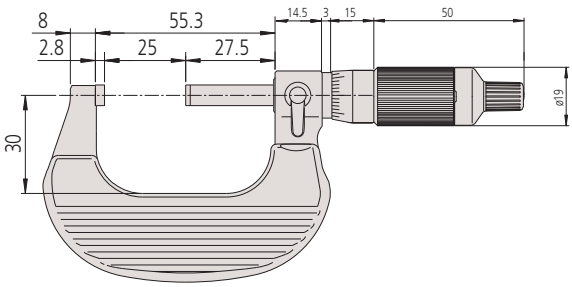

25-50 mm

Coloured ratchet caps (optional accessories)

All products to be sold to commercial customers.
Product illustrations are without obligation. Product descriptions, in particular any and all technical specifications, are only binding when explicitly agreed upon.

Outside Micrometers Metric with Heat Insulating Frame

Series 102

This outside micrometer is an accurate and reliable device that offers you the following benefits:

- Cut-away frame (behind anvil) for measurements in hard-to-reach places
- Ratchet stop delivers a constant measuring force.

Only for 0-25, 25-50 mm

102-301

102-911-40

Specifications

Measuring face	Carbide-tipped, micro-lap finish
Measuring spindle	With spindle lock, ø 6,35 mm, spindle pitch 0,5 mm
Scale	Thimble and sleeve satin chrome finish ø18 mm
Delivered	Including box, key, setting standard (from 25 mm upward), certificate of inspection (0-50 mm range)

Metric

Graduation 0.001 mm is obtained with vernier on sleeve

No.	Range [mm]	Graduation	Maximum Permissible Error J MPE	Flatness	Parallelism	Measuring force [N]	Remarks
102-311	0 - 25	0,001 mm	±1 µm	0,3 µm	2 µm	5-10	Ratched Stop
102-312	25 - 50	0,001 mm	±1 µm	0,3 µm	1 µm	5-10	Ratched Stop
102-313	0 - 25	0,001 mm	±1 µm	0,3 µm	1 µm	5-10	Friction Thimble

No.	Mass [g]	L [mm]	a [mm]	b [mm]	c [mm]
102-311	180	0	5	26	2,5
102-312	270	25	7,8	32	2,5
102-313	180	0	5	26	2,5

Metric

Graduation 0.01 mm

No.	Range [mm]	Graduation	Maximum Permissible Error J MPE	Flatness	Parallelism	Measuring force [N]	Remarks
102-301	0 - 25	0,01 mm	±2 µm	0,6 µm	2 µm	5-10	Ratched Stop
102-302	25 - 50	0,01 mm	±2 µm	0,6 µm	2 µm	5-10	Ratched Stop
102-303	50 - 75	0,01 mm	±2 µm	0,6 µm	2 µm	5-10	Ratched Stop
102-304	75 - 100	0,01 mm	±3 µm	0,6 µm	3 µm	5-10	Ratched Stop

No.	Mass [g]	L [mm]	a [mm]	b [mm]	c [mm]
102-301	180	0	5	26	2,5
102-302	270	25	7,8	32	2,5
102-303	375	50	10,6	45	2,5
102-304	490	75	11	58	2,5

Metric

Micrometer set

No.	Range [mm]	Graduation	Flatness	Measuring force [N]	Content of Set	Remarks	Mass [g]
102-911-40	0 - 100	0,01 mm	0,6	5-10	102-301, 102-302, 102-303, 102-304, 3 setting standards	Ratched Stop	1200

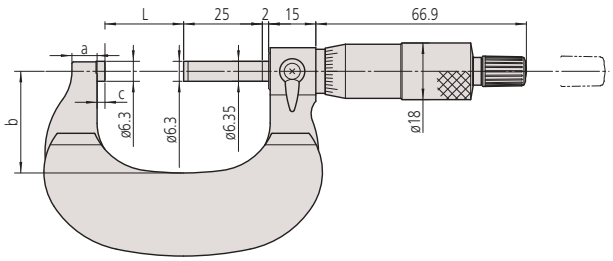

All products to be sold to commercial customers.
Product illustrations are without obligation. Product descriptions, in particular any and all technical specifications, are only binding when explicitly agreed upon.

Analog Outside Micrometers Metric

Series 103

Lightweight workshop design with baked-enamel-finished frame.

Only for 0-25 and 25-50 mm

Specifications

Measuring face	Carbide-tipped, micro-lap finish
Measuring spindle	With spindle lock, spindle pitch 0.5 mm
Scale	Thimble and sleeve satin chrome finish ø18 mm (21 mm models >300 mm)
Delivered	Including box, key, setting standard (from 25 mm upward), certificate of inspection (0-50 mm range)

103-137

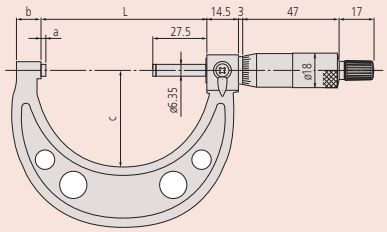

Models up to 50 mm

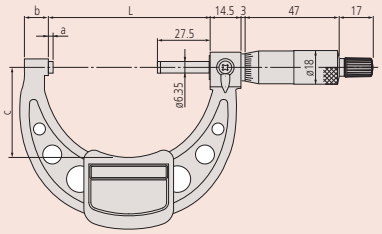

Models 50 mm to 300 mm with insulating plate

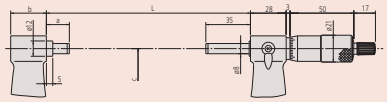

Models over 300 mm

Metric — Graduation 0.001 mm is obtained with vernier on sleeve

No.	Range [mm]	Graduation	Maximum Permissible Error J MPE	Flatness	Parallelism	Measuring force [N]	Mass [g]	L [mm]	a [mm]	b [mm]	c [mm]	d [mm]
103-129	0-25	0,001 mm	±2 µm	0,6 µm	2 µm	5-10	175	30,3	2,8	9	28	6,35
103-130	25-50	0,001 mm	±2 µm	0,6 µm	2 µm	5-10	215	55,3	2,8	10	38	6,35

Metric — Graduation 0.01 mm

No.	Range [mm]	Graduation	Maximum Permissible Error J MPE	Flatness	Parallelism	Measuring force [N]	Mass [g]	L [mm]	a [mm]	b [mm]	c [mm]	d [mm]
103-137	0-25	0,01 mm	±2 µm	0,6 µm	2 µm	5-10	175	30,3	2,8	9	28	6,35
103-138	25-50	0,01 mm	±2 µm	0,6 µm	2 µm	5-10	215	55,3	2,8	10	38	6,35
103-139-10	50-75	0,01 mm	±2 µm	0,6 µm	2 µm	5-10	315	80,3	2,8	12	46	6,35
103-140-10	75-100	0,01 mm	±3 µm	0,6 µm	3 µm	5-10	375	105,3	2,8	14	57	6,35
103-141-10	100-125	0,01 mm	±3 µm	0,6 µm	3 µm	5-10	515	132,8	5,3	17	76	6,35
103-142-10	125-150	0,01 mm	±3 µm	0,6 µm	3 µm	5-10	665	158,2	5,7	19	90	6,35
103-143-10	150-175	0,01 mm	±4 µm	0,6 µm	3 µm	5-10	720	183,6	6,1	20	102	6,35
103-144-10	175-200	0,01 mm	±4 µm	0,6 µm	4 µm	5-10	920	208,8	6,3	19	115	6,35
103-145-10	200-225	0,01 mm	±4 µm	0,6 µm	4 µm	5-10	1080	234,2	6,7	18	127	6,35
103-146-10	225-250	0,01 mm	±5 µm	0,6 µm	4 µm	5-10	1255	258	5,5	18	139	6,35
103-147-10	250-275	0,01 mm	±5 µm	0,6 µm	4 µm	5-10	1405	284	6,5	18	152	6,35
103-148-10	275-300	0,01 mm	±5 µm	0,6 µm	5 µm	5-10	1565	309	6,5	18	166	6,35
103-149	300-325	0,01 mm	±6 µm	1 µm	5 µm	10-15	1985	353	18	28	187	8
103-150	325-350	0,01 mm	±6 µm	1 µm	5 µm	10-15	2155	378	18	28	199	8
103-151	350-375	0,01 mm	±6 µm	1 µm	5 µm	10-15	2305	403	18	28	212	8
103-152	375-400	0,01 mm	±7 µm	1 µm	6 µm	10-15	2455	428	18	28	224	8
103-153	400-425	0,01 mm	±7 µm	1 µm	6 µm	10-15	2715	453	18	28	236	8
103-154	425-450	0,01 mm	±7 µm	1 µm	6 µm	10-15	2965	478	18	28	248	8
103-155	450-475	0,01 mm	±8 µm	1 µm	6 µm	10-15	3215	503	18	28	261	8
103-156	475-500	0,01 mm	±8 µm	1 µm	7 µm	10-15	3450	528	18	28	273	8
103-157	500-525	0,01 mm	±9 µm	1 µm	7 µm	10-15	4060	575	40	28	307	8
103-158	525-550	0,01 mm	±9 µm	1 µm	7 µm	10-15	4080	575	15	28	307	8
103-159	550-575	0,01 mm	±9 µm	1 µm	7 µm	10-15	4500	625	40	28	332	8
103-160	575-600	0,01 mm	±9 µm	1 µm	8 µm	10-15	4525	625	15	28	332	8
103-161	600-625	0,01 mm	±9 µm	1 µm	8 µm	10-15	4915	675	40	28	355	8
103-162	625-650	0,01 mm	±9 µm	1 µm	8 µm	10-15	4930	675	15	28	355	8
103-163	650-675	0,01 mm	±9 µm	1 µm	8 µm	10-15	5200	725	40	28	382	8
103-164	675-700	0,01 mm	±9 µm	1 µm	9 µm	10-15	5215	725	15	28	382	8
103-165	700-725	0,01 mm	±9 µm	1 µm	9 µm	10-15	5835	775	40	28	405	8
103-166	725-750	0,01 mm	±9 µm	1 µm	9 µm	10-15	5860	775	15	28	405	8
103-167	750-775	0,01 mm	±9 µm	1 µm	9 µm	10-15	6385	825	40	28	430	8
103-168	775-800	0,01 mm	±9 µm	1 µm	10 µm	10-15	6410	825	15	28	430	8
103-169	800-825	0,01 mm	±9 µm	1 µm	10 µm	10-15	6925	875	40	28	455	8
103-170	825-850	0,01 mm	±9 µm	1 µm	10 µm	10-15	6940	875	15	28	455	8
103-171	850-875	0,01 mm	±9 µm	1 µm	10 µm	10-15	7565	925	40	28	480	8
103-172	875-900	0,01 mm	±9 µm	1 µm	11 µm	10-15	7590	925	15	28	480	8
103-173	900-925	0,01 mm	±9 µm	1 µm	11 µm	10-15	8215	975	40	28	505	8
103-174	925-950	0,01 mm	±9 µm	1 µm	11 µm	10-15	8240	975	15	28	505	8
103-175	950-975	0,01 mm	±9 µm	1 µm	11 µm	10-15	8860	1025	40	28	530	8
103-176	975-1000	0,01 mm	±9 µm	1 µm	12 µm	10-15	8880	1025	15	28	530	8

All products to be sold to commercial customers.
Product illustrations are without obligation. Product descriptions, in particular any and all technical specifications, are only binding when explicitly agreed upon.

Analog Outside Micrometers in Set

Series 103

Lightweight workshop design with baked-enamel-finished frame.

Only for 0-25 and 25-50 mm

103-913-50

Metric

Micrometer set

No.	Range [mm]	Graduation	Measuring force [N]	Content of Set	Mass [g]
103-927-10	0 - 75	0,01 mm	5-10	103-137, 103-138, 103-139-10, 2 setting standards	750
103-913-50	0 - 150	0,01 mm	5-10	103-137, 103-138, 103-139-10, 103-140-10, 103-141-10, 103-142-10, 5 setting standards	2260
103-915-10	150 - 300	0,01 mm	5-10	103-143-10, 103-144-10, 103-145-10, 103-146-10, 103-147-10, 103-148-10, 6 setting standards	7695
103-914-50	0 - 300	0,01 mm	5-10	103-137, 103-138, 103-139-10, 103-140-10, 103-141-10, 103-142-10103-143-10, 103-144-10, 103-145-10, 103-146-10, 103-147-10, 103-148-10, 11 setting standards	9300

Specifications

Measuring face	Carbide tipped, micro-lap finish
Measuring spindle	ø6,35 mm, spindle pitch 0,5 mm with spindle lock
Delivered	Including box, key, setting standard (from 25 mm upward),

All products to be sold to commercial customers.
Product illustrations are without obligation. Product descriptions, in particular any and all technical specifications, are only binding when explicitly agreed upon.

Digit Outside Micrometers

Series 193

This Digit Outside Micrometer comes with a mechanical counter and offers you the following benefits:

- Mechanical Digit counter
- Quick and error-free reading

193-101

Specifications

Measuring face	Carbide-tipped, micro-lap finish
Measuring spindle	With spindle lock, ø 6,35 mm, spindle pitch 0,5 mm
Scale	Thimble and sleeve satin chrome finish ø18 mm
Delivered	Including box, setting standard (from 25 mm upward), key

193-902

Metric

Graduation 0.001 mm is obtained with vernier on sleeve

No.	Range [mm]	Graduation	Maximum Permissible Error J MPE	Flatness	Parallelism	Measuring force [N]	Mass [g]	L [mm]	a [mm]	b [mm]	c [mm]
193-111	0 - 25	0,001 mm	±2 µm	0,6 µm	2 µm	5-15	224	30	2,5	5	26
193-112	25 - 50	0,001 mm	±2 µm	0,6 µm	2 µm	5-15	275	55	2	8	32
193-113	50 - 75	0,001 mm	±2 µm	0,6 µm	2 µm	5-15	379	80	2	9	45
193-114	75 - 100	0,001 mm	±3 µm	0,6 µm	3 µm	5-15	489	105	2	9	57

Metric

Graduation 0.01 mm

No.	Range [mm]	Graduation	Maximum Permissible Error J MPE	Flatness	Parallelism	Measuring force [N]	Mass [g]	L [mm]	a [mm]	b [mm]	c [mm]
193-101	0 - 25	0,01 mm	±2 µm	0,6 µm	2 µm	5-15	224	30	2,5	5	26
193-102	25 - 50	0,01 mm	±2 µm	0,6 µm	2 µm	5-15	275	55	2	8	32
193-103	50 - 75	0,01 mm	±2 µm	0,6 µm	2 µm	5-15	379	80	2	9	45
193-104	75 - 100	0,01 mm	±3 µm	0,6 µm	3 µm	5-15	489	105	2	9	57

Metric

Micrometer set

No.	Range [mm]	Graduation	Measuring force [N]	Content of Set	Mass [g]
193-901	0 - 75	0,01 mm	5-15	193-101, 193-102, 193-103, 2 setting standards	820
193-902	0 - 100	0,01 mm	5-15	193-101, 193-102, 193-103, 193-104, 3 setting standards	1367

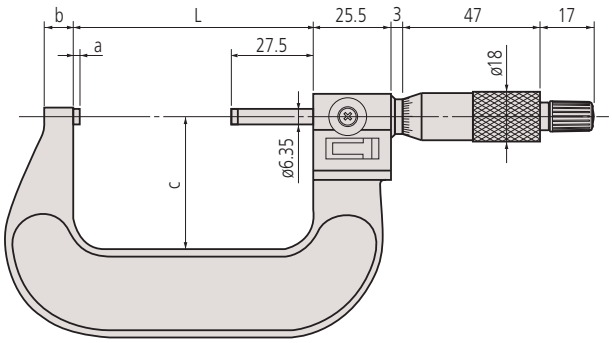

All products to be sold to commercial customers.
Product illustrations are without obligation. Product descriptions, in particular any and all technical specifications, are only binding when explicitly agreed upon.

Mitutoyo

Digimatic Micrometers with Interchangeable Anvils

Series 340

This Digimatic Micrometer offers you an extra wide measuring range, and has the following benefits:

- Easy, interchangeable anvils allow a wide range of measurements.
- Ratchet stop for constant force.

Dust- and Waterproof IP65

IP65 up 300 mm

340-251-30 (IP65 up to 300 mm Range)

340-520 (not IP65 protected >300 mm Range)

Metric

No.	Range [mm]	Digital step	Spindle feed error	Flatness	Parallelism	Measuring force [N]	Setting standard	Interchangeable anvils	Mass [kg]
340-251-30	0 - 150	0,001 mm	3 µm	0,6 µm	2 µm for 0-75 mm 3 µm for 75-150 mm	5-10	5 (25, 50, 75, 100, 125 mm)	6	0.96
340-252-30	150 - 300	0,001 mm	3 µm	0,6 µm	(2+L/100) µm, L = max. range (mm)	5-10	6 (150, 175, 200, 225, 250, 275 mm)	6	1.88
340-520	300 - 400	0,001 mm	3 µm	1 µm	(2+L/100) µm, L = max. range (mm)	10-15	4 (300, 325, 350, 375 mm)	4	2.6
340-521	400 - 500	0,001 mm	3 µm	1 µm	(2+L/100) µm, L = max. range (mm)	10-15	4 (400, 425, 450, 475 mm)	4	4.1
340-522	500 - 600	0,001 mm	3 µm	1 µm	(2+L/100) µm, L = max. range (mm)	10-15	4 (500, 525, 550, 575 mm)	4	5.5
340-523	600 - 700	0,001 mm	3 µm	1 µm	(2+L/100) µm, L = max. range (mm)	10-15	4 (600, 625, 650, 675 mm)	4	6.8
340-524	700 - 800	0,001 mm	3 µm	1 µm	(2+L/100) µm, L = max. range (mm)	10-15	4 (700, 725, 750, 775 mm)	4	8.2
340-525	800 - 900	0,001 mm	3 µm	1 µm	(2+L/100) µm, L = max. range (mm)	10-15	4 (800, 825, 850, 875 mm)	4	9.5
340-526	900 - 1000	0,001 mm	3 µm	1 µm	(2+L/100) µm, L = max. range (mm)	10-15	4 (900, 925, 950, 975 mm)	4	10.9

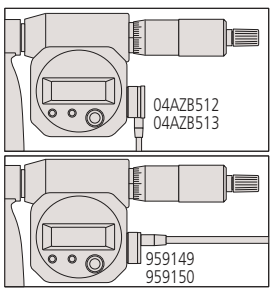

Models over 300 mm

Functions	Series 340
ABS / INC (INC ZERO)	■
Auto Power OFF after 20 min. non use	■
Low voltage alarm	■
Function lock	■
HOLD	■
2 x PRESET	■

Specifications

Display	LCD, character height 7,5 mm
Measuring face	Carbide-tipped spindle, hardened anvil
Measuring spindle	With spindle lock, ø 6,35 mm, ø8 mm (over 300 mm), spindle pitch 0,5 mm
Scale	Thimble and sleeve satin chrome finish
Power supply	Battery SR-44
Battery life	Approx. 2,4 years, 1,8 years (range >300 mm)
Delivered	Including box, setting standard, anvils, key, 1 battery (2 batteries > 300 mm)

Optional accessories

No.	Description
05CZA662	Digimatic Cable with Data Button IP Type, 1m, Micrometer Type
05CZA663	Digimatic Cable with Data Button IP Type, 2m, Micrometer Type
959149	Digimatic Cable, Straight, Data Button,, 1m
959150	Digimatic Cable, Straight, Data Button,, 2m
04AZB512	Digimatic Cable with Data Button, 1m, Flat L-Shape Left Type
04AZB513	Digimatic Cable, Straight, Data Button,, 2m, Flat L-Shape Left Type
06AFM380B	USB Input Tool Direct (Digimatic USB), Digi/Digi2, With Data Button IP Micrometer Type
06AFM380C	USB Input Tool Direct (Digimatic USB), Digi/Digi2, Straight, with Data Button
264-622	U-WAVE fit, IP67 Type, Wireless Transmitter for Micrometer
264-623	U-WAVE fit, Buzzer Type, Wireless Transmitter for Micrometer
02AZF310	Connection Unit, U-WAVE fit, Waterproof Type
02AZD880G	U-WAVE-T, Buzzer Type, Wireless Transmitter
02AZD730G	U-WAVE-T, IP67 Type, Wireless Transmitter
02AZD790C	U-WAVE-T Connection Cable C, Straight, with Data Button

05CZA662, 05CZA663, 06AFM380B,
264-622, 264-623, 02AZF310
for models up to 300 mm
959149, 959150, 04AZB512, 04AZB5130,
6AFM380C, 02AZD730G, 02AZD880G, 02AZD790C
for models over 300 mm

Consumable spares

No.	Description
938882	Battery SR44 1.5V

All products to be sold to commercial customers.
Product illustrations are without obligation. Product descriptions, in particular any and all technical specifications, are only binding when explicitly agreed upon.

Outside Micrometers with Interchangeable Anvils

Specifications

Measuring face	Hardened, lapped (anvil), carbide tipped, lapped (spindle side)
Measuring spindle	With spindle lock, ø 6,35 mm (up to 300 mm) ø8 mm (over 300 mm), spindle pitch 0,5 mm
Scale	Thimble and sleeve satin chrome finish ø18 mm (ø21 mm >300 mm)
Delivered	Including box, setting standard, anvils, key

Series 104

This Outside Micrometer offers you an extra wide measuring range with the following benefits:

- Easy, interchangeable anvils allow a wide range of measurements.

104-171

104-135A

Metric

No.	Range [mm]	Graduation	Spindle feed error	Flatness	Parallelism	Measuring force [N]	Setting standard	Interchangeable anvils	Mass [kg]
104-171	0 - 50	0,01 mm	3 µm	0,6 µm	2 µm	5 - 10	1 (25 mm)	1	0.32
104-139A	0 - 100	0,01 mm	3 µm	0,6 µm	3 µm	5 - 10	3 (25, 50, 75 mm)	4	0.79
104-135A	0 - 150	0,01 mm	3 µm	0,6 µm	2 µm for 0-75 mm 3 µm for 75-150 mm	5 - 10	5 (25, 50, 75, 100, 125 mm)	6	1.35
104-161A	50 - 150	0,01 mm	3 µm	0,6 µm	2 µm for 0-75 mm 3 µm for 75-150 mm	5 - 10	5 (50, 75, 100, 125 mm)	4	1.35
104-140A	100 - 200	0,01 mm	3 µm	0,6 µm	(2+L/100) µm, L = max. range (mm)	5 - 10	4 (100, 125, 150, 175 mm)	4	1.38
104-136A	150 - 300	0,01 mm	3 µm	0,6 µm	(2+L/100) µm, L = max. range (mm)	5 - 10	6 (100, 125, 150, 175, 200, 225 mm)	6	2.65
104-141A	200 - 300	0,01 mm	3 µm	0,6 µm	(2+L/100) µm, L = max. range (mm)	5 - 10	4 (200, 225, 250, 275 mm)	4	2.22
104-142A	300 - 400	0,01 mm	3 µm	1 µm	(2+L/100) µm, L = max. range (mm)	10 - 14	4 (300, 325, 350, 375 mm)	4	3.31
104-143A	400 - 500	0,01 mm	3 µm	1 µm	(2+L/100) µm, L = max. range (mm)	10 - 14	4 (400, 425, 450, 475 mm)	4	4.81
104-144A	500 - 600	0,01 mm	3 µm	1 µm	(2+L/100) µm, L = max. range (mm)	10 - 14	4 (500, 525, 550, 575 mm)	4	6.35
104-145A	600 - 700	0,01 mm	3 µm	1 µm	(2+L/100) µm, L = max. range (mm)	10 - 14	4 (600, 625, 650, 675 mm)	4	7.72
104-146A	700 - 800	0,01 mm	3 µm	1 µm	(2+L/100) µm, L = max. range (mm)	10 - 14	4 (700, 725, 750, 775 mm)	4	9.08
104-147A	800 - 900	0,01 mm	3 µm	1 µm	(2+L/100) µm, L = max. range (mm)	10 - 14	4 (800, 825, 850, 875 mm)	4	10.41
104-148A	900 - 1000	0,01 mm	3 µm	1 µm	(2+L/100) µm, L = max. range (mm)	10 - 14	4 (900, 925, 950, 975 mm)	4	11.78

All products to be sold to commercial customers.
Product illustrations are without obligation. Product descriptions, in particular any and all technical specifications, are only binding when explicitly agreed upon.

Mitutoyo

Outside Micrometers with Anvil Extension Collars

Series 105 - 500 mm to 1000 mm Range

This Outside Micrometer comes with Extension Anvil Collars.
It offers you the following benefits:

- The collars have a stable and rugged yet lightweight tube construction, and are ideal for large micrometers.
- The 50mm spindle stroke gives you extended range compared to standard spindle types.
- Anvil collars extend the measuring range even further.
- The setting standards supplied cover the whole measuring range.

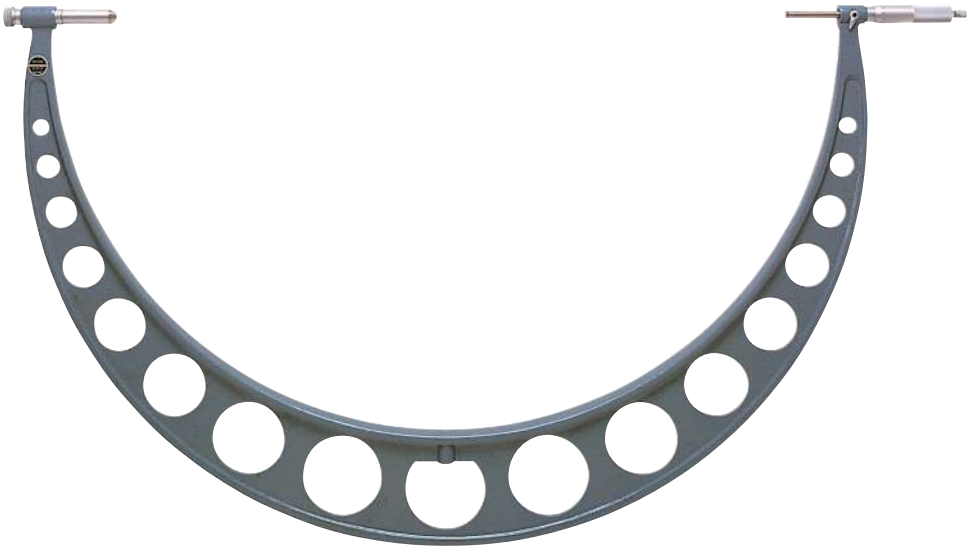

105-105

Metric

Extension Collar: 50 mm

No.	Range [mm]	Graduation	Spindle feed error	Flatness	Parallelism	Measuring force [N]	Extension collar	Mass [kg]
105-103	500 - 600	0,01 mm	6 µm	1,3 µm	8 µm	5-10	50 mm	5.53
105-104	600 - 700	0,01 mm	6 µm	1,3 µm	9 µm	5-10	50 mm	6.35
105-105	700 - 800	0,01 mm	6 µm	1,3 µm	10 µm	5-10	50 mm	7.17
105-106	800 - 900	0,01 mm	6 µm	1,3 µm	11 µm	5-10	50 mm	7.99
105-107	900 - 1000	0,01 mm	6 µm	1,3 µm	12 µm	5-10	50 mm	8.81

Specifications

Scale	Thimble and sleeve satin chrome finish ø21 mm
Measuring face	Carbide-tipped, micro-lap finish
Delivered	Including box, setting standards

Anvil extension collar

All products to be sold to commercial customers.
Product illustrations are without obligation. Product descriptions, in particular any and all technical specifications, are only binding when explicitly agreed upon.

Outside Micrometers with Anvil Extension Collars

Specifications

Measuring face	Carbide-tipped, micro-lap finish
Measuring spindle	With spindle lock, Ø 8 mm spindle pitch 0,5 mm
Scale	Thimble and sleeve satin chrome finish ø21 mm
Delivered	Including box, setting standards, adjustable stop

Application with adjustable stop on workpiece

Series 105 - 1000 mm to 2000 mm Range

This Outside Micrometer comes with Extension Anvil Collars.
It offers you the following benefits:

- The collars have a stable and rugged yet lightweight tube construction, and are ideal for large micrometers.
- The 50mm spindle stroke gives you extended range compared to standard spindle types.
- Anvil collars extend the measuring range even further.
- The setting standards supplied cover the whole measuring range.

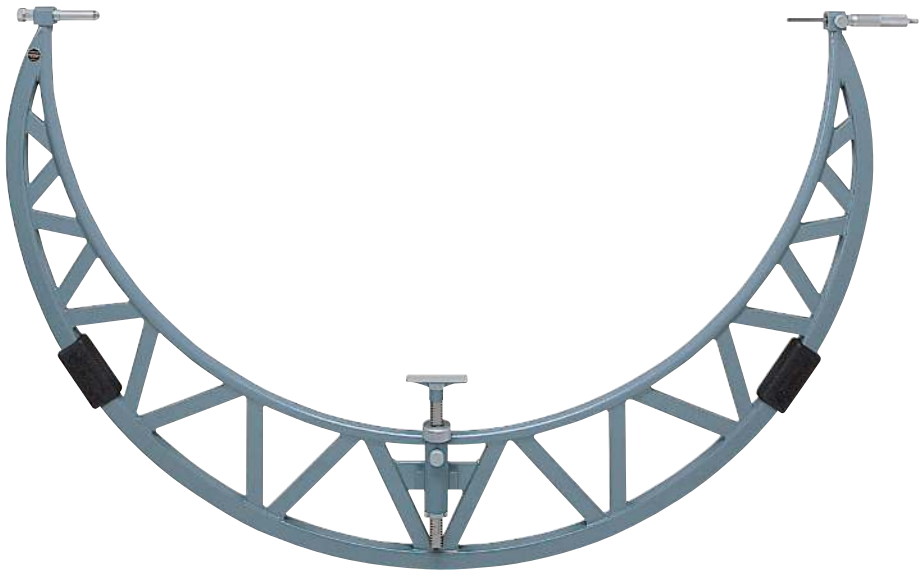

105-408

Metric

Extension Collar: 50 mm

No.	Range [mm]	Graduation	Spindle feed error	Flatness	Parallelism	Measuring force [N]	Extension collar	Mass [kg]	L [mm]	a [mm]
105-408	1000 - 1100	0,01 mm	6 µm	1,3 µm	13 µm	5-10	50 mm	10.49	1225	600
105-409	1100 - 1200	0,01 mm	6 µm	1,3 µm	14 µm	5-10	50 mm	11.28	1225	600
105-410	1200 - 1300	0,01 mm	6 µm	1,3 µm	15 µm	5-10	50 mm	12.05	1425	700
105-411	1300 - 1400	0,01 mm	6 µm	1,3 µm	16 µm	5-10	50 mm	12.72	1425	700
105-412	1400 - 1500	0,01 mm	6 µm	1,3 µm	17 µm	5-10	50 mm	13.4	1625	800
105-413	1500 - 1600	0,01 mm	6 µm	1,3 µm	18 µm	5-10	50 mm	14.33	1625	800
105-414	1600 - 1700	0,01 mm	6 µm	1,3 µm	19 µm	5-10	50 mm	15.26	1825	900
105-415	1700 - 1800	0,01 mm	6 µm	1,3 µm	20 µm	5-10	50 mm	16.44	1825	900
105-416	1800 - 1900	0,01 mm	6 µm	1,3 µm	21 µm	5-10	50 mm	18.1	2025	1000
105-417	1900 - 2000	0,01 mm	6 µm	1,3 µm	22 µm	5-10	50 mm	19.76	2025	1000

Metric

Extension Collar: 50 mm, 100 mm

No.	Range [mm]	Graduation	Spindle feed error	Flatness	Parallelism	Measuring force [N]	Extension collar	Mass [kg]	L [mm]	a [mm]
105-418	1000 - 1200	0,01 mm	6 µm	1,3 µm	14 µm	5-10	50, 100 mm	13.77	1225	600
105-419	1200 - 1400	0,01 mm	6 µm	1,3 µm	16 µm	5-10	50, 100 mm	15.77	1425	700
105-420	1400 - 1600	0,01 mm	6 µm	1,3 µm	18 µm	5-10	50, 100 mm	17.91	1625	800
105-421	1600 - 1800	0,01 mm	6 µm	1,3 µm	20 µm	5-10	50, 100 mm	20.8	1825	900
105-422	1800 - 2000	0,01 mm	6 µm	1,3 µm	22 µm	5-10	50, 100 mm	22.76	2025	1000

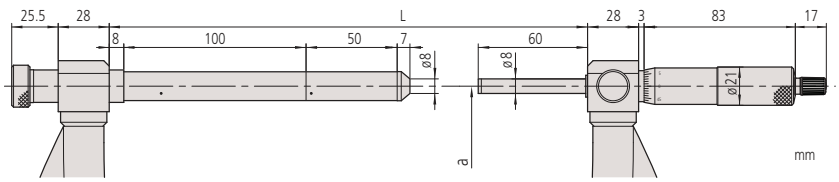

All products to be sold to commercial customers.
Product illustrations are without obligation. Product descriptions, in particular any and all technical specifications, are only binding when explicitly agreed upon.

Mitutoyo

Digimatic Sheet Metal Micrometers

Series 389

This Digimatic Sheet Metal Micrometer is designed with a deep frame, for measuring the thickness of sheet material.

Dust- and Jet Waterproof IP65
TÜVRheinland CERTIFIED
www.tuv.com ID 4011207400

IP65 except 389-514

389-251-30

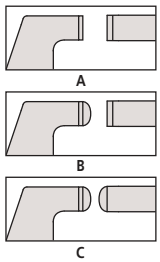

Functions	Series 389
ORIGIN	●
ABS / INC (INC ZERO)	●
Auto Power OFF after 20 min. non use	●
Low voltage alarm	●
Function lock	●
HOLD	●
2 x PRESET	●

Specifications

Display	LCD, character height 7,5 mm
Measuring face	Carbide-tipped, micro-lap finish
Measuring spindle	With spindle lock, ø 6,35 mm/ø 8 mm (389-514), spindle pitch 0,5 mm
Scale	Thimble and sleeve satin chrome finish
Power supply	Battery SR-44
Battery life	Approx. 2,4 years, approx. 1,8 years (389-514)
Delivered	Including box, key, 1 battery, 2 batteries (389-514)

Metric

No.	Range [mm]	Digital step	Maximum Permissible Error J MPE	Flatness	Parallelism	Anvil / Spindle	Measuring force [N]	Mass [g]
389-251-30	0 - 25	0,001 mm	±4 µm	0,6 µm	3 µm	Type A, flat/flat	3-8	840
389-261-30	0 - 25	0,001 mm	±4 µm	0,6 µm	3 µm	Type B, spherical/flat	3-8	840
389-271-30	0 - 25	0,001 mm	±4 µm	0,6 µm	3 µm	Type C, spherical/spherical	3-8	840
389-514	0 - 25	0,001 mm	±5 µm	1 µm	3 µm	Type A, flat/flat	10-14	2750
389-252-30	25 - 50	0,001 mm	±4 µm	0,6 µm	3 µm	Type A, flat/flat	3-8	920
389-262-30	25 - 50	0,001 mm	±4 µm	0,6 µm	3 µm	Type B, spherical/flat	3-8	920
389-272-30	25 - 50	0,001 mm	±4 µm	0,6 µm	3 µm	Type C, spherical/spherical	3-8	920

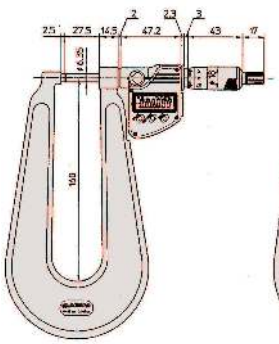

0-25 mm

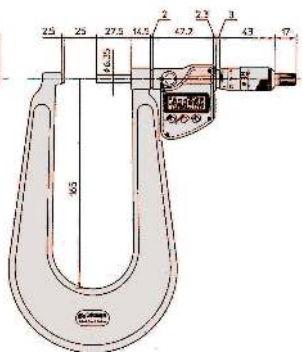

25-50 mm

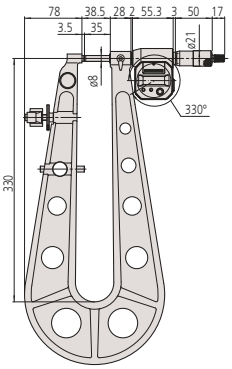

389-514

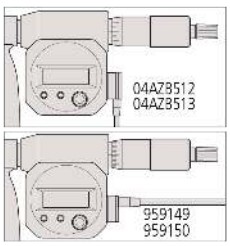

Digimatic cable for 389-514

Optional accessories

No.	Description
05CZA662	Digimatic Cable with Data Button IP Type, 1m, Micrometer Type
05CZA663	Digimatic Cable with Data Button IP Type, 2m, Micrometer Type
06AFM380B	USB Input Tool Direct (Digimatic USB), Digi/Digi2, With Data Button IP Micrometer Type
264-622	U-WAVE fit, IP67 Type, Wireless Transmitter for Micrometer
264-623	U-WAVE fit, Buzzer Type, Wireless Transmitter for Micrometer
264-626	U-WAVE fit Bluetooth, IP67 Type, Wireless Transmitter for Micrometer
264-627	U-WAVE fit Bluetooth, Buzzer Type, Wireless Transmitter for Micrometer
02AZF310	Connection Unit, U-WAVE fit, Waterproof Type
959150	Digimatic Cable, Straight, Data Button,, 2m
959149	Digimatic Cable, Straight, Data Button,, 1m
04AZB512	Digimatic Cable with Data Button, 1m, Flat L-Shape Left Type
04AZB513	Digimatic Cable, Straight, Data Button,, 2m, Flat L-Shape Left Type
06AFM380C	USB Input Tool Direct (Digimatic USB), Digi/Digi2, Straight, with Data Button
02AZD880G	U-WAVE-T, Buzzer Type, Wireless Transmitter
02AZD730G	U-WAVE-T, IP67 Type, Wireless Transmitter
02AZD790C	U-WAVE-T Connection Cable C, Straight, with Data Button

959149, 959150, 04AZB512, 04AZB513
06AFM380C,
02AZD880G, 02AZD730G, 02AZD790C
for 389-514

Consumable spares

No.	Description
938882	Battery SR44 1.5V

All products to be sold to commercial customers.
Product illustrations are without obligation. Product descriptions, in particular any and all technical specifications, are only binding when explicitly agreed upon.

Sheet Metal Micrometers

Series 118

This Sheet Metal Micrometer is designed with a deep frame for measuring the thickness of sheet material.

118-102

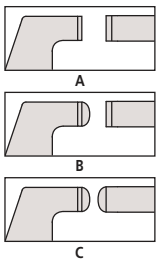

Specifications

Measuring face	Carbide-tipped, micro-lap finish
Measuring spindle	With spindle lock, throat depth up to 150 mm : ø 6.35 mm throat depth up to 300 mm : ø 8 mm, spindle pitch 0.5 mm
Scale	Thimble and sleeve satin chrome finish ø18 mm (118-103 ø21 mm)
Delivered	Including box, key, setting standard (from 25 mm upward)

Type A
Flat-Flat

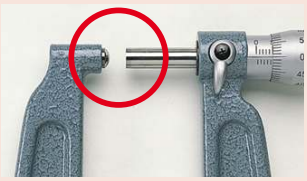

Type B
Spherical-Flat

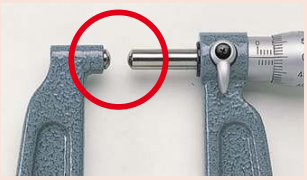

Type C
Spherical-Spherical

Metric

No.	Range [mm]	Graduation	Maximum Permissible Error J MPE	Flatness	Parallelism	Anvil / Spindle	Measuring force [N]
118-101	0 - 25	0,01 mm	±4 µm	0,6 µm	3 µm	Type A, flat/flat	3-8
118-102	0 - 25	0,01 mm	±4 µm	0,6 µm	3 µm	Type A, flat/flat	3-8
118-103	0 - 25	0,01 mm	±5 µm	1 µm	3 µm	Type A, flat/flat	10-14
118-110	25 - 50	0,01 mm	±4 µm	0,6 µm	3 µm	Type A, flat/flat	3-8
118-114	0 - 25	0,01 mm	±4 µm	0,6 µm	3 µm	Type B, spherical/flat	3-8
118-118	0 - 25	0,01 mm	±4 µm	0,6 µm	3 µm	Type C, spherical/spherical	3-8
118-126	25 - 50	0,01 mm	±4 µm	0,6 µm	3 µm	Type C, spherical/spherical	3-8

No.	Mass [g]	L [mm]	a [mm]	b [mm]	c [mm]	d [mm]	e [mm]	f [mm]	g [mm]
118-101	445	30,3	110	27,5	2,5	18	6,35	14,5	34
118-102	740	30,3	160	27,5	2,5	18	6,35	14,5	43
118-103	2650	38,5	330	35	3,5	21	8	28	84
118-110	820	55,3	165	27,5	2,5	18	6,35	14,5	41
118-114	740	30,3	160	27,5	2,5	18	6,35	14,5	43
118-118	740	30,3	160	27,5	2,5	18	6,35	14,5	43
118-126	820	55,3	165	27,5	2,5	18	6,35	14,5	41

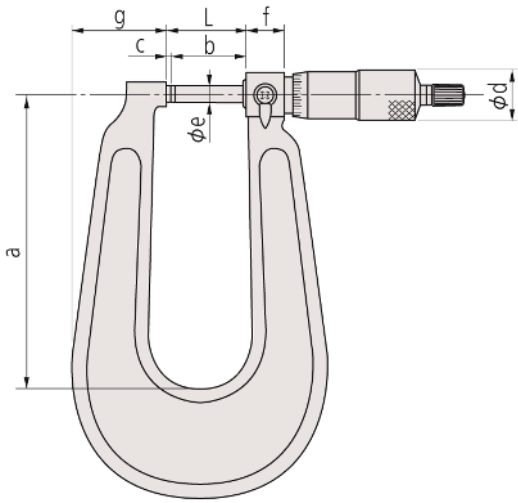

All products to be sold to commercial customers.
Product illustrations are without obligation. Product descriptions, in particular any and all technical specifications, are only binding when explicitly agreed upon.

Mitutoyo

Sheet Metal Micrometers Graduated Dial

Series 119

This Sheet Metal Micrometer comes with a graduated dial.
It offers you the following features:

- A deep frame that enables you to measure the thickness of sheet material.
- Easy-to-read graduated dial.

119-202

Metric

No.	Range [mm]	Graduation	Maximum Permissible Error J MPE	Mass [g]
119-202	0 - 25	0,01 mm	±4 µm	305

mm

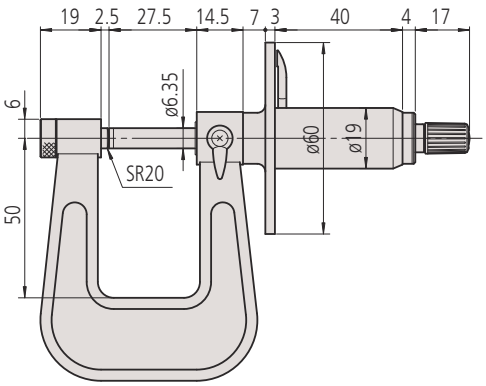

Specifications

Measuring face	Convex anvil and flat spindle, carbide-tipped
Measuring spindle	With spindle lock, ø 6,35 mm
Delivered	Including box

The Series 119 is provided with a dial for making easy and quick reading.

All products to be sold to commercial customers.
Product illustrations are without obligation. Product descriptions, in particular any and all technical specifications, are only binding when explicitly agreed upon.

Digimatic Caliper Jaw Micrometers

Series 343

This Digimatic Caliper Jaw Micrometer has been specially designed for measuring in hard-to-reach places.

Functions	Series 343
ORIGIN	●
ABS / INC (INC ZERO)	●
Auto Power OFF after 20 min. non use	●
Low voltage alarm	●
Function lock	●
HOLD	●

Specifications

Display	LCD, character height 7,5 mm
Measuring face	Carbide-tipped, micro-lap finish
Measuring spindle	With spindle lock, ø 6,35 mm, spindle pitch 0,5 mm
Scale	Thimble and sleeve satin chrome finish
Power supply	1 battery SR-44
Battery life	Approx. 2,4 years
Delivered	Including box, key, 1 battery, setting standard (from 25 mm upward)

Optional accessories

No.	Description
05CZA662	Digimatic Cable with Data Button IP Type, 1m, Micrometer Type
05CZA663	Digimatic Cable with Data Button IP Type, 2m, Micrometer Type
06AFM380B	USB Input Tool Direct (Digimatic USB), Digi/Digi2, With Data Button IP Micrometer Type
264-622	U-WAVE fit, IP67 Type, Wireless Transmitter for Micrometer
264-623	U-WAVE fit, Buzzer Type, Wireless Transmitter for Micrometer
264-626	U-WAVE fit Bluetooth, IP67 Type, Wireless Transmitter for Micrometer
264-627	U-WAVE fit Bluetooth, Buzzer Type, Wireless Transmitter for Micrometer
02AZF310	Connection Unit, U-WAVE fit, Waterproof Type

Consumable spares

No.	Description
938882	Battery SR44 1.5V

343-250-30

Metric

No.	Range [mm]	Digital step	Maximum Permissible Error J MPE	Flatness	Parallelism	Measuring force [N]	Mass [g]
343-250-30	0 - 25	0,001 mm	±5 µm	0,3 µm	3 µm	1-6	320
343-251-30	25 - 50	0,001 mm	±6 µm	0,3 µm	3 µm	1-6	340
343-252-30	50 - 75	0,001 mm	±7 µm	0,3 µm	4 µm	1-6	390
343-253-30	75 - 100	0,001 mm	±8 µm	0,3 µm	4 µm	1-6	440

No.	L [mm]	a [mm]	b [mm]	c [mm]
343-250-30	0	16	10,6	32,9
343-251-30	25	16	10,6	32,9
343-252-30	50	16	10,6	32,9
343-253-30	75	16	10,6	32,9

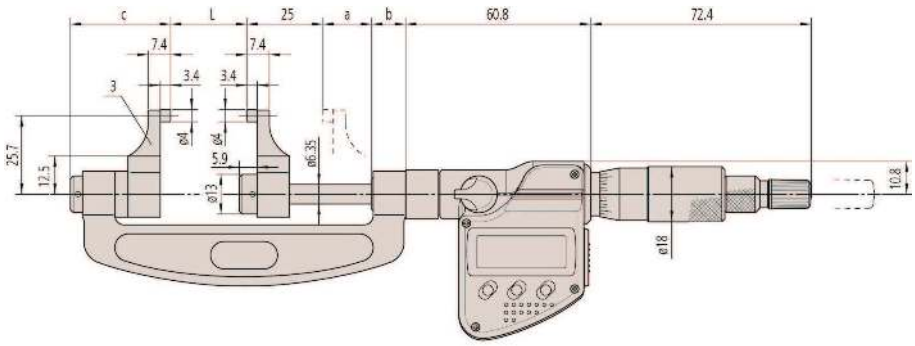

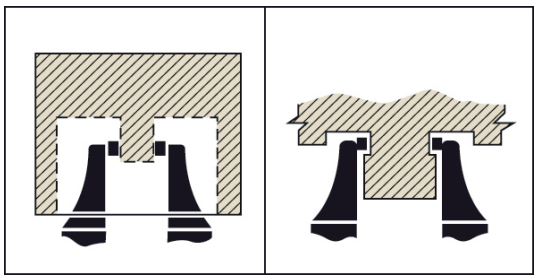

All products to be sold to commercial customers.
Product illustrations are without obligation. Product descriptions, in particular any and all technical specifications, are only binding when explicitly agreed upon.

Mitutoyo

Caliper Jaw Micrometers

Series 143

This Caliper Jaw Micrometer has been specially designed for measuring in hard-to-reach places.

143-101

Metric

No.	Range [mm]	Graduation	Maximum Permissible Error J MPE	Flatness	Parallelism	Measuring force [N]	Mass [g]
143-101	0 - 25	0,01 mm	±5 µm	0,3 µm	3 µm	1-6	210
143-102	25 - 50	0,01 mm	±6 µm	0,3 µm	3 µm	1-6	230
143-103	50 - 75	0,01 mm	±7 µm	0,3 µm	4 µm	1-6	280
143-104	75 - 100	0,01 mm	±8 µm	0,3 µm	4 µm	1-6	330
143-105	100 - 125	0,01 mm	±9 µm	0,3 µm	4 µm	1-6	400
143-106	125 - 150	0,01 mm	±9 µm	0,3 µm	5 µm	1-6	450
143-107	150 - 175	0,01 mm	±10 µm	0,3 µm	5 µm	1-6	520
143-108	175 - 200	0,01 mm	±10 µm	0,3 µm	5 µm	1-6	600
143-109	200 - 225	0,01 mm	±11 µm	0,3 µm	6 µm	1-6	690
143-110	225 - 250	0,01 mm	±11 µm	0,3 µm	6 µm	1-6	790
143-111	250 - 275	0,01 mm	±12 µm	0,3 µm	6 µm	1-6	900
143-112	275 - 300	0,01 mm	±12 µm	0,3 µm	7 µm	1-6	920

No.	L [mm]	a [mm]	b [mm]	c [mm]
143-101	59,8	31,8	10,6	28,6
143-102	84,8	31,8	10,6	28,6
143-103	109,8	31,8	10,6	28,6
143-104	134,8	31,8	10,6	28,6
143-105	159,8	31,8	10,6	28,6
143-106	184,8	31,8	10,6	28,6
143-107	209,8	31,8	10,6	28,6
143-108	234,8	31,8	10,6	28,6
143-109	255,8	27,8	14,5	32,5
143-110	280,8	27,8	14,5	32,5
143-111	305,8	27,8	14,5	32,5
143-112	330,8	27,8	14,5	32,5

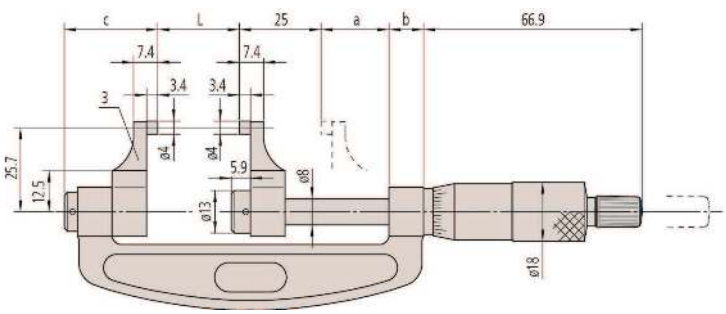

Specifications

Measuring face	Carbide-tipped, micro-lap finish
Measuring spindle	ø6,35 mm, spindle pitch 0,5 mm
Scale	Thimble and sleeve satin chrome finish ø18 mm
Delivered	Including box, key, setting standard (from 25 mm upward)

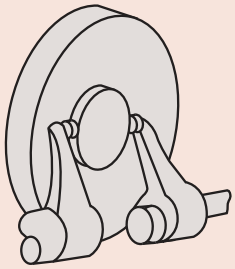

All products to be sold to commercial customers.
Product illustrations are without obligation. Product descriptions, in particular any and all technical specifications, are only binding when explicitly agreed upon.

Digimatic Screw Thread Micrometers with Interchangeable Tips

Functions	Series 326
ABS / INC (INC ZERO)	●
Auto Power OFF after 20 min. non use	●
Low voltage alarm	●
Function lock	●
HOLD	●
2 x PRESET	●

Specifications

Display	LCD, character height 7,5 mm
Measuring face	Interchangeable anvil/ spindle inserts (optional)
Measuring spindle	With spindle lock, ø 6,35 mm, spindle pitch 0,5 mm
Scale	Thimble and sleeve satin chrome finish
Power supply	1 battery SR-44
Battery life	Approx. 2,4 years
Delivered	Including box, key, 1 battery, setting standard (from 25 mm upward) interchangeable tips are optional

Standard accessories

No.	Description
167-261	Setting Standard Screw Thread Micrometer, 60°, Length: 25mm
167-262	Setting Standard Screw Thread Micrometer, 60°, Length: 50mm
167-263	Setting Standard Screw Thread Micrometer, 60°, Length: 75mm

Series 326

Dust- and Waterproof IP65

www.tuv.com ID 4011207400

This Digimatic Screw Thread Micrometer should be used with optional, interchangeable, anvils/spindle-tips that allow you to measure a wide range of metric/unified and Whitworth screw-thread pitch diameters.

A metric (unified) 60° setting standard is included with all models except those measuring range from 0-25 mm.

326-251-30 with optional accessories

Interchangeable anvils/spindle tips in matching pairs

Metric

No.	Range [mm]	Digital step	Spindle feed error	Measuring force [N]	Mass [g]	A [mm]	B [mm]
326-251-30	0 - 25	0,001 mm	3 µm	5-10	350	39,5	25
326-252-30	25 - 50	0,001 mm	3 µm	5-10	380	64,5	32
326-253-30	50 - 75	0,001 mm	3 µm	5-10	470	90	45
326-254-30	75 - 100	0,001 mm	3 µm	5-10	510	115,6	65

All products to be sold to commercial customers.
Product illustrations are without obligation. Product descriptions, in particular any and all technical specifications, are only binding when explicitly agreed upon.

Digimatic Screw Thread Micrometers with Interchangeable Tips

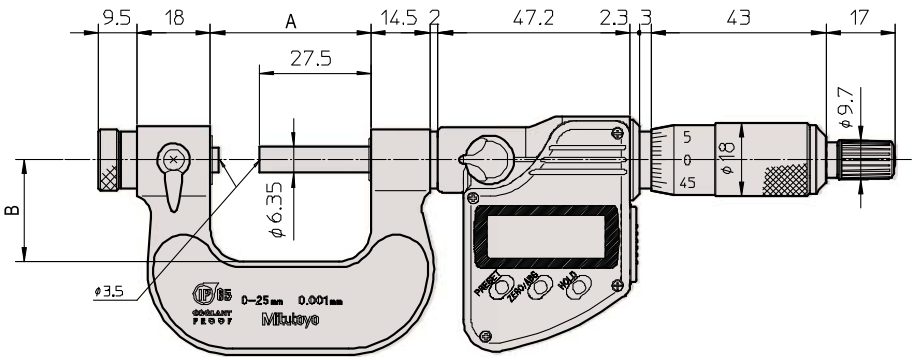

0-75 mm

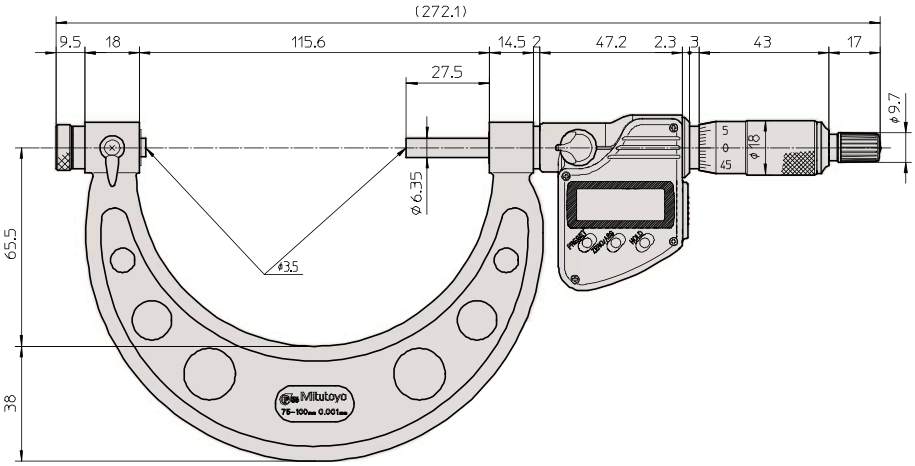

75-100 mm

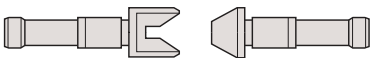

Anvil/spindle-tip matching pair

Optional accessories

No.	Description
05CZA662	Digimatic Cable with Data Button IP Type, 1m, Micrometer Type
05CZA663	Digimatic Cable with Data Button IP Type, 2m, Micrometer Type
06AFM380B	USB Input Tool Direct (Digimatic USB), Digi/Digi2, With Data Button IP Micrometer Type
264-622	U-WAVE fit, IP67 Type, Wireless Transmitter for Micrometer
264-623	U-WAVE fit, Buzzer Type, Wireless Transmitter for Micrometer
264-626	U-WAVE fit Bluetooth, IP67 Type, Wireless Transmitter for Micrometer
264-627	U-WAVE fit Bluetooth, Buzzer Type, Wireless Transmitter for Micrometer
02AZF310	Connection Unit, U-WAVE fit, Waterproof Type
167-272	Setting Standard Screw Thread Micrometer, 55°, Length: 25mm
167-273	Setting Standard Screw Thread Micrometer, 55°, Length: 50mm
167-274	Setting Standard Screw Thread Micrometer, 55°, Length: 75mm
167-275	Setting Standard Screw Thread Micrometer, 55°, Length: 100mm
126-800	Interchangeable Tip Set (Metric/UNF), 6 pairs
126-810	Interchangeable Tip Set (Whitworth), 10 pairs
126-801	Interchangeable Tips, 0,4-0,5mm/ 64-48TPI
126-802	Interchangeable Tips, 0,6-0,9mm/ 44-28TPI
126-803	Interchangeable Tips, 1-1,75mm/ 24-14TPI
126-804	Interchangeable Tips, 2-3mm/13-9TPI
126-805	Interchangeable Tips, 3,5-5mm/8-5TPI
126-806	Interchangeable Tips, 5,5-7mm/ 4,5-3,5TPI
126-811	Interchangeable Tips, 60-48 TPI
126-812	Interchangeable Tips, 48-40 TPI
126-813	Interchangeable Tips, 40-32 TPI
126-814	Interchangeable Tips, 32-24 TPI
126-815	Interchangeable Tips, 24-18 TPI
126-816	Interchangeable Tips, 18-14 TPI
126-817	Interchangeable Tips, 14-10 TPI
126-818	Interchangeable Tips, 10-7 TPI
126-819	Interchangeable Tips, 7-4,5 TPI
126-820	Interchangeable Tips, 7-5-3,5 TPI

Consumable spares

No.	Description
938882	Battery SR44 1.5V

All products to be sold to commercial customers.
Product illustrations are without obligation. Product descriptions, in particular any and all technical specifications, are only binding when explicitly agreed upon.

Screw Thread Micrometers with Interchangeable Tips

Series 126

This Screw Thread Micrometer should be used with optional, interchangeable, anvils/spindle-tips that allow you to measure a wide range of metric/unified and Whitworth screw-thread pitch diameters.

A metric (unified) 60° setting standard is included with all models except those measuring range from 0-25 mm.

126-125 with optional accessories

Interchangeable anvils/spindle tips in matching pairs

Specifications

Measuring face	Interchangeable anvil/ spindle inserts (optional)
Measuring spindle	With spindle lock, ø 6,35 mm, spindle pitch 0,5 mm
Scale	Thimble and sleeve satin chrome finish ø18 mm
Delivered	Including box, setting standard (60.0°) (from 25 mm upward), key Interchangeable anvils/ spindle tips not included

Standard accessories

No.	Description
167-261	Setting Standard Screw Thread Micrometer, 60°, Length: 25mm
167-262	Setting Standard Screw Thread Micrometer, 60°, Length: 50mm
167-263	Setting Standard Screw Thread Micrometer, 60°, Length: 75mm
167-264	Setting Standard Screw Thread Micrometer, 60°, Length: 100mm
167-265	Setting Standard Screw Thread Micrometer, 60°, Length: 125mm
167-266	Setting Standard Screw Thread Micrometer, 60°, Length: 150mm
167-267	Setting Standard Screw Thread Micrometer, 60°, Length: 175mm
167-268	Setting Standard Screw Thread Micrometer, 60°, Length: 200mm
167-269	Setting Standard Screw Thread Micrometer, 60°, Length: 225mm
167-270	Setting Standard Screw Thread Micrometer, 60°, Length: 250mm
167-271	Setting Standard Screw Thread Micrometer, 60°, Length: 275mm

Metric

No.	Range [mm]	Graduation	Spindle feed error	Measuring force [N]	Mass [g]	L [mm]	a [mm]
126-125	0 - 25	0,01 mm	3 µm	5-10	240	39,5	25
126-126	25 - 50	0,01 mm	3 µm	5-10	290	64,5	32
126-127	50 - 75	0,01 mm	3 µm	5-10	390	90	45
126-128	75 - 100	0,01 mm	3 µm	5-10	450	115,6	65
126-129	100 - 125	0,01 mm	3 µm	5-10	530	140,6	79
126-130	125 - 150	0,01 mm	3 µm	5-10	620	165,6	93
126-131	150 - 175	0,01 mm	3 µm	5-10	730	190,5	105
126-132	175 - 200	0,01 mm	3 µm	5-10	860	214,5	118
126-133	200 - 225	0,01 mm	3 µm	5-10	1030	240,5	131
126-134	225 - 250	0,01 mm	3 µm	5-10	1200	265,5	144
126-135	250 - 275	0,01 mm	3 µm	5-10	1370	290,5	156
126-136	275 - 300	0,01 mm	3 µm	5-10	1540	314,5	169

All products to be sold to commercial customers.
Product illustrations are without obligation. Product descriptions, in particular any and all technical specifications, are only binding when explicitly agreed upon.

Screw Thread Micrometers with Interchangeable Tips

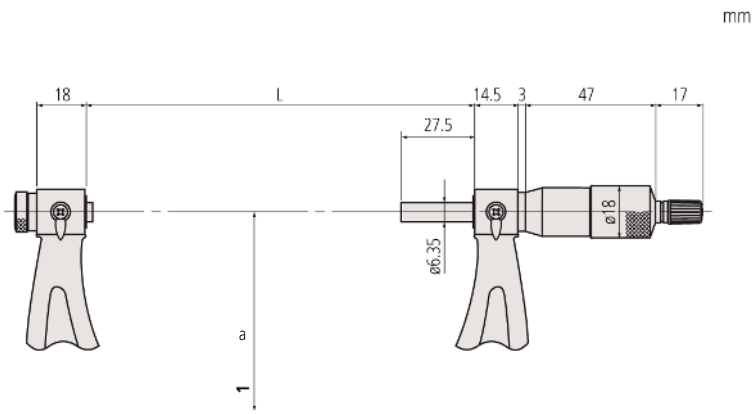

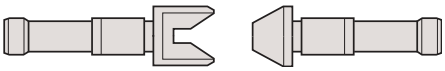

Anvil/spindle-tip matching pair

Optional accessories

No.	Description
167-272	Setting Standard Screw Thread Micrometer, 55°, Length: 25mm
167-273	Setting Standard Screw Thread Micrometer, 55°, Length: 50mm
167-274	Setting Standard Screw Thread Micrometer, 55°, Length: 75mm
167-275	Setting Standard Screw Thread Micrometer, 55°, Length: 100mm
167-276	Setting Standard Screw Thread Micrometer, 55°, Length: 125mm
167-277	Setting Standard Screw Thread Micrometer, 55°, Length: 150mm
167-278	Setting Standard Screw Thread Micrometer, 55°, Length: 175mm
167-279	Setting Standard Screw Thread Micrometer, 55°, Length: 200mm
167-280	Setting Standard Screw Thread Micrometer, 55°, Length: 225mm
126-800	Interchangeable Tip Set (Metric/UNF), 6 pairs
126-810	Interchangeable Tip Set (Whitworth), 10 pairs
126-801	Interchangeable Tips, 0,4-0,5mm/ 64-48TPI
126-802	Interchangeable Tips, 0,6-0,9mm/ 44-28TPI
126-803	Interchangeable Tips, 1-1,75mm/ 24-14TPI
126-804	Interchangeable Tips, 2-3mm/13-9TPI
126-805	Interchangeable Tips, 3,5-5mm/8-5TPI
126-806	Interchangeable Tips, 5,5-7mm/ 4,5-3,5TPI
126-811	Interchangeable Tips, 60-48 TPI
126-812	Interchangeable Tips, 48-40 TPI
126-813	Interchangeable Tips, 40-32 TPI
126-814	Interchangeable Tips, 32-24 TPI
126-815	Interchangeable Tips, 24-18 TPI
126-816	Interchangeable Tips, 18-14 TPI
126-817	Interchangeable Tips, 14-10 TPI
126-818	Interchangeable Tips, 10-7 TPI
126-819	Interchangeable Tips, 7-4,5 TPI
126-820	Interchangeable Tips, 7-5-3,5 TPI

All products to be sold to commercial customers.
Product illustrations are without obligation. Product descriptions, in particular any and all technical specifications, are only binding when explicitly agreed upon.

Interchangeable Thread Measuring Anvil / Spindle Tip Sets

Series 126

Optional accessories anvils/spindle-tips

Individual measuring anvil/spindle-tip pairs

No.	Half Angle Error	Metric pitch	UNF threads/inch	Withworth threads / inch
126-801	±30'	0,4 - 0,5 mm	64 - 48 TPI	
126-802	±20'	0,6 - 0,9 mm	44 - 28 TPI	
126-803	±15'	1 - 1,75 mm	24 - 14 TPI	
126-804	±10'	2 - 3 mm	13 - 9 TPI	
126-805	±10'	3,5 - 5 mm	8 - 5 TPI	
126-806	±10'	5,5 - 7 mm	4,5 - 3,5 TPI	
126-811	±30'			60 - 48 TPI
126-812	±30'			48 - 40 TPI
126-813	±20'			40 - 32 TPI
126-814	±20'			32 - 24 TPI
126-815	±15'			24 - 18 TPI
126-816	±15'			18 - 14 TPI
126-817	±10'			14 - 10 TPI
126-818	±10'			10 - 7 TPI
126-819	±10'			7 - 4,5 TPI
126-820	±10'			4,5 - 3,5 TPI

Measuring anvil/spindle-tip set Metric UNF (consists of No. 126-801 to 126-806)

No.	Content of Set	Metric pitch	UNF threads/inch
126-800	No. 126-801 to 126-806	0,4 - 7 mm	64 - 3,5 TPI

Measuring anvil/spindle-tip set Whitworth (consists of No. 126-811 to 126-820)

No.	Content of Set	Withworth threads / inch
126-810	No. 126-811 to 126-820	60 - 3,5 TPI

Ø	Thread pitch	Pitch
Nominal		Ø
	P	d2
M 1	0,25	0,838
M 1,2	0,25	1,038
M 1,4	0,30	1,205
M 1,7	0,35	1,473
M 2	0,40	1,740
M 2,3	0,40	2,040
M 2,6	0,45	2,308
M 3	0,50	2,675
M 3,5	0,60	3,110
M 4	0,70	3,545
M 5	0,80	4,480
M 6	1,00	5,350
M 8	1,25	7,188
M 10	1,50	9,026
M 12	1,75	10,863

Ø	Thread pitch	Pitch
Nominal		Ø
	P	d2
M 14	2,00	12,701
M 16	2,00	14,701
M 20	2,50	18,376
M 22	2,50	20,376
M 24	3,00	22,051
M 27	3,00	25,051
M 30	3,50	27,727
M 33	3,50	30,727
M 36	4,00	33,402
M 39	4,00	36,402
M 42	4,50	39,077
M 45	4,50	42,077
M 48	5,00	44,752
M 52	5,00	48,752
M 56	5,50	52,428
M 60	5,50	56,428

All products to be sold to commercial customers.
Product illustrations are without obligation. Product descriptions, in particular any and all technical specifications, are only binding when explicitly agreed upon.

Mitutoyo

Screw Thread Micrometers

Series 125

This Screw Thread Micrometer has a fixed anvil, offering the following benefits:

- Fixed anvil type.
- It directly indicates screw pitch diameter, meaning no need for calculation.

125-103

Specifications

Measuring face	Hardened steel, fixed anvil/spindle
Measuring spindle	With spindle lock, ø 6,35 mm, spindle pitch 0,5 mm
Scale	Thimble and sleeve satin chrome finish ø18 mm
Delivered	Including box, setting standard 60° (from 25 mm upward), key

Metric

No.	Range [mm]	Graduation	Spindle feed error	Thread to be measured (Metric/Unified)	Mass [g]	L [mm]	a [mm]
125-101	0 - 25	0,01 mm	3 µm	0,4-0,5 mm / 64-48 TPI	200	37,2	25
125-102	0 - 25	0,01 mm	3 µm	0,6-0,9 mm / 44-28 TPI	200	37,2	25
125-103	0 - 25	0,01 mm	3 µm	1-1,75 mm / 24-14 TPI	200	37,2	25
125-104	0 - 25	0,01 mm	3 µm	2-3 mm / 13-9 TPI	200	37,2	25
125-105	0 - 25	0,01 mm	3 µm	3,5-5 mm / 8-5 TPI	200	37,2	25
125-106	25 - 50	0,01 mm	3 µm	0,4-0,5 mm / 64-48 TPI	250	62,2	32
125-107	25 - 50	0,01 mm	3 µm	0,6-0,9 mm / 44-28 TPI	250	62,2	32
125-108	25 - 50	0,01 mm	3 µm	1-1,75 mm / 24-14 TPI	250	62,2	32
125-109	25 - 50	0,01 mm	3 µm	2-3 mm / 13-9 TPI	250	62,2	32
125-110	25 - 50	0,01 mm	3 µm	3,5-5 mm / 8-5 TPI	250	62,2	32
125-111	50 - 75	0,01 mm	3 µm	0,6-0,9 mm / 44-28 TPI	260	87	49
125-112	50 - 75	0,01 mm	3 µm	1-1,75 mm / 24-14 TPI	260	87	49
125-113	50 - 75	0,01 mm	3 µm	2-3 mm / 13-9 TPI	260	87	49
125-114	50 - 75	0,01 mm	3 µm	3,5-5 mm / 8-5 TPI	260	87	49
125-115	50 - 75	0,01 mm	3 µm	5,5-7 mm / 4,5-3,5 TPI	260	87	49
125-116	75 - 100	0,01 mm	3 µm	0,6-0,9 mm / 44-28 TPI	330	112	63
125-117	75 - 100	0,01 mm	3 µm	1-1,75 mm / 24-14 TPI	330	112	63
125-118	75 - 100	0,01 mm	3 µm	2-3 mm / 13-9 TPI	330	112	63
125-119	75 - 100	0,01 mm	3 µm	3,5-5 mm / 8-5 TPI	330	112	63
125-120	75 - 100	0,01 mm	3 µm	5,5-7 mm / 4,5-3,5 TPI	330	112	63

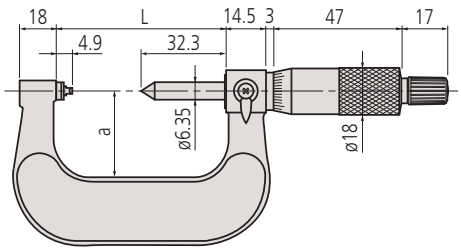

0-50 mm

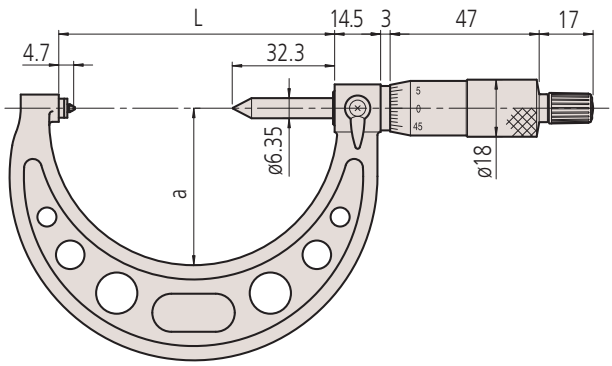

50-100 mm

All products to be sold to commercial customers.
Product illustrations are without obligation. Product descriptions, in particular any and all technical specifications, are only binding when explicitly agreed upon.

Digimatic Gear Tooth Micrometers

Functions	Series 324
ABS / INC (INC ZERO)	●
Auto Power OFF after 20 min. non use	●
Low voltage alarm	●
Function lock	●
HOLD	●
PRESET	●

Specifications

Display	LCD, character height 7,5 mm
Measuring face	Interchangeable anvil/ spindle inserts (optional)
Measuring spindle	With spindle lock, ø 6,35 mm, spindle pitch 0,5 mm
Scale	Thimble and sleeve satin chrome finish
Power supply	1 battery SR-44
Battery life	Approx. 2,4 years
Delivered	Including box, key, 1 battery, setting standard (from 25 mm upward) interchangeable tips are optional

Series 324

Dust- and Waterproof IP65

This Digimatic Gear Tooth Micrometer is designed to measure the over-pin diameter of gears .

- It has interchangeable steel or carbide ball inserts (optional accessory) that allow you to measure modules sized between 0,5-5,25 mm.

324-251-30

Metric

No.	Range [mm]	Digital step	Spindle feed error	Measuring force [N]	Mass [g]	L [mm]	a [mm]
324-251-30	0 - 25	0,001 mm	3 µm	5-10	400	64,5	32
324-252-30	25 - 50	0,001 mm	3 µm	5-10	490	90	45
324-253-30	50 - 75	0,001 mm	3 µm	5-10	530	115,6	65,5
324-254-30	75 - 100	0,001 mm	3 µm	5-10	600	140,6	79

All products to be sold to commercial customers.
Product illustrations are without obligation. Product descriptions, in particular any and all technical specifications, are only binding when explicitly agreed upon.

Digimatic Gear Tooth Micrometers

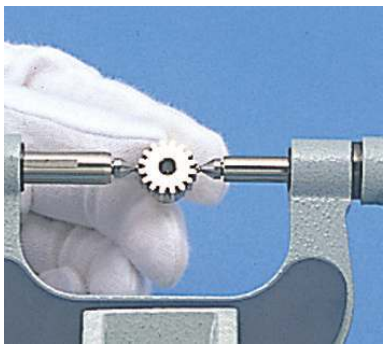

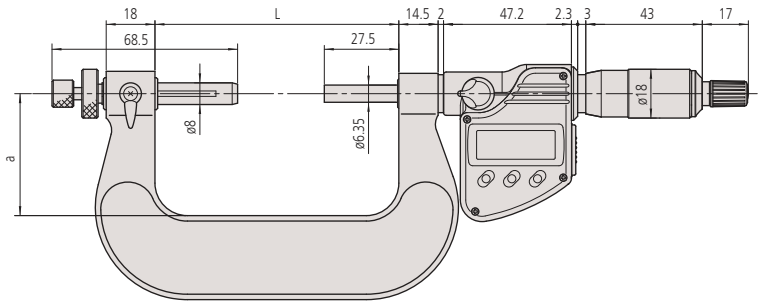

0-50 mm

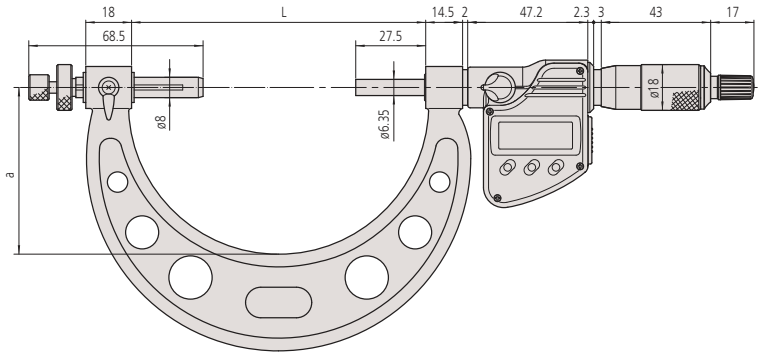

50-100 mm

Optional accessories

No.	Description
05CZA662	Digimatic Cable with Data Button IP Type, 1m, Micrometer Type
05CZA663	Digimatic Cable with Data Button IP Type, 2m, Micrometer Type
06AFM380B	USB Input Tool Direct (Digimatic USB), Digi/Digi2, With Data Button IP Micrometer Type
264-622	U-WAVE fit, IP67 Type, Wireless Transmitter for Micrometer
264-623	U-WAVE fit, Buzzer Type, Wireless Transmitter for Micrometer
264-626	U-WAVE fit Bluetooth, IP67 Type, Wireless Transmitter for Micrometer
264-627	U-WAVE fit Bluetooth, Buzzer Type, Wireless Transmitter for Micrometer
02AZF310	Connection Unit, U-WAVE fit, Waterproof Type
124-801	Interchangeable Ball Anvil/Spindle Tip, 0,8mm
124-802	Interchangeable Ball Anvil/Spindle Tip, 1,0mm
124-821	Interchangeable Ball Anvil/Spindle Tip, 1,5mm
124-805	Interchangeable Ball Anvil/Spindle Tip, 2,0mm
124-822	Interchangeable Ball Anvil/Spindle Tip, 2,5mm
124-807	Interchangeable Ball Anvil/Spindle Tip, 3,0mm
124-823	Interchangeable Ball Anvil/Spindle Tip, 3,5mm
124-810	Interchangeable Ball Anvil/Spindle Tip, 4,0mm
124-824	Interchangeable Ball Anvil/Spindle Tip, 4,5mm
124-812	Interchangeable Ball Anvil/Spindle Tip, 5,0mm
124-814	Interchangeable Ball Anvil/Spindle Tip, 6,0mm
124-816	Interchangeable Ball Anvil/Spindle Tip, 7,0mm
124-819	Interchangeable Ball Anvil/Spindle Tip, 8,0mm
124-803	Interchangeable Ball Anvil/Spindle Tip, 1,191mm (3/64")
124-804	Interchangeable Ball Anvil/Spindle Tip, 1,588mm (1/16")
124-806	Interchangeable Ball Anvil/Spindle Tip, 2,381mm (3/32")
124-808	Interchangeable Ball Anvil/Spindle Tip, 3,175mm (1/8")
124-809	Interchangeable Ball Anvil/Spindle Tip, 3,969mm (5/32")
124-811	Interchangeable Ball Anvil/Spindle Tip, 4,763mm (3/16")
124-813	Interchangeable Ball Anvil/Spindle Tip, 5,556mm (7/32")
124-815	Interchangeable Ball Anvil/Spindle Tip, 6,35mm (1/4")
124-817	Interchangeable Ball Anvil/Spindle Tip, 7,144mm (9/32")
124-818	Interchangeable Ball Anvil/Spindle Tip, 7,938mm (5/16")
124-820	Interchangeable Ball Anvil/Spindle Tip, 8,731mm (11/32")

Consumable spares

No.	Description
938882	Battery SR44 1.5V

All products to be sold to commercial customers.
Product illustrations are without obligation. Product descriptions, in particular any and all technical specifications, are only binding when explicitly agreed upon.

Gear Tooth Micrometers

Series 124

Measuring the over-pin diameter of gears .

- It has interchangeable steel or carbide ball inserts (optional accessory) that allow you to measure modules sized between 0,5-5,25 mm.

124-173 with optional accessories

Specifications

Measuring face	Interchangeable anvil/ spindle inserts (optional)
Measuring spindle	With spindle lock, ø 6,35 mm, spindle pitch 0,5 mm
Scale	Thimble and sleeve satin chrome finish ø18 mm
Delivered	Including box, setting standard (from 25 mm upward), key, interchangeable anvils/spindle tips not included

Optional accessories

No.	Description
124-801	Interchangeable Ball Anvil/Spindle Tip, 0,8mm
124-802	Interchangeable Ball Anvil/Spindle Tip, 1,0mm
124-803	Interchangeable Ball Anvil/Spindle Tip, 1,191mm (3/64")
124-821	Interchangeable Ball Anvil/Spindle Tip, 1,5mm
124-804	Interchangeable Ball Anvil/Spindle Tip, 1,588mm (1/16")
124-805	Interchangeable Ball Anvil/Spindle Tip, 2,0mm
124-806	Interchangeable Ball Anvil/Spindle Tip, 2,381mm (3/32")
124-822	Interchangeable Ball Anvil/Spindle Tip, 2,5mm
124-807	Interchangeable Ball Anvil/Spindle Tip, 3,0mm
124-808	Interchangeable Ball Anvil/Spindle Tip, 3,175mm (1/8")
124-823	Interchangeable Ball Anvil/Spindle Tip, 3,5mm
124-809	Interchangeable Ball Anvil/Spindle Tip, 3,969mm (5/32")
124-810	Interchangeable Ball Anvil/Spindle Tip, 4,0mm
124-824	Interchangeable Ball Anvil/Spindle Tip, 4,5mm
124-811	Interchangeable Ball Anvil/Spindle Tip, 4,763mm (3/16")
124-812	Interchangeable Ball Anvil/Spindle Tip, 5,0mm
124-813	Interchangeable Ball Anvil/Spindle Tip, 5,556mm (7/32")
124-814	Interchangeable Ball Anvil/Spindle Tip, 6,0mm
124-815	Interchangeable Ball Anvil/Spindle Tip, 6,35mm (1/4")
124-816	Interchangeable Ball Anvil/Spindle Tip, 7,0mm
124-817	Interchangeable Ball Anvil/Spindle Tip, 7,144mm (9/32")
124-818	Interchangeable Ball Anvil/Spindle Tip, 7,938mm (5/16")
124-819	Interchangeable Ball Anvil/Spindle Tip, 8,0mm
124-820	Interchangeable Ball Anvil/Spindle Tip, 8,731mm (11/32")

Metric

No.	Range [mm]	Graduation	Spindle feed error	Measuring force [N]	Mass [g]	L [mm]	a [mm]
124-173	0 - 25	0,01 mm	3 µm	5-10	295	64,5	32
124-174	25 - 50	0,01 mm	3 µm	5-10	400	90	45
124-175	50 - 75	0,01 mm	3 µm	5-10	460	115,6	65
124-176	75 - 100	0,01 mm	3 µm	5-10	540	140,6	79
124-177	100 - 125	0,01 mm	3 µm	5-10	640	165,6	93
124-178	125 - 150	0,01 mm	3 µm	5-10	760	190,5	105
124-179	150 - 175	0,01 mm	3 µm	5-10	900	214,5	120
124-180	175 - 200	0,01 mm	3 µm	5-10	1060	240,5	131
124-181	200 - 225	0,01 mm	3 µm	5-10	1230	265,5	144
124-182	225 - 250	0,01 mm	3 µm	5-10	1430	290,5	156
124-183	250 - 275	0,01 mm	3 µm	5-10	1620	314,5	171
124-195	275 - 300	0,01 mm	3 µm	5-10	2070	353	187

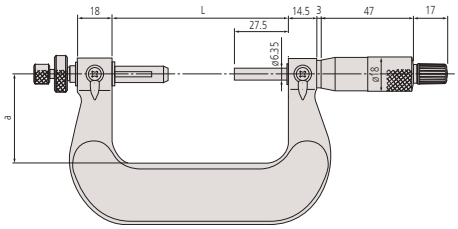

0-50 mm

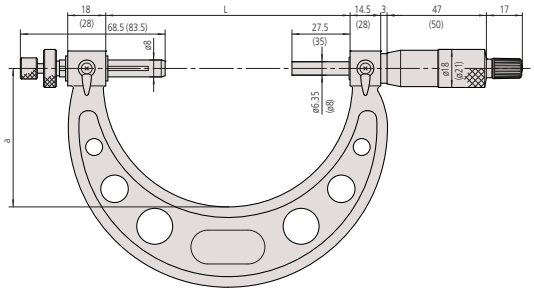

50-300 mm

All products to be sold to commercial customers.
Product illustrations are without obligation. Product descriptions, in particular any and all technical specifications, are only binding when explicitly agreed upon.

Mitutoyo

Interchangeable Ball Anvil/Spindle Tip Sets

Series 124/ 324

These optional interchangeable anvils allow you to measure the over-pin diameter of gears.

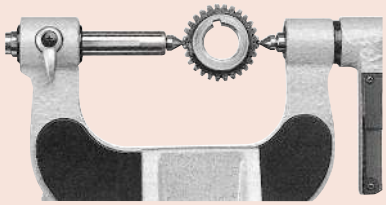

Metric

No.	Diameter (D)	Measurable module	Diameter over balls	Remarks
124-801	0,8 mm	0,5 - 0,55	50	Carbide-tipped type
124-802	1 mm	0,6 - 0,65	45	Carbide-tipped type
124-821	1,5 mm	0,9 - 1	28 - 26	Carbide-tipped type
124-805	2 mm	1,25	22	Carbide-tipped type
124-822	2,5 mm	1,5	17	Steel type
124-807	3 mm	1,75	15	Steel type
124-823	3,5 mm	2	13	Steel type
124-810	4 mm	2,25	11	Steel type
124-824	4,5 mm	2,5	10	Steel type
124-812	5 mm	2,75	9	Steel type
124-814	6 mm	3,5	7	Steel type
124-816	7 mm	4	6,5	Steel type
124-819	8 mm	4,75	5,5	Steel type

All products to be sold to commercial customers.
Product illustrations are without obligation. Product descriptions, in particular any and all technical specifications, are only binding when explicitly agreed upon.

Digimatic Disc Micrometers

Functions	Series 323
ORIGIN	●
ABS / INC (INC ZERO)	●
Auto Power OFF after 20 min. non use	●
Low voltage alarm	●
Function lock	●
HOLD	●

Specifications

Display	LCD, character height 7,5 mm
Measuring face	Hardened steel
Measuring spindle	With spindle lock, ø 6,35 mm, spindle pitch 0,5 mm
Scale	Thimble and sleeve satin chrome finish
Power supply	1 battery SR-44
Battery life	Approx. 2,4 years
Delivered	Including box, key, 1 battery, setting standard (from 25 mm upward)

Optional accessories

No.	Description
05CZA662	Digimatic Cable with Data Button IP Type, 1m, Micrometer Type
05CZA663	Digimatic Cable with Data Button IP Type, 2m, Micrometer Type
06AFM380B	USB Input Tool Direct (Digimatic USB), Digi/Digi2, With Data Button IP Micrometer Type
264-622	U-WAVE fit, IP67 Type, Wireless Transmitter for Micrometer
264-623	U-WAVE fit, Buzzer Type, Wireless Transmitter for Micrometer
264-626	U-WAVE fit Bluetooth, IP67 Type, Wireless Transmitter for Micrometer
264-627	U-WAVE fit Bluetooth, Buzzer Type, Wireless Transmitter for Micrometer
02AZF310	Connection Unit, U-WAVE fit, Waterproof Type

Consumable spares

No.	Description
938882	Battery SR44 1.5V

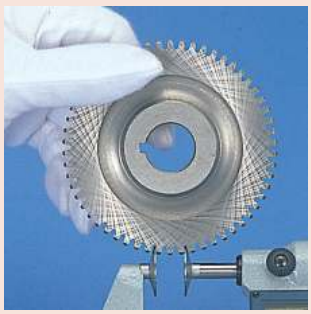

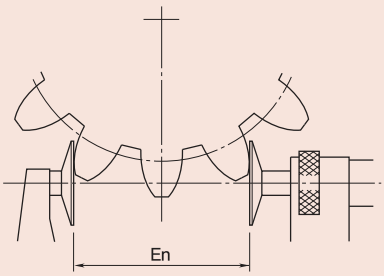

Root tangent length of gear (En)

Series 323

This Digimatic Disc Micrometer enables you to measure hard-to-reach features,
offering you the following benefits:

- Measuring the root tangent length of spur and helical gears.
- You can measure recessed features that are difficult to reach with a standard micrometer.

323-250-30

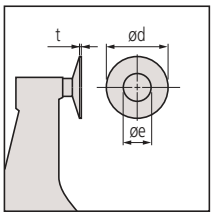

Metric

No.	Range [mm]	Digital step	Maximum Permissible Error J MPE	Flatness	Parallelism	Measuring force [N]
323-250-30	0 - 25	0,001 mm	±4 µm	1 µm	4 µm	3-8
323-251-30	25 - 50	0,001 mm	±4 µm	1 µm	4 µm	3-8
323-252-30	50 - 75	0,001 mm	±6 µm	1 µm	6 µm	3-8
323-253-30	75 - 100	0,001 mm	±6 µm	1 µm	6 µm	3-8

No.	Measurable module	Mass [g]	L [mm]	a [mm]	b [mm]	c [mm]	d [mm]	e [mm]	t [mm]
323-250-30	0,5 - 6	290	39,7	4,5	9,2	25	20	8	0,7
323-251-30	0,5 - 6	355	65,6	5,4	11	31	20	8	0,7
323-252-30	0,5 - 6	555	90,7	5,5	12,2	50	20	8	0,7
323-253-30	0,5 - 6	610	112,5	5,5	13,5	60	20	8	0,7

mm

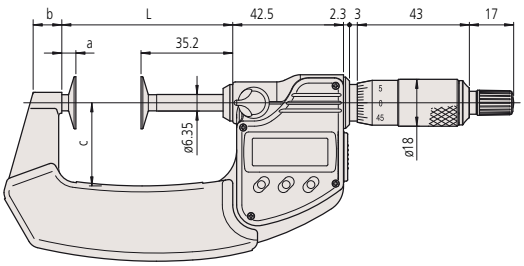

0-75 mm

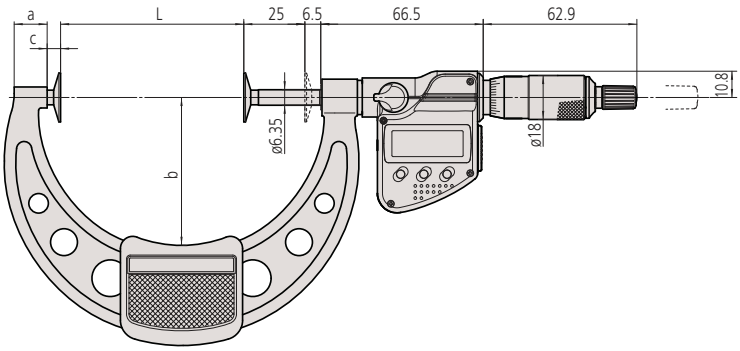

75-100 mm

All products to be sold to commercial customers.
Product illustrations are without obligation. Product descriptions, in particular any and all technical specifications, are only binding when explicitly agreed upon.

Disc Micrometers

Series 123

This Disc Micrometer enables you to measure hard-to-reach features, offering you the following benefits:

- Measuring the root tangent length of spur and helical gears.
- You can measure recessed features that are difficult to reach with a standard micrometer.

123-101

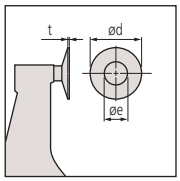

Specifications

Measuring face	Hardened steel or carbide-tipped
Measuring spindle	With spindle lock, ø 6,35 mm, spindle pitch 0,5 mm
Scale	Thimble and sleeve satin chrome finish ø18 mm
Delivered	Including box, key, setting standard (from 25 mm upward)

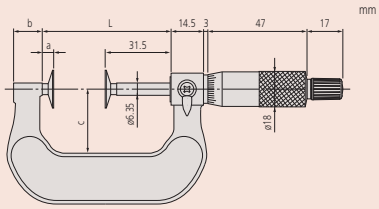

0-50 mm

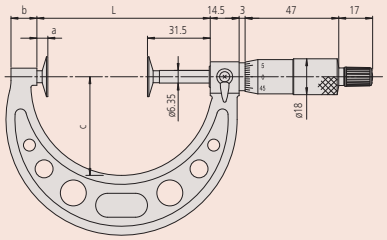

50-300 mm

Metric

No.	Range [mm]	Graduation	Maximum Permissible Error J MPE	Flatness	Parallelism	Measuring force [N]	Measurable module
123-101	0 - 25	0,01 mm	±4 µm	1 µm	4 µm	5-10	0,5 - 6
123-102	25 - 50	0,01 mm	±4 µm	1 µm	4 µm	5-10	0,5 - 6
123-103	50 - 75	0,01 mm	±6 µm	1 µm	6 µm	5-10	0,5 - 6
123-104	75 - 100	0,01 mm	±6 µm	1 µm	6 µm	5-10	0,5 - 6
123-105	100 - 125	0,01 mm	±7 µm	1,6 µm	7 µm	5-10	0,7 - 11
123-106	125 - 150	0,01 mm	±7 µm	1,6 µm	7 µm	5-10	0,7 - 11
123-107	150 - 175	0,01 mm	±8 µm	1,6 µm	8 µm	5-10	0,7 - 11
123-108	175 - 200	0,01 mm	±8 µm	1,6 µm	8 µm	5-10	0,7 - 11
123-109	200 - 225	0,01 mm	±8 µm	1,6 µm	8 µm	5-10	0,7 - 11
123-110	225 - 250	0,01 mm	±9 µm	1,6 µm	9 µm	5-10	0,7 - 11
123-111	250 - 275	0,01 mm	±9 µm	1,6 µm	9 µm	5-10	0,7 - 11
123-112	275 - 300	0,01 mm	±9 µm	1,6 µm	9 µm	5-10	0,7 - 11

No.	Mass [g]	L [mm]	a [mm]	b [mm]	c [mm]	d [mm]	e [mm]	t [mm]
123-101	200	37,5	6	14	25	20	8	0,7
123-102	250	62,5	6	14	32	20	8	0,7
123-103	300	87	5,5	11	49	20	8	0,7
123-104	375	112	5,5	11	63	20	8	0,7
123-105	520	137,5	6	12	79	30	12	1
123-106	570	162,5	6	15	94	30	12	1
123-107	730	187,5	6	16	106	30	12	1
123-108	890	212,5	6	15	118	30	12	1
123-109	1000	237,5	6	14	130	30	12	1
123-110	1200	262,5	6	14	143	30	12	1
123-111	1410	287,5	6	15	156	30	12	1
123-112	1680	312,5	6	15	169	30	12	1

Metric

With carbide-tipped discs

No.	Range [mm]	Graduation	Maximum Permissible Error J MPE	Flatness	Parallelism	Measuring force [N]	Measurable module
123-113	0 - 25	0,01 mm	±4 µm	1 µm	4 µm	5-10	0,5 - 6
123-114	25 - 50	0,01 mm	±4 µm	1 µm	4 µm	5-10	0,5 - 6
123-115	50 - 75	0,01 mm	±6 µm	1 µm	6 µm	5-10	0,5 - 6
123-116	75 - 100	0,01 mm	±6 µm	1 µm	6 µm	5-10	0,5 - 6

No.	Remarks	Mass [g]	L [mm]	a [mm]	b [mm]	c [mm]	d [mm]	e [mm]	t [mm]
123-113	Disks have carbide tips	200	39,7	4,5	9,2	25	20	9,8	0,7
123-114	Disks have carbide tips	250	65,6	5,4	11	31	20	9,8	0,7
123-115	Disks have carbide tips	300	90,7	5,5	12,2	50	20	9,8	0,7
123-116	Disks have carbide tips	375	112,5	5,5	13,5	60	20	9,8	0,7

All products to be sold to commercial customers.
Product illustrations are without obligation. Product descriptions, in particular any and all technical specifications, are only binding when explicitly agreed upon.

Digimatic Disc Micrometers Non-Rotating Spindle Type

Functions	Series 369
ORIGIN	●
ABS / INC (INC ZERO)	●
Auto Power OFF after 20 min. non use	●
Low voltage alarm	●
Function lock	●
HOLD	●

Specifications

Display	LCD, character height 7,5 mm
Measuring face	Hardened steel
Measuring spindle	With spindle lock, ø 6,35 mm, spindle pitch 0,5 mm
Scale	Thimble and sleeve satin chrome finish
Power supply	1 battery SR-44
Battery life	Approx. 2,4 years
Delivered	Including box, key, 1 battery, setting standard (from 25 mm upward)

Optional accessories

No.	Description
05CZA662	Digimatic Cable with Data Button IP Type, 1m, Micrometer Type
05CZA663	Digimatic Cable with Data Button IP Type, 2m, Micrometer Type
06AFM380B	USB Input Tool Direct (Digimatic USB), Digi/Digi2, With Data Button IP Micrometer Type
264-622	U-WAVE fit, IP67 Type, Wireless Transmitter for Micrometer
264-623	U-WAVE fit, Buzzer Type, Wireless Transmitter for Micrometer
264-627	U-WAVE fit Bluetooth, Buzzer Type, Wireless Transmitter for Micrometer
264-626	U-WAVE fit Bluetooth, IP67 Type, Wireless Transmitter for Micrometer
02AZF310	Connection Unit, U-WAVE fit, Waterproof Type

Consumable spares

No.	Description
938882	Battery SR44 1.5V

Series 369

This Digimatic Disc Micrometer allows you to measure a range of different materials.
It offers you the following benefits:

- Non-rotating spindle and disc-shaped measuring surfaces.
- Measuring the root tangent length of spur and helical gears
- Measurable range of gear pitch: 0,5-6 module
- Suitable for measuring felt, rubber, cardboard, fabric etc.

369-250-30

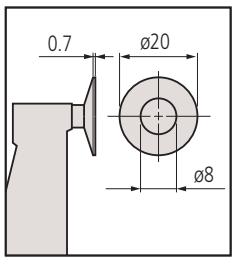

Metric

No.	Range [mm]	Digital step	Maximum Permissible Error J MPE	Flatness	Parallelism	Measuring force [N]	Measurable module	Mass [g]
369-250-30	0 - 25	0,001 mm	±4 µm	1 µm	4 µm	3-8	0,5 - 6	340
369-251-30	25 - 50	0,001 mm	±4 µm	1 µm	4 µm	3-8	0,5 - 6	480
369-252-30	50 - 75	0,001 mm	±6 µm	1 µm	6 µm	3-8	0,5 - 6	635
369-253-30	75 - 100	0,001 mm	±6 µm	1 µm	6 µm	3-8	0,5 - 6	775

No.	L [mm]	a [mm]	b [mm]	c [mm]
369-250-30	58,5	12,9	7	32
369-251-30	83,5	12,9	9,8	47
369-252-30	108,5	12,9	11,2	60
369-253-30	112,5	5,5	13,5	60

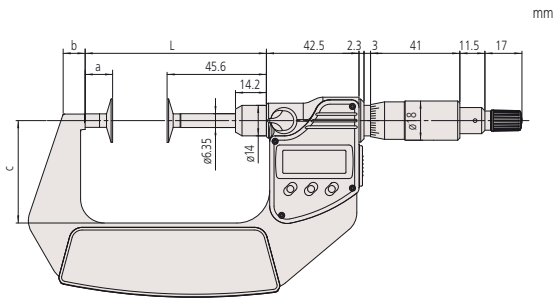

0-75 mm

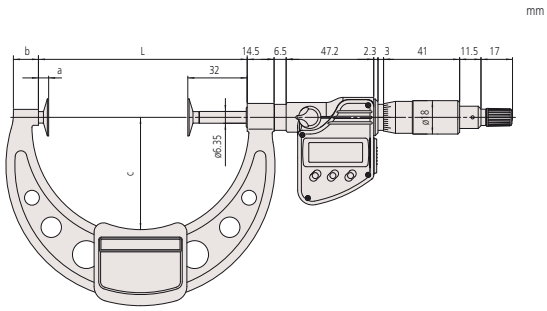

75-100 mm

All products to be sold to commercial customers.
Product illustrations are without obligation. Product descriptions, in particular any and all technical specifications, are only binding when explicitly agreed upon.

Mitutoyo

ABSOLUTE Digimatic Disc Micrometers Quickmike

Series 369 and Series 227

ABSOLUTE®

IP65

369-411-20
369-412-20

The ABSOLUTE Digimatic Disc Micrometer Quickmike allows you to measure with a fast spindle feed of 10 mm/rev.
It offers you the following benefits:

- Suitable for measuring felt, rubber, cardboard, fabric etc.
- Suitable to measure "root tangent length" of spur gears and helical gears.
- With a non-rotating spindle and disc-shaped measuring surface.
- Measuring force is adjustable for various kinds of workpieces (series 227)

369-411-20

227-221-20

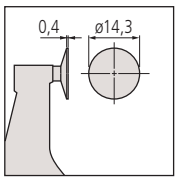

Series 227 without recess

Functions	Series 369 and Series 227
ON/OFF	●
ORIGIN	●
ABS / INC (INC ZERO)	●
Low voltage alarm	●
HOLD	●

Specifications

Display	LCD, character height 10 mm
Measuring face	Hardened steel, micro-lap finish
Measuring spindle	Non-rotating, 10 mm spindle feed
Power supply	1 battery SR-44
Battery life	Approx. 5 years
Delivered	Including box, 1 battery, setting standard (from 25 mm upward)

Optional accessories

No.	Description
05CZA662	Digimatic Cable with Data Button IP Type, 1m, Micrometer Type
05CZA663	Digimatic Cable with Data Button IP Type, 2m, Micrometer Type
06AFM380B	USB Input Tool Direct (Digimatic USB), Digi/Digi2, With Data Button IP Micrometer Type
02AZD880G	U-WAVE-T, Buzzer Type, Wireless Transmitter
02AZD730G	U-WAVE-T, IP67 Type, Wireless Transmitter
02AZD790B	U-WAVE-T Connection Cable B, with Data Button IP Micrometer Type

Consumable spares

No.	Description
938882	Battery SR44 1.5V

Metric

No.	Range [mm]	Digital step	Maximum Permissible Error J MPE	Flatness	Parallelism	Measuring force [N]	Measurable module
369-411-20	0 - 30	0,001 mm	±4 µm	1 µm	4 µm	3-8	0,5 - 6
369-412-20	25 - 55	0,001 mm	±4 µm	1 µm	4 µm	3-8	0,5 - 6

No.	Mass [g]	L [mm]	a [mm]	b [mm]	c [mm]
369-411-20	360	0	8,5	36	13,5
369-412-20	490	25	10,3	47	13,5

Metric

Quickmike type with adjustable measuring force

No.	Range [mm]	Digital step	Maximum Permissible Error J MPE	Flatness	Parallelism	Measuring force settings [N]	Measuring force accuracy (1) [N]
227-221-20	0 - 15	0,001 mm	±4 µm	1 µm	3 µm	0,5 / 1 / 1,5 / 2 / 2,5	±0,1 + (force setting/10)
227-223-20	0 - 10	0,001 mm	±4 µm	1 µm	3 µm	2 / 4 / 6 / 8 / 10	±0,4 + (force setting/10)

No.	Measurable module	Mass [g]	c [mm]	d [mm]	e [mm]
227-221-20	0,4-3	300	5,2	15	13,8
227-223-20	0,4-3	340	5,2	10	18,8

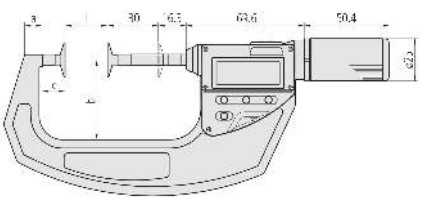

369-411-20, 369-412-20

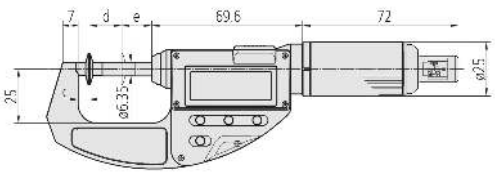

227-221-20, 227-223-20

Ajustable Measuring Force
227-221-20
227-223-20

(1) Only valid for instrument orientation within ±3 degrees of horizontal when measuring.

All products to be sold to commercial customers.
Product illustrations are without obligation. Product descriptions, in particular any and all technical specifications, are only binding when explicitly agreed upon.

Disc Micrometers Non-Rotating Spindle Type

Specifications

Measuring face	Hardened steel, micro-lap finish
Measuring spindle	Spindle pitch 0,5 mm
Scale	Thimble and sleeve satin chrome finish ø18 mm
Delivered	Including box, setting standard (from 25 mm upward), key

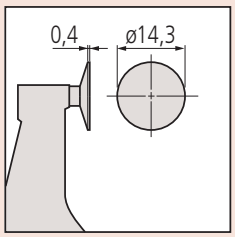

169-101-10 no central recess

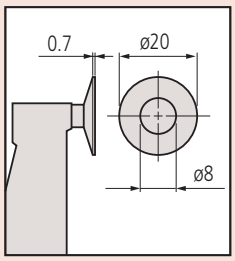

With annular measuring surfaces

Series 169

This Disc Micrometer has a non-rotating spindle and allows you measure a range of different materials.
It offers you the following benefits:

- It features a non-rotating spindle and disc-shaped measuring surfaces.
- Measuring the root tangent length of spur and helical gears
- Measurable range of gear pitch: 0,5-6 module
- It's suitable for measuring materials such as felt, rubber, cardboard and fabric.

169-101-10

169-201-10

Metric

No.	Range [mm]	Graduation	Maximum Permissible Error J MPE	Flatness	Parallelism	Mass [g]	L [mm]	a [mm]	b [mm]	c [mm]
169-101-10	0 - 25	0,01mm	±4 µm	1 µm	3 µm	230	0	13,8	25	5,7
169-201-10	0 - 25	0,01mm	±4 µm	1 µm	4 µm	230	0	13,8	25	5,7
169-202-10	25 - 50	0,01mm	±4 µm	1 µm	4 µm	280	25	13,8	32	5,7
169-205-10	50 - 75	0,01mm	±6 µm	1 µm	6 µm	315	50	12	49	5,5
169-207-10	75 - 100	0,01mm	±6 µm	1 µm	6 µm	400	75	14	63	5,5

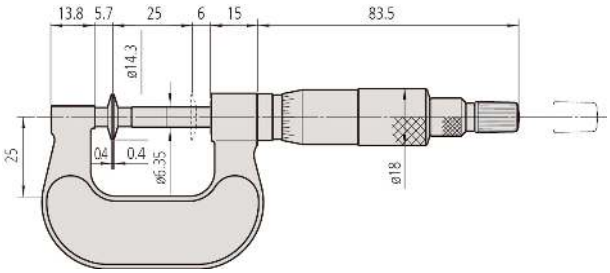

169-101-10

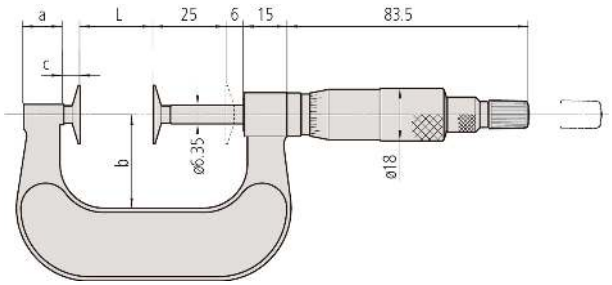

0-50 mm

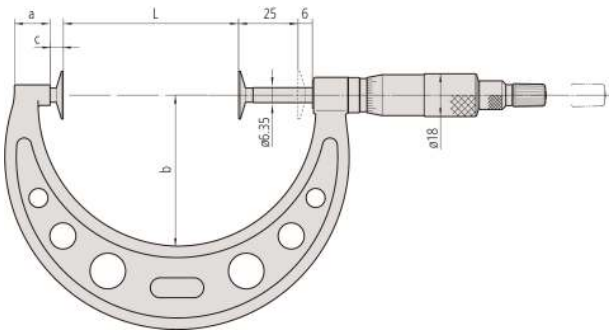

50-100 mm

All products to be sold to commercial customers.
Product illustrations are without obligation. Product descriptions, in particular any and all technical specifications, are only binding when explicitly agreed upon.

Mitutoyo

Digimatic Spline Micrometers

Series 331

This Digimatic Spline Micrometer makes it easy for you to measure grooves and shaped parts. It offers you the following benefits:

- Outstanding accuracy and oil-resistant material used for all plastic parts (IP65)
- Anvil and spindle are of small diameter for measuring splined shafts, slots and keyways.
- Excellent resistance against water and dust (IP65 protection level) enables this micrometer to be used in machining situations that include splashing coolant fluid.

Dust- and Waterproof IP65

TÜVRheinland CERTIFIED

www.tuv.com ID 4011207400

IP65

331-251-30

Functions	Series 331
ORIGIN	●
ABS / INC (INC ZERO)	●
Auto Power OFF after 20 min. non use	●
Low voltage alarm	●
Function lock	
HOLD	●

Specifications

Display	LCD, character height 7,5 mm
Measuring face	Carbide-tipped, micro-lap finish
Measuring spindle	With spindle lock, ø 6,35 mm, spindle pitch 0,5 mm
Scale	Thimble and sleeve satin chrome finish
Power supply	1 battery SR-44
Battery life	Approx. 2,4 years
Delivered	Including box, key, 1 battery, setting standard (from 25 mm upward)

Optional accessories

No.	Description
05CZA662	Digimatic Cable with Data Button IP Type, 1m, Micrometer Type
05CZA663	Digimatic Cable with Data Button IP Type, 2m, Micrometer Type
06AFM380B	USB Input Tool Direct (Digimatic USB), Digi/Digi2, With Data Button IP Micrometer Type
264-622	U-WAVE fit, IP67 Type, Wireless Transmitter for Micrometer
264-623	U-WAVE fit, Buzzer Type, Wireless Transmitter for Micrometer
264-626	U-WAVE fit Bluetooth, IP67 Type, Wireless Transmitter for Micrometer
264-627	U-WAVE fit Bluetooth, Buzzer Type, Wireless Transmitter for Micrometer
02AZF310	Connection Unit, U-WAVE fit, Waterproof Type

Consumable spares

No.	Description
938882	Battery SR44 1.5V

Metric

No.	Range [mm]	Digital step	Maximum Permissible Error J MPE	Flatness	Parallelism	Anvil / Spindle
331-251-30	0 - 25	0,001 mm	±2 µm	0,3 µm	2 µm	Type A, D=3 mm
331-261-30	0 - 25	0,001 mm	±2 µm	0,3 µm	2 µm	Type B, D=2 mm
331-252-30	25 - 50	0,001 mm	±2 µm	0,3 µm	2 µm	Type A, D=3 mm
331-262-30	25 - 50	0,001 mm	±2 µm	0,3 µm	2 µm	Type B, D=2 mm
331-253-30	50 - 75	0,001 mm	±2 µm	0,3 µm	2 µm	Type A, D=3 mm
331-263-30	50 - 75	0,001 mm	±2 µm	0,3 µm	2 µm	Type B, D=2 mm
331-254-30	75 - 100	0,001 mm	±3 µm	0,3 µm	3 µm	Type A, D=3 mm
331-264-30	75 - 100	0,001 mm	±3 µm	0,3 µm	3 µm	Type B, D=2 mm

No.	Measuring force [N]	Mass [g]	L [mm]	a [mm]	b [mm]	c [mm]
331-251-30	5-10	330	58,2	17,5	7,3	32,5
331-261-30	5-10	330	58,2	17,5	7,3	32,5
331-252-30	5-10	470	83,2	17,5	10,1	47
331-262-30	5-10	470	83,2	17,5	10,1	47
331-253-30	5-10	625	108,2	17,5	11,5	60
331-263-30	5-10	625	108,2	17,5	11,5	60
331-254-30	5-10	565	132,8	20,3	16,7	76
331-264-30	5-10	565	132,8	20,3	16,7	76

mm

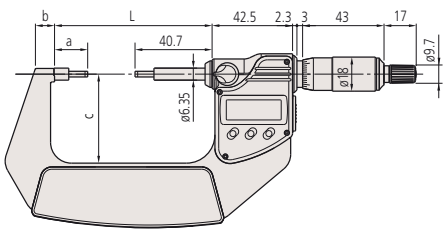

0-75 mm

mm

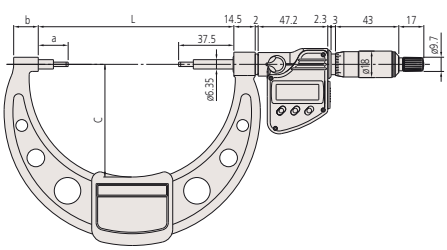

75-100 mm

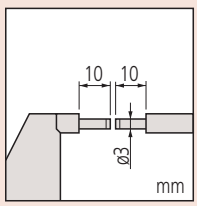

Type A

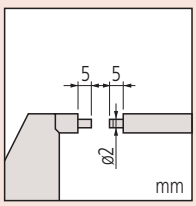

Type B

All products to be sold to commercial customers.
Product illustrations are without obligation. Product descriptions, in particular any and all technical specifications, are only binding when explicitly agreed upon.

Spline Micrometers

Series 111

This Spline Micrometer makes it easy for you to measure grooves and shaped parts.
It offers you the following benefits:

- Stepped measuring surfaces.
- Suitable for measuring grooves, splined shafts, recesses, shaped parts, etc.

Specifications

Measuring face	Carbide-tipped, micro-lap finish, stepped
Measuring spindle	With spindle lock, ø 6,35 mm, spindle pitch 0,5 mm
Scale	Thimble and sleeve satin chrome finish ø18 mm
Delivered	Including box, setting standard (from 25 mm upward), key

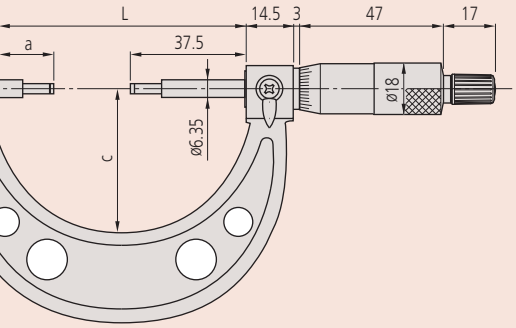

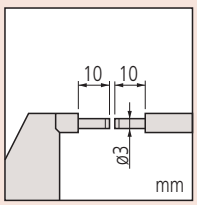

Type A

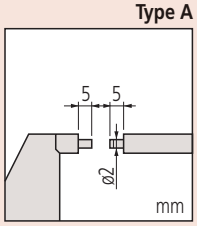

Type B

111-115

Metric

No.	Range [mm]	Graduation	Maximum Permissible Error J MPE	Flatness	Parallelism	Anvil / Spindle	Measuring force [N]	Mass [g]
111-115	0 - 25	0,01 mm	±3 µm	0,3 µm	2 µm	Type A, D=3 mm	5-10	205
111-215	0 - 25	0,01 mm	±3 µm	0,3 µm	2 µm	Type B, D=2 mm	5-10	205
111-116	25 - 50	0,01 mm	±3 µm	0,3 µm	2 µm	Type A, D=3 mm	5-10	305
111-117	50 - 75	0,01 mm	±3 µm	0,3 µm	2 µm	Type A, D=3 mm	5-10	370
111-118	75 - 100	0,01 mm	±4 µm	0,3 µm	3 µm	Type A, D=3 mm	5-10	500
111-119	100 - 125	0,01 mm	±4 µm	0,3 µm	3 µm	Type A, D=3 mm	5-10	655
111-120	125 - 150	0,01 mm	±4 µm	0,3 µm	3 µm	Type A, D=3 mm	5-10	710
111-121	150 - 175	0,01 mm	±5 µm	0,3 µm	3 µm	Type A, D=3 mm	5-10	900
111-122	175 - 200	0,01 mm	±5 µm	0,3 µm	4 µm	Type A, D=3 mm	5-10	1040
111-123	200 - 225	0,01 mm	±5 µm	0,3 µm	4 µm	Type A, D=3 mm	5-10	1245
111-124	225 - 250	0,01 mm	±6 µm	0,3 µm	4 µm	Type A, D=3 mm	5-10	1395
111-125	250 - 275	0,01 mm	±6 µm	0,3 µm	4 µm	Type A, D=3 mm	5-10	1555
111-126	275 - 300	0,01 mm	±6 µm	0,3 µm	5 µm	Type A, D=3 mm	5-10	1975

No.	L [mm]	a [mm]	b [mm]	c [mm]
111-115	54,5	17,5	10	38
111-215	54,5	17,8	10	38
111-116	79,5	17,8	12	49
111-117	104,5	17,8	14	60
111-118	132,3	20,3	16,7	79
111-119	157,7	20,7	18,8	94
111-120	183,1	21,1	19,1	106
111-121	208,3	21,3	18,2	118
111-122	233,7	21,7	16,8	130
111-123	257,5	20,5	18	143
111-124	283,5	21,5	18	156
111-125	308,5	21,5	18	169
111-126	333,5	21,5	18	181

All products to be sold to commercial customers.
Product illustrations are without obligation. Product descriptions, in particular any and all technical specifications, are only binding when explicitly agreed upon.

Digimatic Tube Micrometers

Series 395

This Digimatic Tube Micrometer allows you to measure curved surfaces such as the wall thickness of tubes, bearings and rings.

Dust- and Waterproof IP65

www.tuv.com ID 4011207400

395-251-30

Metric — Model with spherical anvil

No.	Range [mm]	Digital step	Maximum Permissible Error J MPE	Flatness	Anvil / Spindle	Measuring force [N]	Mass [g]	D [mm]	b [mm]	c [mm]
395-251-30	0 - 25	0,001 mm	±2 µm	0,3 µm	Type A, spherical anvil SR=4 mm/flat spindle	5-10	270	15	9	25
395-252-30	25 - 50	0,001 mm	±2 µm	0,3 µm	Type A, spherical anvil SR=4 mm/flat spindle	5-10	330	15	9,8	32
395-253-30	50 - 75	0,001 mm	±2 µm	0,3 µm	Type A, spherical anvil SR=4 mm/flat spindle	5-10	470	19	12,6	47
395-254-30	75 - 100	0,001 mm	±3 µm	0,3 µm	Type A, spherical anvil SR=4 mm/flat spindle	5-10	625	20	14	60

Metric — Model with spherical anvil and spindle

No.	Range [mm]	Digital step	Maximum Permissible Error J MPE	Anvil / Spindle	Measuring force [N]	Mass [g]	D [mm]	b [mm]	c [mm]
395-271-30	0 - 25	0,001 mm	±2 µm	Type B, spherical anvil and spindle SR=4 mm	5-10	270	15	9	25
395-272-30	25 - 50	0,001 mm	±2 µm	Type B, spherical anvil and spindle SR=4 mm	5-10	330	15	9,8	32
395-273-30	50 - 75	0,001 mm	±2 µm	Type B, spherical anvil and spindle SR=4 mm	5-10	470	19	12,6	32
395-274-30	75 - 100	0,001 mm	±3 µm	Type B, spherical anvil and spindle SR=4 mm	5-10	625	20	14	60

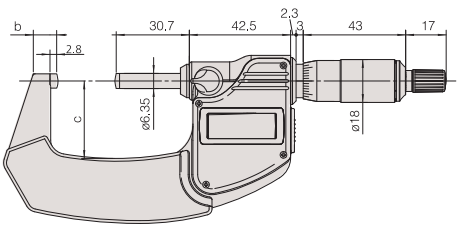

0-50 mm

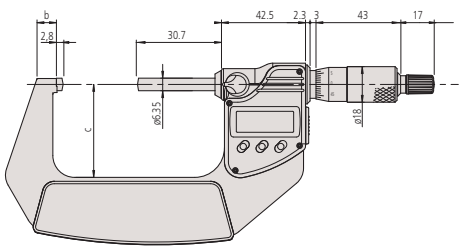

50-100 mm

Functions	Series 395
ORIGIN	●
ABS / INC (INC ZERO)	●
Auto Power OFF after 20 min. non use	●
Low voltage alarm	●
Function lock	●
HOLD	●

Specifications

Display	LCD, character height 7,5 mm
Measuring face	Carbide-tipped, micro-lap finish
Measuring spindle	With spindle lock, ø 6,35 mm, spindle pitch 0,5 mm
Scale	Thimble and sleeve satin chrome finish
Power supply	1 battery SR-44
Battery life	Approx. 2,4 years
Delivered	Including box, key, 1 battery, setting standard (from 25 mm upward)

Optional accessories

No.	Description
05CZA662	Digimatic Cable with Data Button IP Type, 1m, Micrometer Type
05CZA663	Digimatic Cable with Data Button IP Type, 2m, Micrometer Type
06AFM380B	USB Input Tool Direct (Digimatic USB), Digi/Digi2, With Data Button IP Micrometer Type
264-622	U-WAVE fit, IP67 Type, Wireless Transmitter for Micrometer
264-623	U-WAVE fit, Buzzer Type, Wireless Transmitter for Micrometer
264-626	U-WAVE fit Bluetooth, IP67 Type, Wireless Transmitter for Micrometer
264-627	U-WAVE fit Bluetooth, Buzzer Type, Wireless Transmitter for Micrometer
02AZF310	Connection Unit, U-WAVE fit, Waterproof Type

Consumable spares

No.	Description
938882	Battery SR44 1.5V

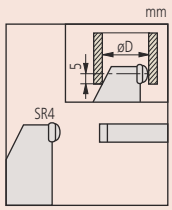

Type A

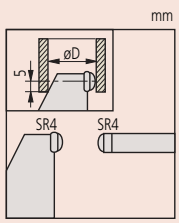

Type B

All products to be sold to commercial customers.
Product illustrations are without obligation. Product descriptions, in particular any and all technical specifications, are only binding when explicitly agreed upon.

Digimatic Tube Micrometers

Functions	Series 395
ORIGIN	●
ABS / INC (INC ZERO)	●
Auto Power OFF after 20 min. non use	●
Low voltage alarm	●
Function lock	●
HOLD	●

Specifications

Display	LCD, character height 7,5 mm
Measuring face	Carbide-tipped, micro-lap finish (spindle) anvil: hardened steel
Measuring spindle	With spindle lock, ø 6,35 mm, spindle pitch 0,5 mm
Scale	Thimble and sleeve satin chrome finish
Power supply	1 battery SR-44
Battery life	Approx. 2,4 years
Delivered	Including box, key, 1 battery, setting standard (from 25 mm upward)

Optional accessories

No.	Description
05CZA662	Digimatic Cable with Data Button IP Type, 1m, Micrometer Type
06AFM380B	USB Input Tool Direct (Digimatic USB), Digi/Digi2, With Data Button IP Micrometer Type
05CZA663	Digimatic Cable with Data Button IP Type, 2m, Micrometer Type
264-622	U-WAVE fit, IP67 Type, Wireless Transmitter for Micrometer
264-623	U-WAVE fit, Buzzer Type, Wireless Transmitter for Micrometer
264-626	U-WAVE fit Bluetooth, IP67 Type, Wireless Transmitter for Micrometer
264-627	U-WAVE fit Bluetooth, Buzzer Type, Wireless Transmitter for Micrometer
02AZF310	Connection Unit, U-WAVE fit, Waterproof Type

Consumable spares

No.	Description
938882	Battery SR44 1.5V

Series 395

This Digimatic Tube Micrometer allows you to measure curved surfaces such as the wall thickness of tubes, bearings and rings. Spherical and cylindrical anvil type.

Dust- and Waterproof IP65

IP65

395-261-30

395-262-30

395-263-30

395-264-30

Metric

No.	Range [mm]	Digital step	Maximum Permissible Error J MPE	Flatness	Anvil / Spindle	Measuring force [N]	Mass [g]	L [mm]	D [mm]
395-261-30	0 - 25	0,001 mm	±3 µm	0,3 µm	Type A, pin D=1,8 mm/ flat spindle	3-8	270	4	2
395-262-30	0 - 25	0,001 mm	±3 µm	0,3 µm	Type B, spherical pin D=3,5 mm/flat spindle	3-8	270	4	3,6
395-263-30	0 - 25	0,001 mm	±3 µm	0,3 µm	Type C, spherical pin D=4,7 mm/flat spindle	3-8	310	12	4,8
395-264-30	0 - 25	0,001 mm	±3 µm	0,3 µm	Type D, cylindrical pin D=8 mm/flat spindle	3-8	310	22	8,2

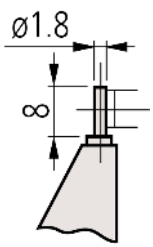

Type A

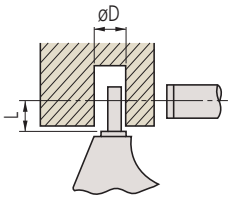

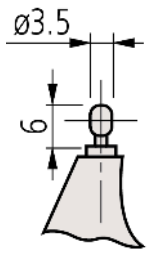

Type B

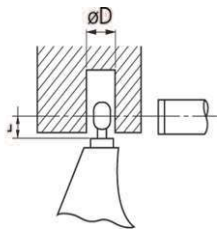

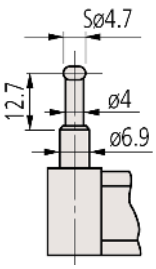

Type C

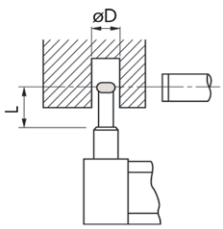

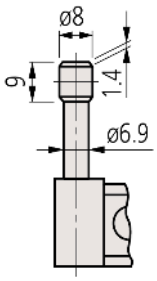

Type D

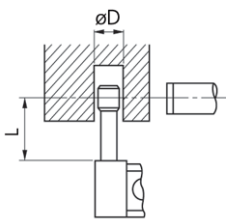

All products to be sold to commercial customers.
Product illustrations are without obligation. Product descriptions, in particular any and all technical specifications, are only binding when explicitly agreed upon.

Mitutoyo

Tube Micrometers

Series 115

This Tube Micrometer allows you to measure curved surfaces such as the wall thickness of tubes, bearings and rings.

115-215

Metric

No.	Range [mm]	Graduation	Maximum Permissible Error J MPE	Flatness	Anvil / Spindle	Mass [g]	L [mm]	D [mm]
115-302	0 - 25	0,01 mm	±3 µm	0,6 µm	Type A, pin D=1,8 mm/ flat spindle	180	4	2
115-308	0 - 25	0,01 mm	±3 µm	0,6 µm	Type B, spherical pin D=3,5 mm/ flat spindle	180	4	3,6
115-315	0 - 25	0,01 mm	±3 µm	0,6 µm	Type C, spherical pin D=4,7 mm/ flat spindle	180	12	4,8
115-316	0 - 25	0,01 mm	±3 µm	0,6 µm	Type D, cylindrical pin D=8 mm/ flat spindle	180	22	8,2
115-303	25 - 50	0,01 mm	±3 µm	0,6 µm	Type A, pin D=1,8 mm/ flat spindle	240	4	2
115-309	25 - 50	0,01 mm	±3 µm	0,6 µm	Type B, spherical pin D=3,5 mm/ flat spindle	240	4	3,6

Metric

Model with spherical anvil

No.	Range [mm]	Graduation	Maximum Permissible Error J MPE	Flatness	Anvil / Spindle	Mass [g]	D [mm]
115-115	0 - 25	0,01 mm	±3 µm	0,6 µm	Type E, sperical anvil SR=4 mm/ flat spindle	180	10
115-116	25 - 50	0,01 mm	±3 µm	0,6 µm	Type E, sperical anvil SR=4 mm/ flat spindle	240	11
115-117	50 - 75	0,01 mm	±3 µm	0,6 µm	Type E, sperical anvil SR=4 mm/ flat spindle	315	17
115-118	75 - 100	0,01 mm	±4 µm	0,6 µm	Type E, sperical anvil SR=4 mm/ flat spindle	375	18

Metric

Model with spherical anvil and spindle face

No.	Range [mm]	Graduation	Maximum Permissible Error J MPE	Anvil / Spindle	Mass [g]	D [mm]
115-215	0 - 25	0,01 mm	±3 µm	Type F, spherical anvil and spindle SR=4 mm	180	10
115-216	25 - 50	0,01 mm	±3 µm	Type F, spherical anvil and spindle SR=4 mm	240	11
115-217	50 - 75	0,01 mm	±3 µm	Type F, spherical anvil and spindle SR=4 mm	315	17
115-218	75 - 100	0,01 mm	±4 µm	Type F, spherical anvil and spindle SR=4 mm	375	18

Specifications

Measuring face	Spindle and anvil: carbide-tipped, micro-lap finish (115-1xx, 115-2xx) spindle: carbide-tipped anvil: hardened steel (115-3xx)
Measuring spindle	With spindle lock, ø 6,35 mm, spindle pitch 0,5 mm
Scale	Thimble and sleeve satin chrome finish ø18 mm
Delivered	Including box, setting standard (from 25 mm upward), key

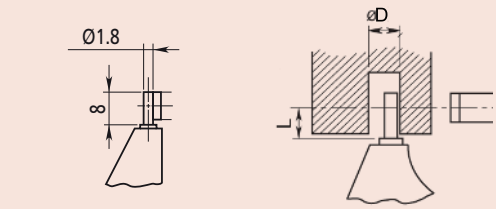

Type A

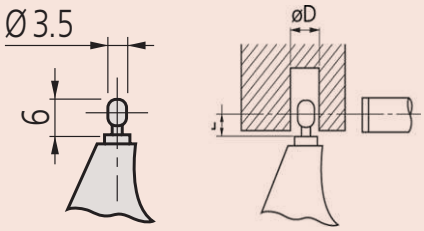

Type B

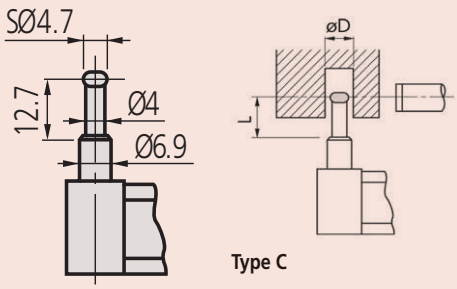

Type C

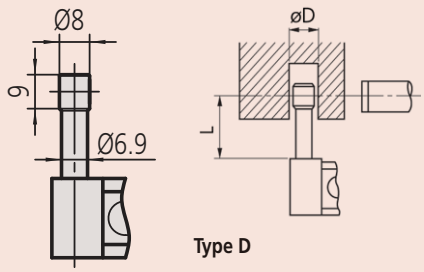

Type D

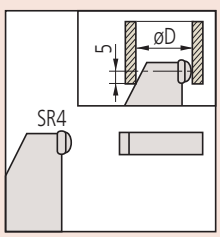

Type E

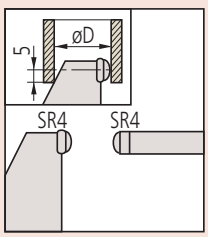

Type F

All products to be sold to commercial customers.
Product illustrations are without obligation. Product descriptions, in particular any and all technical specifications, are only binding when explicitly agreed upon.

Digimatic Point Micrometers

Functions	Series 342
ORIGIN	●
ABS / INC (INC ZERO)	●
Auto Power OFF after 20 min. non use	●
Low voltage alarm	●
Function lock	●

Specifications

Display	LCD, character height 7,5 mm
Measuring face	Carbide-tipped and conical spindle and anvil, measuring point radius 0,3 mm
Measuring spindle	With spindle lock, ø 6,35 mm, spindle pitch 0,5 mm
Scale	Thimble and sleeve satin chrome finish
Power supply	1 battery SR-44
Battery life	Approx. 2,4 years
Delivered	Including box, key, 1 battery, setting standard (from 25 mm upward)

Optional accessories

No.	Description
05CZA662	Digimatic Cable with Data Button IP Type, 1m, Micrometer Type
05CZA663	Digimatic Cable with Data Button IP Type, 2m, Micrometer Type
06AFM380B	USB Input Tool Direct (Digimatic USB), Digi/Digi2, With Data Button IP Micrometer Type
264-622	U-WAVE fit, IP67 Type, Wireless Transmitter for Micrometer
264-623	U-WAVE fit, Buzzer Type, Wireless Transmitter for Micrometer
264-626	U-WAVE fit Bluetooth, IP67 Type, Wireless Transmitter for Micrometer
264-627	U-WAVE fit Bluetooth, Buzzer Type, Wireless Transmitter for Micrometer
02AZF310	Connection Unit, U-WAVE fit, Waterproof Type

Consumable spares

No.	Description
938882	Battery SR44 1.5V

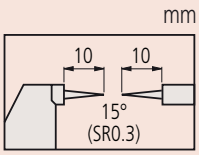

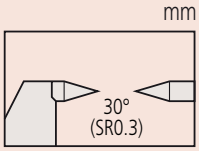

Series 342

Dust- and Waterproof IP65
TÜVRheinland CERTIFIED
www.tuv.com ID 4011207400

IP65

This Digimatic Point Micrometer features a pointed anvil and spindle, and offers the following benefits:

- Its pointed anvil and spindle has a choice of included angle, ending in small-radius contact points.
- You can use it to measure grooves, steps and similar.

342-251-30

Metric

No.	Range [mm]	Digital step	Maximum Permissible Error J MPE	Anvil / Spindle	Measuring force [N]	Mass [g]	L [mm]	a [mm]	b [mm]	c [mm]
342-251-30	0 - 25	0,001 mm	±2 µm	15°	3-8	330	58,2	12,5	7,3	32
342-261-30	0 - 25	0,001 mm	±2 µm	30°	3-8	330	58,2	12,5	7,3	32
342-252-30	25 - 50	0,001 mm	±2 µm	15°	3-8	470	83,2	12,5	10,1	47
342-262-30	25 - 50	0,001 mm	±2 µm	30°	3-8	470	83,2	12,5	10,1	47
342-253-30	50 - 75	0,001 mm	±2 µm	15°	3-8	625	108,2	12,5	11,5	60
342-263-30	50 - 75	0,001 mm	±2 µm	30°	3-8	625	108,2	12,5	11,5	60
342-254-30	75 - 100	0,001 mm	±3 µm	15°	3-8	565	132,8	15,3	16,7	76
342-264-30	75 - 100	0,001 mm	±3 µm	30°	3-8	565	132,8	15,3	16,7	76

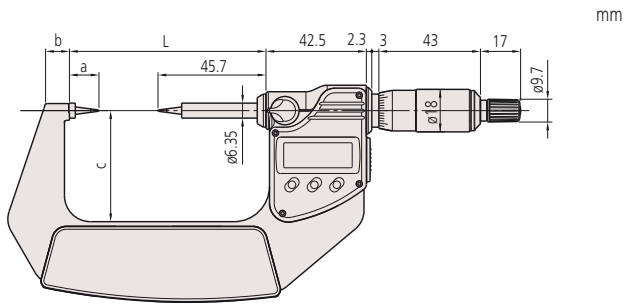

0-75 mm

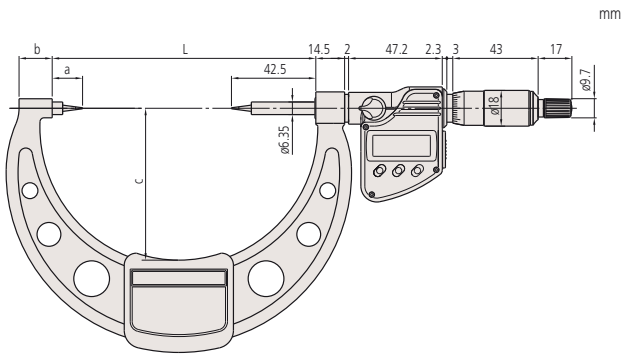

75-100 mm

All products to be sold to commercial customers.
Product illustrations are without obligation. Product descriptions, in particular any and all technical specifications, are only binding when explicitly agreed upon.

Mitutoyo

Point Micrometers

Series 112

This Point Micrometer features a pointed anvil and spindle, and offers the following benefits:

- Its pointed anvil and spindle has a choice of included angle, ending in small-radius contact points.
- You can use it to measure grooves, steps and similar.

112-201

Metric

Carbide tip

No.	Range [mm]	Graduation	Maximum Permissible Error J MPE	Anvil / Spindle	Mass [g]	L [mm]	a [mm]	b [mm]	c [mm]
112-165	0 - 25	0,01 mm	±3 µm	15°	205	55,3	12,8	10	38
112-213	0 - 25	0,01 mm	±3 µm	30°	205	55,3	12,8	10	38
112-166	25 - 50	0,01 mm	±3 µm	15°	305	80,3	12,8	12	49
112-214	25 - 50	0,01 mm	±3 µm	30°	305	80,3	12,8	12	49
112-167	50 - 75	0,01 mm	±3 µm	15°	370	105,3	12,8	14	60
112-215	50 - 75	0,01 mm	±3 µm	30°	370	105,3	12,8	14	60
112-168	75 - 100	0,01 mm	±4 µm	15°	500	132,8	15,3	17	79
112-216	75 - 100	0,01 mm	±4 µm	30°	500	132,8	15,3	17	79

Metric

Hardened steel tip

No.	Range [mm]	Graduation	Maximum Permissible Error J MPE	Anvil / Spindle	Mass [g]	L [mm]	a [mm]	b [mm]	c [mm]
112-153	0 - 25	0,01 mm	±3 µm	15°	205	55,3	12,8	10	38
112-201	0 - 25	0,01 mm	±3 µm	30°	205	55,3	12,8	10	38
112-154	25 - 50	0,01 mm	±3 µm	15°	305	80,3	12,8	12	49
112-202	25 - 50	0,01 mm	±3 µm	30°	305	80,3	12,8	12	49
112-155	50 - 75	0,01 mm	±3 µm	15°	370	105,3	12,8	14	60
112-203	50 - 75	0,01 mm	±3 µm	30°	370	105,3	12,8	14	60
112-156	75 - 100	0,01 mm	±4 µm	15°	500	132,8	15,3	17	79
112-204	75 - 100	0,01 mm	±4 µm	30°	500	132,8	15,3	17	79

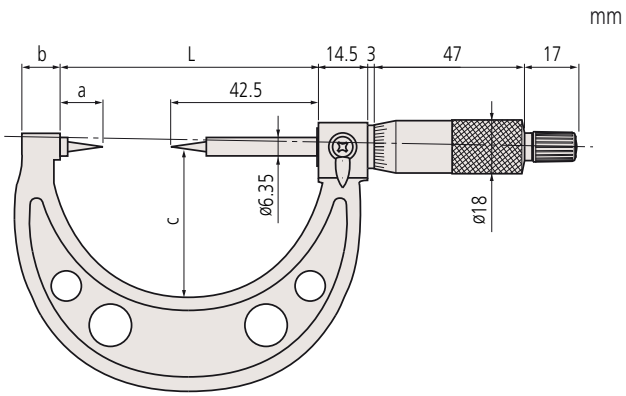

Specifications

Measuring face	Carbide pointed or hardened steel spindle and anvil, measuring point radius 0,3 mm
Measuring spindle	With spindle lock, ø 6,35 mm, spindle pitch 0,5 mm
Scale	Thimble and sleeve satin chrome finish ø18 mm
Measuring force	3-8 N
Delivered	Including box, setting standard (from 25 mm upward), key

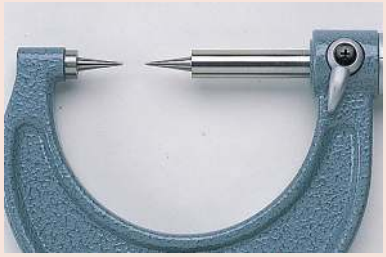

Type angle : 15°

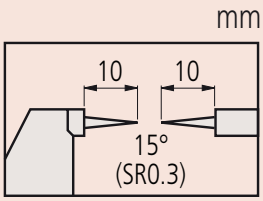

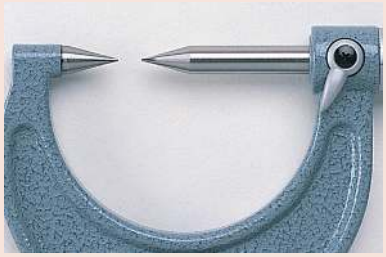

Type angle : 30°

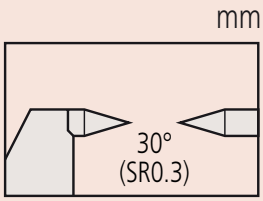

All products to be sold to commercial customers.
Product illustrations are without obligation. Product descriptions, in particular any and all technical specifications, are only binding when explicitly agreed upon.

Crimp Height Micrometers

Series 342/ Series 112

This Crimp Height Micrometer that features a flat anvil and pointed spindle offers you the following benefits:

- It allows you to measure the crimped height of electrical contacts.
- Outstanding accuracy and oil-resistant material used for all plastic parts
- Excellent resistance against water and dust (IP65 protection level) enables this micrometer to be used in machining situations that include splashing coolant fluid.

IP65

ABSOLUTE®

342-451-20

Functions	Series 342/ Series 112: 342-271-30	342-451-20
ON/OFF		●
ORIGIN	●	●
ABS / INC (INC ZERO)	●	●
Auto Power OFF after 20 min. non use	●	
Low voltage alarm	●	●
Function lock	●	
HOLD	●	●

Specifications

Measuring face	Hardened steel
Measuring spindle	With spindle lock, ø 6.35 mm, spindle pitch 0.5 mm (342-271-30, 112-401) without spindle lock ø 6.35 mm, spindle feed 10 mm (342-451-20)
Scale	Thimble and sleeve satin chrome finish ø18 mm (112-401, 342-271-30)
Power supply	1 battery SR-44
Battery life	Approx. 2,4 years (342-271-30), 5 years under normal use (342-451-20)
Delivered	Including box, 1 battery

Optional accessories

No.	Description
05CZA662	Digimatic Cable with Data Button IP Type, 1m, Micrometer Type
05CZA663	Digimatic Cable with Data Button IP Type, 2m, Micrometer Type
06AFM380B	USB Input Tool Direct (Digimatic USB), Digi/Digi2, With Data Button IP Micrometer Type
264-622	U-WAVE fit, IP67 Type, Wireless Transmitter for Micrometer
264-623	U-WAVE fit, Buzzer Type, Wireless Transmitter for Micrometer
264-626	U-WAVE fit Bluetooth, IP67 Type, Wireless Transmitter for Micrometer
264-627	U-WAVE fit Bluetooth, Buzzer Type, Wireless Transmitter for Micrometer
02AZF310	Connection Unit, U-WAVE fit, Waterproof Type
02AZD880G	U-WAVE-T, Buzzer Type, Wireless Transmitter
02AZD730G	U-WAVE-T, IP67 Type, Wireless Transmitter
02AZD790B	U-WAVE-T Connection Cable B, with Data Button IP Micrometer Type

02AZD880G, 02AZD730G, 02AZD790B
Wireless Sytem for 342-451-20

112-401

342-271-30

342-451-20

Metric Analog model

No.	Range [mm]	Graduation	Maximum Permissible Error J MPE	Measuring force [N]	Mass [g]
112-401	0 - 25	0,01 mm	±3 µm	3-8	165

Metric Digital model

No.	Range [mm]	Digital step	Maximum Permissible Error J MPE	Measuring force [N]	Mass [g]
342-271-30	0 - 20	0,001 mm	±3 µm	3-8	270

Metric Quickmike

No.	Range [mm]	Digital step	Maximum Permissible Error J MPE	Measuring force [N]	Mass [g]
342-451-20	0 - 15	0,001 mm	±3 µm	4-6	270

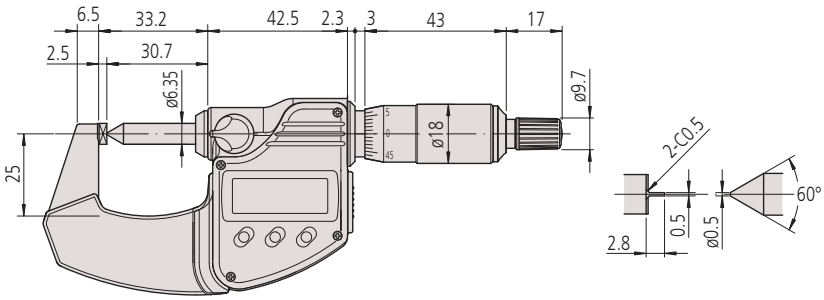

342-271-30

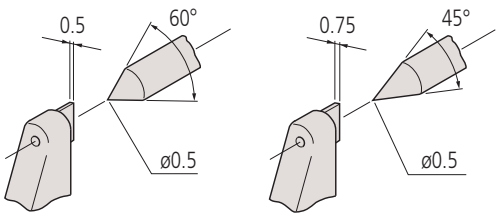

342-271-30
112-401

342-451-20

All products to be sold to commercial customers.
Product illustrations are without obligation. Product descriptions, in particular any and all technical specifications, are only binding when explicitly agreed upon.

Mitutoyo

Digimatic Blade Micrometers

Series 422

This Digimatic Blade Micrometer is designed to help you measure hard-to-reach features. It offers the following benefits:

- Blade-shaped anvil and spindle for measuring the groove diameter of shafts, keyways and other hard-to reach features
- Non-rotating spindle

422-230-30

Metric

No.	Range [mm]	Digital step	Maximum Permissible Error J MPE	Parallel-ism	Anvil / Spindle	Mass [g]	L [mm]	a [mm]	b [mm]	c [mm]
422-230-30	0 - 25	0,001 mm	±3 µm	3 µm	Type A, hardened steel t=0,75 mm	365	65,6	12,5	11	31
422-260-30	0 - 25	0,001 mm	±3 µm	3 µm	Type B, hardened steel, t=0,4 mm	365	65,6	12,5	11	31
422-270-30	0 - 25	0,001 mm	±3 µm	3 µm	Type C, carbide t=0,75 mm	365	65,6	12,5	11	31
422-271-30	0 - 25	0,001 mm	±3 µm	3 µm	Type D, carbide t=0,4 mm	365	65,6	12,5	11	31
422-231-30	25 - 50	0,001 mm	±3 µm	3 µm	Type A, hardened steel t=0,75 mm	565	90,7	12,6	12,2	50
422-261-30	25 - 50	0,001 mm	±3 µm	3 µm	Type B, hardened steel, t=0,4 mm	565	90,7	12,6	12,2	50
422-232-30	50 - 75	0,001 mm	±3 µm	3 µm	Type A, hardened steel t=0,75 mm	465	105,3	13,5	14,1	57
422-233-30	75 - 100	0,001 mm	±4 µm	4 µm	Type A, hardened steel t=0,75 mm	580	132,8	16	16,7	76

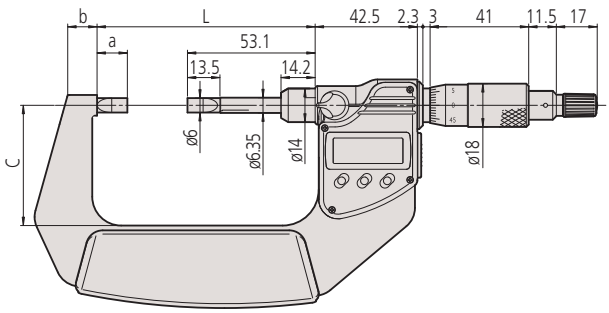

0-50 mm

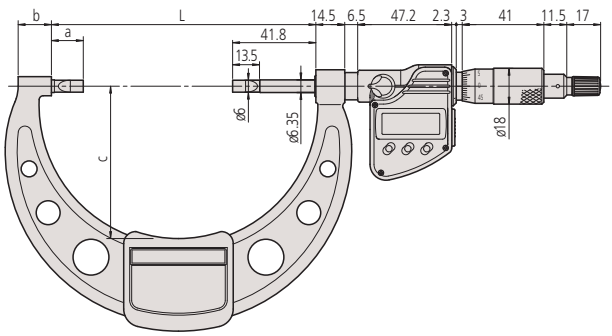

50-100 mm

Functions	Series 422
ORIGIN	●
ABS / INC (INC ZERO)	●
Auto Power OFF after 20 min. non use	●
Low voltage alarm	●
Function lock	●
HOLD	●

Specifications

Display	LCD, character height 7,5 mm
Measuring face	Hardened steel or carbide-tipped
Measuring spindle	With spindle lock, ø 6,35 mm, spindle pitch 0,5 mm
Scale	Thimble and sleeve satin chrome finish
Measuring force	3-8 N
Power supply	1 battery SR-44
Battery life	Approx. 2,4 years
Delivered	Including box, key, 1 battery, setting standard (from 25 mm upward)

Optional accessories

No.	Description
05CZA662	Digimatic Cable with Data Button IP Type, 1m, Micrometer Type
05CZA663	Digimatic Cable with Data Button IP Type, 2m, Micrometer Type
06AFM380B	USB Input Tool Direct (Digimatic USB), Digi/Digi2, With Data Button IP Micrometer Type
264-622	U-WAVE fit, IP67 Type, Wireless Transmitter for Micrometer
264-623	U-WAVE fit, Buzzer Type, Wireless Transmitter for Micrometer
264-626	U-WAVE fit Bluetooth, IP67 Type, Wireless Transmitter for Micrometer
264-627	U-WAVE fit Bluetooth, Buzzer Type, Wireless Transmitter for Micrometer
02AZF310	Connection Unit, U-WAVE fit, Waterproof Type

Consumable spares

No.	Description
938882	Battery SR44 1.5V

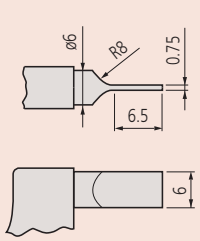

Type A (hardened steel)

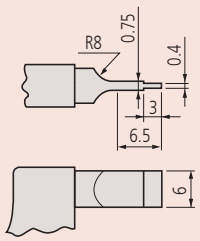

Type B (hardened steel)

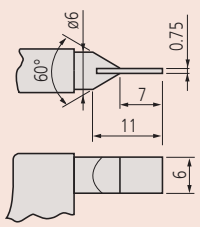

Type C (carbide-tipped)

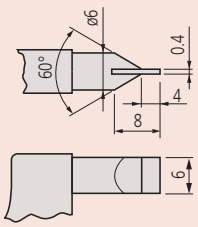

Type D (carbide-tipped)

All products to be sold to commercial customers.
Product illustrations are without obligation. Product descriptions, in particular any and all technical specifications, are only binding when explicitly agreed upon.

ABSOLUTE Digimatic Blade Micrometers Quickmike

Functions	Series 422
ON/OFF	●
ORIGIN	●
ABS / INC (INC ZERO)	●
Low voltage alarm	●
HOLD	●

Specifications

Display	LCD, character height 10 mm
Measuring face	Hardened steel
Measuring spindle	Non-rotating, 10 mm spindle feed
Power supply	1 battery SR-44
Battery life	Approx. 5 years
Delivered	Including box, setting standard (from 25 mm upward), 1 battery

Optional accessories

No.	Description
05CZA662	Digimatic Cable with Data Button IP Type, 1m, Micrometer Type
05CZA663	Digimatic Cable with Data Button IP Type, 2m, Micrometer Type
06AFM380B	USB Input Tool Direct (Digimatic USB), Digi/Digi2, With Data Button IP Micrometer Type
02AZD880G	U-WAVE-T, Buzzer Type, Wireless Transmitter
02AZD730G	U-WAVE-T, IP67 Type, Wireless Transmitter
02AZD790B	U-WAVE-T Connection Cable B, with Data Button IP Micrometer Type

Consumable spares

No.	Description
938882	Battery SR44 1.5V

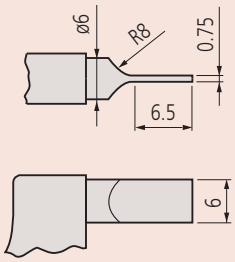

Type A (hardened steel)

Series 422

ABSOLUTE IP65

This ABSOLUTE Digimatic Blade Micrometer Quickmike is designed to help you measure hard-to-reach features. It offers the following benefits:

- Blade-shaped anvil and spindle for measuring the groove diameter of shafts, keyways and other hard-to reach features
- Non-rotating spindle
- Fast spindle feed of 10 mm/revolution

422-411-20

Metric

No.	Range [mm]	Digital step	Maximum Permissible Error J MPE	Parallelism	Anvil / Spindle	Measuring force [N]	Mass [g]	L [mm]	a [mm]	b [mm]	c [mm]
422-411-20	0 - 30	0,001 mm	±3 µm	3 µm	Type A, hardened steel t=0,75 mm	5-12	350	0	8,5	36	13,5
422-412-20	25 - 55	0,001 mm	±3 µm	3 µm	Type A, hardened steel t=0,75 mm	5-12	490	25	10,3	47	13,5

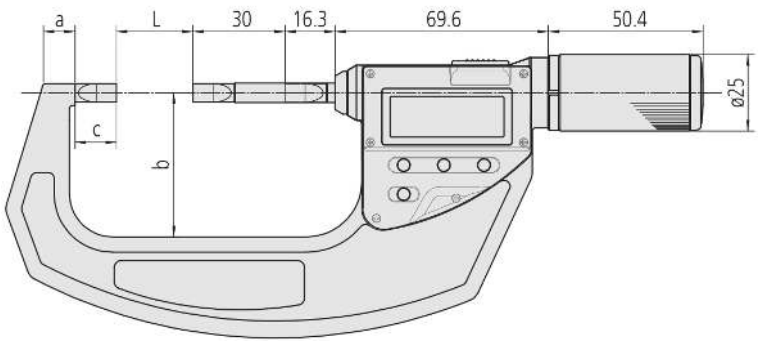

All products to be sold to commercial customers.
Product illustrations are without obligation. Product descriptions, in particular any and all technical specifications, are only binding when explicitly agreed upon.

Mitutoyo

Blade Micrometers

Series 122

This Blade Micrometer is designed to help you measure hard-to-reach features.
It offers the following benefits:

- Blade-shaped anvil and spindle for measuring the groove diameter of shafts, keyways a.s.o.
- Non-rotating spindle.

122-101-10

122-105-10

Metric

No.	Range [mm]	Graduation	Maximum Permissible Error J MPE	Parallelism	Anvil / Spindle
122-101-10	0 - 25	0,01 mm	±3 µm	3 µm	Type A, hardened steel t=0,75 mm
122-111-10	0 - 25	0,01 mm	±3 µm	3 µm	Type B, hardened steel t=0,4 mm
122-161-10	0 - 25	0,01 mm	±3 µm	3 µm	Type C, carbide t=0,75 mm
122-141-10	0 - 25	0,01 mm	±3 µm	3 µm	Type D, carbide t=0,4 mm
122-102-10	25 - 50	0,01 mm	±3 µm	3 µm	Type A, hardened steel t=0,75 mm
122-112-10	25 - 50	0,01 mm	±3 µm	3 µm	Type B, hardened steel t=0,4 mm
122-162-10	25 - 50	0,01 mm	±3 µm	3 µm	Type C, carbide t=0,75 mm
122-142-10	25 - 50	0,01 mm	±3 µm	3 µm	Type D, carbide t=0,4 mm
122-103-10	50 - 75	0,01 mm	±3 µm	3 µm	Type A, hardened steel t=0,75 mm
122-104-10	75 - 100	0,01 mm	±4 µm	4 µm	Type A, hardened steel t=0,75 mm
122-105-10	100 - 125	0,01 mm	±4 µm	4 µm	Type A, hardened steel t=0,75 mm
122-106-10	125 - 150	0,01 mm	±4 µm	4 µm	Type A, hardened steel t=0,75 mm
122-107-10	150 - 175	0,01 mm	±5 µm	5 µm	Type A, hardened steel t=0,75 mm
122-108-10	175 - 200	0,01 mm	±5 µm	5 µm	Type A, hardened steel t=0,75 mm
122-109-10	200 - 225	0,01 mm	±5 µm	5 µm	Type A, hardened steel t=0,75 mm
122-110-10	225 - 250	0,01 mm	±6 µm	6 µm	Type A, hardened steel t=0,75 mm
122-115-10	250 - 275	0,01 mm	±6 µm	6 µm	Type A, hardened steel t=0,75 mm
122-116-10	275 - 300	0,01 mm	±6 µm	6 µm	Type A, hardened steel t=0,75 mm

No.	Mass [g]	L [mm]	a [mm]	b [mm]	c [mm]
122-101-10	260	0	7,8	32	15
122-111-10	260	0	7,8	32	14,7
122-161-10	275	0	7,8	32	14,7
122-141-10	275	0	7,8	32	14,7
122-102-10	300	25	12,2	49	14,5
122-112-10	300	25	12,2	49	14,5
122-162-10	315	25	12,2	49	14,5
122-142-10	315	25	12,2	49	14,5
122-103-10	360	50	14,6	60	14,5
122-104-10	525	75	16,7	79	17,5
122-105-10	670	100	18,8	94	17,9
122-106-10	775	125	19,1	106	18,3
122-107-10	950	150	18,2	118	18,5
122-108-10	1140	175	16,8	130	18,9
122-109-10	1300	200	18	143	17,7
122-110-10	1450	225	18	156	18,7
122-115-10	1600	250	18	169	18,7
122-116-10	2020	275	18	181	18,7

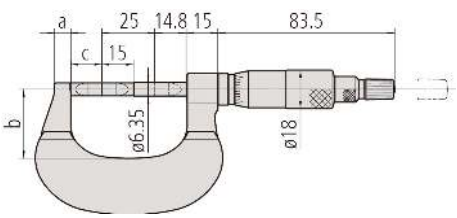

Models up to 25 mm measuring range

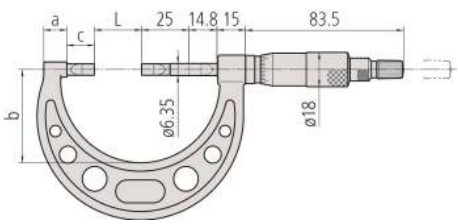

Models over 25 mm measuring range

Specifications

Measuring face	Hardened steel or carbide-tipped
Measuring spindle	ø6,35 mm, spindle pitch 0,5 mm
Scale	Thimble and sleeve satin chrome finish ø18 mm
Measuring force	3 - 8 N
Delivered	Including box, setting standard (from 25 mm upward), key

mm

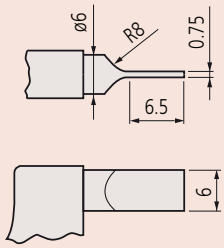

Type A (hardened steel)

mm

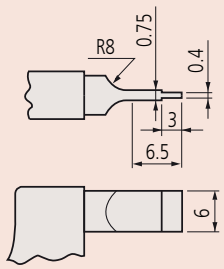

Type B (hardened steel)

mm

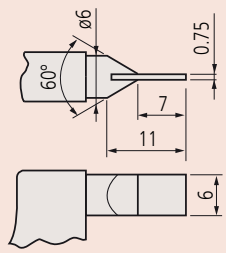

Type C (carbide-tipped)

mm

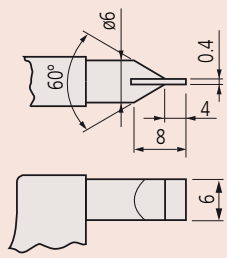

Type D (carbide-tipped)

All products to be sold to commercial customers.
Product illustrations are without obligation. Product descriptions, in particular any and all technical specifications, are only binding when explicitly agreed upon.

Digimatic V-Anvil Micrometers

Functions	Series 314
ABS / INC (INC ZERO)	■
Auto Power OFF after 20 min. non use	■
Low voltage alarm	■
Function lock	■
HOLD	■
2 x PRESET	■

Specifications

Display	LCD, character height 7,5 mm
Measuring face	Prism angle 60°
Measuring spindle	With spindle lock, ø 6,35 mm, spindle pitch 0,75 mm
Scale	Thimble and sleeve satin chrome finish
Power supply	1 battery SR-44
Battery life	Approx. 2,4 years
Delivered	Including box, setting standard, key, 1 battery

Optional accessories

No.	Description
05CZA662	Digimatic Cable with Data Button IP Type, 1m, Micrometer Type
05CZA663	Digimatic Cable with Data Button IP Type, 2m, Micrometer Type
06AFM380B	USB Input Tool Direct (Digimatic USB), Digi/Digi2, With Data Button IP Micrometer Type
264-622	U-WAVE fit, IP67 Type, Wireless Transmitter for Micrometer
264-623	U-WAVE fit, Buzzer Type, Wireless Transmitter for Micrometer
264-626	U-WAVE fit Bluetooth, IP67 Type, Wireless Transmitter for Micrometer
264-627	U-WAVE fit Bluetooth, Buzzer Type, Wireless Transmitter for Micrometer
02AZF310	Connection Unit, U-WAVE fit, Waterproof Type

Consumable spares

No.	Description
938882	Battery SR44 1.5V

Series 314

This Digimatic V-Anvil Micrometer helps you measure cutting tools and taps.
It offers the following benefits:

- It measures the outside diameter of cutting tools (such as taps, reamers, end mills) which have three flutes.
- V-anvils with a centreline groove are available for measuring the pitch diameter of taps by the single-wire method.

314-251-30

Metric

No.	Range [mm]	Digital step	Maximum Permissible Error J MPE	Flatness	Measuring force [N]	Setting standard	Remarks	Mass [g]
314-251-30	1 - 15	0,001 mm	±4 µm	0,3 µm (spindle), 1 µm (anvil)	3-8	167-327 ø 5 mm	With groove	275
314-261-30	1 - 15	0,001 mm	±4 µm	0,3 µm (spindle), 1 µm (anvil)	3-8	167-327 ø 5 mm	-	275
314-252-30	10 - 25	0,001 mm	±4 µm	0,3 µm (spindle), 1 µm (anvil)	5-10	167-328 ø 10 mm	With groove	410
314-262-30	10 - 25	0,001 mm	±4 µm	0,3 µm (spindle), 1 µm (anvil)	5-10	167-328 ø 10 mm	-	410
314-253-30	25 - 40	0,001 mm	±5 µm	0,3 µm (spindle), 1 µm (anvil)	5-10	167-329 ø 25 mm	-	465

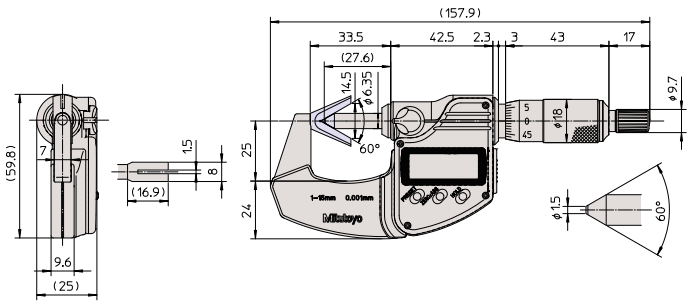

1 - 15 mm

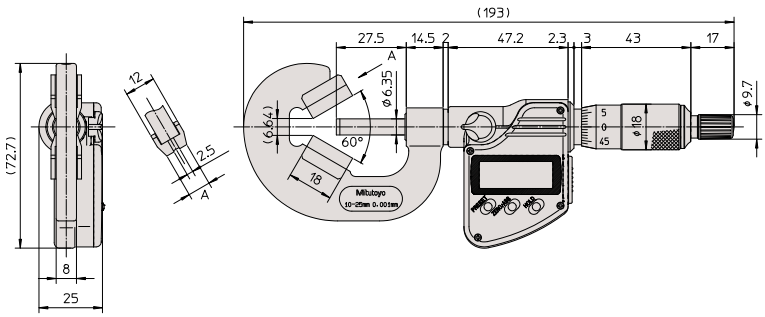

10 - 25 mm

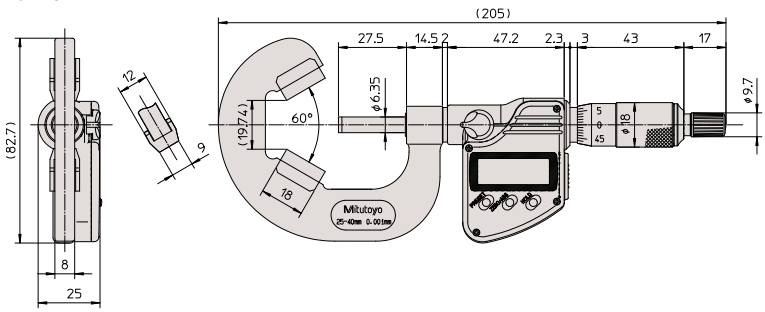

25 - 40 mm

All products to be sold to commercial customers.
Product illustrations are without obligation. Product descriptions, in particular any and all technical specifications, are only binding when explicitly agreed upon.

Mitutoyo

V-Anvil Micrometers

Series 114

This V-Anvil Micrometer helps you measure cutting tools and taps.
It offers the following benefits:

- It measures the outside diameter of cutting tools (such as taps, reamers, end mills) which have three or five flutes.
- V-anvils with a centreline groove are available for measuring the pitch diameter of taps by the single-wire method.

114-204

114-121

Metric

For 3-flute cutting tools (60°)

No.	Range [mm]	Graduation	Maximum Permissible Error J MPE	Flatness	Measuring force [N]	Setting standard	Remarks	Mass [g]	a [mm]
114-101	1 - 15	0,01 mm	±4 µm	0,6 µm (spindle), 1,3 µm (anvil)	5-10	167-327 ø 5 mm	With groove	120	0,5
114-161	1 - 15	0,01 mm	±4 µm	0,6 µm (spindle), 1,3 µm (anvil)	5-10	167-327 ø 5 mm	-	120	0,5
114-204	2.3 - 25	0,01 mm	±4 µm	0,6 µm (spindle), 1,3 µm (anvil)	5-10	167-327 ø 5 mm	-	290	0,5
114-102	10 - 25	0,01 mm	±4 µm	0,6 µm (spindle), 1,3 µm (anvil)	5-10	167-328 ø 10 mm	With groove	280	6,2
114-162	10 - 25	0,01 mm	±4 µm	0,6 µm (spindle), 1,3 µm (anvil)	5-10	167-328 ø 10 mm	-	280	6,2
114-103	25 - 40	0,01 mm	±5 µm	0,6 µm (spindle), 1,3 µm (anvil)	5-10	167-329 ø 25 mm	-	400	19,14
114-104	40 - 55	0,01 mm	±6 µm	0,6 µm (spindle), 1,3 µm (anvil)	5-10	167-330 ø 40 mm	-	465	32,13
114-105	55 - 70	0,01 mm	±6 µm	0,6 µm (spindle), 1,3 µm (anvil)	5-10	167-331 ø 55 mm	-	675	45,12
114-106	70 - 85	0,01 mm	±7 µm	0,6 µm (spindle), 1,3 µm (anvil)	5-10	167-332 ø 70 mm	-	910	58,11
114-107	85 - 100	0,01 mm	±7 µm	0,6 µm (spindle), 1,3 µm (anvil)	5-10	167-333 ø 85 mm	-	1160	71,1
114-108	100 - 115	0,01 mm	±8 µm	0,6 µm (spindle), 1,3 µm (anvil)	5-10	167-334 ø 100 mm	-	1480	84,1
114-109	115 - 130	0,01 mm	±8 µm	0,6 µm (spindle), 1,3 µm (anvil)	5-10	167-335 ø 115 mm	-	2080	97,09
114-110	130 - 145	0,01 mm	±9 µm	0,6 µm (spindle), 1,3 µm (anvil)	5-10	167-336 ø 130 mm	-	2880	110,1

Metric

For 5-flute cutting tools (108°)

No.	Range [mm]	Graduation	Maximum Permissible Error J MPE	Flatness	Measuring force [N]	Setting standard	Remarks	Mass [g]
114-121	5 - 25	0,01 mm	±4 µm	0,6 µm (spindle), 1,3 µm (anvil)	5-10	167-327 ø 5 mm	With groove	255
114-165	5 - 25	0,01 mm	±4 µm	0,6 µm (spindle), 1,3 µm (anvil)	5-10	167-327 ø 5 mm	-	255
114-137	2.3 - 25	0,01 mm	±4 µm	0,6 µm (spindle), 1,3 µm (anvil)	5-10	167-327 ø 5 mm	-	220
114-122	25 - 45	0,01 mm	±5 µm	0,6 µm (spindle), 1,3 µm (anvil)	5-10	167-329 ø 25 mm	-	400
114-123	45 - 65	0,01 mm	±6 µm	0,6 µm (spindle), 1,3 µm (anvil)	5-10	167-331 ø 55 mm	-	540
114-124	65 - 85	0,01 mm	±7 µm	0,6 µm (spindle), 1,3 µm (anvil)	5-10	167-332 ø 70 mm	-	760

Specifications

Measuring face	Prism angle 60°/108°, carbide tipped spindle hardened anvil (114-204, 114-137 carbide tipped anvil/spindle)
Measuring spindle	With spindle lock, ø6,35 mm, spindle pitch 0,75 mm
Scale	Thimble and sleeve satin chrome finish ø18 mm
Delivered	Including box, setting standard, key

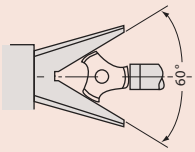

For 3-flute cutting tools

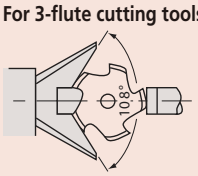

For 5-flute cutting tools

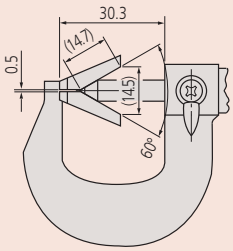

114-101, 114-161

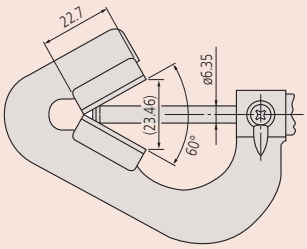

114-204

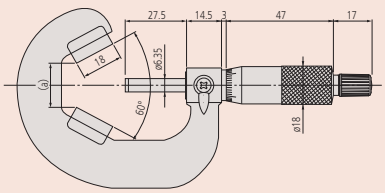

114-102 to 114-110

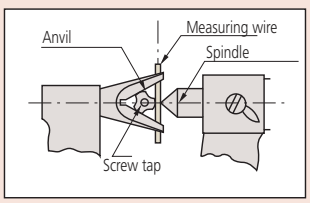

For 114-101, 114-102, 114-121

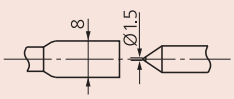

Plain anvil model

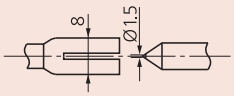

Grooved anvil model

All products to be sold to commercial customers.
Product illustrations are without obligation. Product descriptions, in particular any and all technical specifications, are only binding when explicitly agreed upon.

Can Seam Micrometers

Series 147

This Can Seam Micrometer allows you to measure different types of can seams. It offers the following benefits:

- Designed to measure the width, height and depth of can seams.
- Three types are available, for steel, aluminium and spray cans.

Specifications

Measuring face	Hardened steel
Scale	Thimble and sleeve satin chrome finish ø13 mm
Delivered	Including box, key

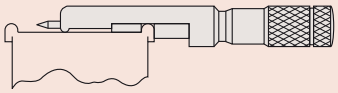

147-103
For steel cans

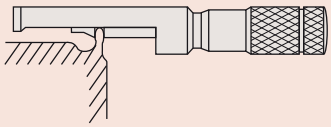

147-105
For aluminium cans

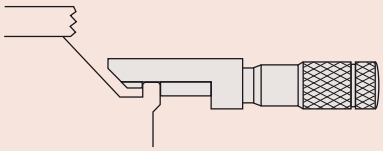

147-202
For spray cans

147-103

147-105

147-202

Metric

No.	Range [mm]	Graduation	Maximum Permissible Error J MPE	Remarks	Mass [g]
147-103	0 - 13	0,01 mm	±3 µm	For steel cans	65
147-105	0 - 13	0,01 mm	±3 µm	For aluminium cans	65
147-202	0 - 13	0,01 mm	±3 µm	For spray cans	65

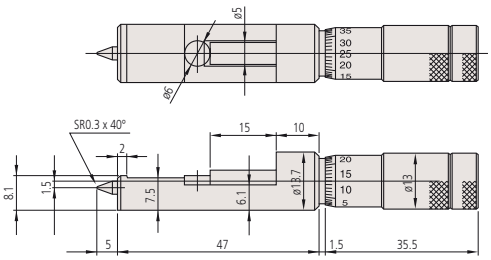

147-103

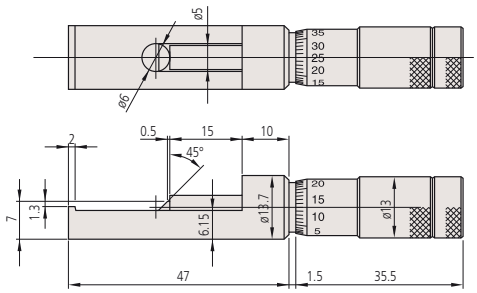

147-105

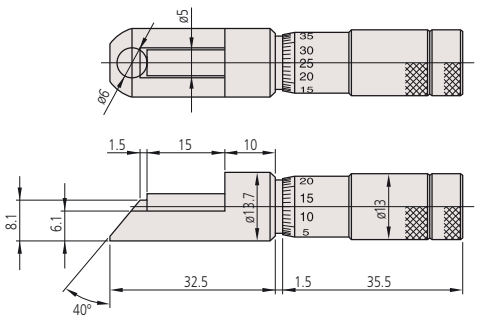

147-202

All products to be sold to commercial customers.
Product illustrations are without obligation. Product descriptions, in particular any and all technical specifications, are only binding when explicitly agreed upon.

Mitutoyo

Hub Micrometers

Series 147

This Hub Micrometer is designed with a very small throat depth, allowing you to measure hub thickness, shouldered features inside a bore and bearing bushings.

147-301

Metric

No.	Range [mm]	Graduation	Maximum Permissible Error J MPE	Flatness	Parallelism	Measuring force [N]	Mass [g]
147-301	0 - 25	0,01 mm	±2 µm	0,6 µm	3 µm	5-10	135
147-302	25 - 50	0,01 mm	±2 µm	0,6 µm	3 µm	5-10	150
147-303	50 - 75	0,01 mm	±2 µm	0,6 µm	3 µm	5-10	170
147-304	75 - 100	0,01 mm	±3 µm	0,6 µm	3 µm	5-10	185

No.	L [mm]	A [mm]	B [mm]	C [mm]	H [mm]
147-301	0	6	8,5	13,5	17,5
147-302	25	6,5	11	14	20,5
147-303	50	6,5	11	13	20,5
147-304	75	6,5	11	13	20,5

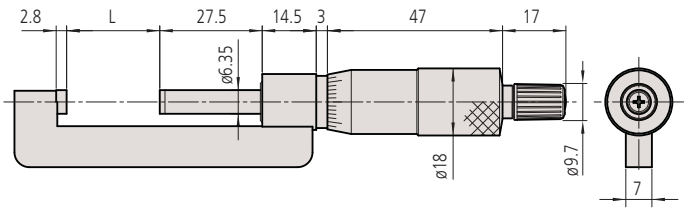

Specifications

Measuring face	Carbide-tipped, micro-lap finish
Measuring spindle	ø6,35 mm, spindle pitch 0,5 mm
Scale	Thimble and sleeve satin chrome finish ø18 mm
Delivered	Including box, setting standard (from 25 mm upward), key

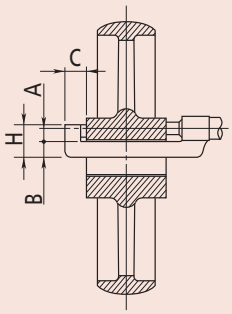

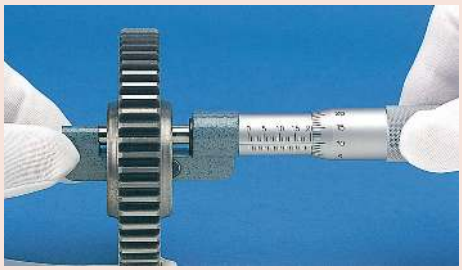

All products to be sold to commercial customers.
Product illustrations are without obligation. Product descriptions, in particular any and all technical specifications, are only binding when explicitly agreed upon.

Digimatic Micrometers Interchangeable Anvil Type

Functions	Series 317
ORIGIN	●
ABS / INC (INC ZERO)	●
Auto Power OFF after 20 min. non use	●
Low voltage alarm	●
Function lock	●
HOLD	●

Specifications

Display	LCD, character height 7,5 mm
Measuring face	Carbide-tipped spindle, hardened anvil
Measuring spindle	With spindle lock, ø 6,35 mm, spindle pitch 0,5 mm
Scale	Thimble and sleeve satin chrome finish
Power supply	1 battery SR-44
Battery life	Approx. 2,4 years
Delivered	Including box, setting standard (from 25 mm upward), key, 1 battery, anvils

Optional accessories

No.	Description
05CZA662	Digimatic Cable with Data Button IP Type, 1m, Micrometer Type
05CZA663	Digimatic Cable with Data Button IP Type, 2m, Micrometer Type
06AFM380B	USB Input Tool Direct (Digimatic USB), Digi/Digi2, With Data Button IP Micrometer Type
264-622	U-WAVE fit, IP67 Type, Wireless Transmitter for Micrometer
264-623	U-WAVE fit, Buzzer Type, Wireless Transmitter for Micrometer
264-626	U-WAVE fit Bluetooth, IP67 Type, Wireless Transmitter for Micrometer
264-627	U-WAVE fit Bluetooth, Buzzer Type, Wireless Transmitter for Micrometer
02AZF310	Connection Unit, U-WAVE fit, Waterproof Type
201218	V-Anvil
950758	Round Base for Series 117, for 0-25mm

Consumable spares

No.	Description
938882	Battery SR44 1.5V
201217	Cylindrical Anvil 3mm
201379	Cylindrical Anvil 5mm
201216	Flat Anvil

950758 with micrometer

Series 317

Dust- and Waterproof IP65

This Digimatic Micrometer Interchangeable Anvil Type lets you measure a range of different features.
It offers the following benefits:

- Measures tubing thickness, shoulder edge distance, rivet head height, etc., with interchangeable anvils (flat anvil, rod anvil, V-anvil).

317-251-30

Metric

No.	Range [mm]	Digital step	Spindle feed error	Flatness	Parallelism	Measuring force [N]	Content of Set	Mass [g]
317-251-30	0 - 25	0,001 mm	3 µm	0,6 µm (spindle), 2 µm (anvil)	3 µm	5-10	Anvils 201217, 201216	335
317-252-30	25 - 50	0,001 mm	3 µm	0,6 µm (spindle), 2 µm (anvil)	3 µm	5-10	Anvils 201379, 201216	360

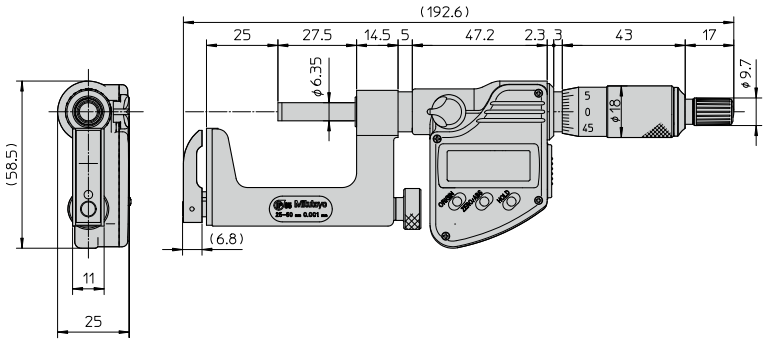

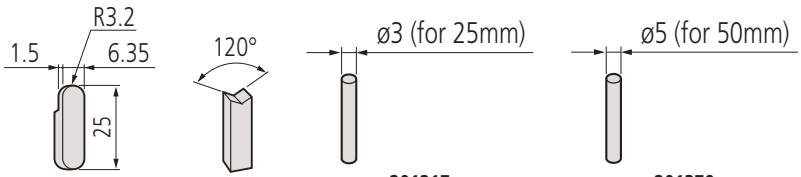

201216 Flat anvil | 201218 V-anvil | 201217 Cylindrical anvil | 201379 Cylindrical anvil

All products to be sold to commercial customers.
Product illustrations are without obligation. Product descriptions, in particular any and all technical specifications, are only binding when explicitly agreed upon.

Micrometers Interchangeable Anvil Type

Series 117

This Micrometer Interchangeable Anvil Type lets you measure a range of different features.
It offers the following benefits:

- Measures tubing thickness, shoulder edge distance, rivet head height, etc., with interchangeable anvils (flat anvil, rod anvil, V-anvil).

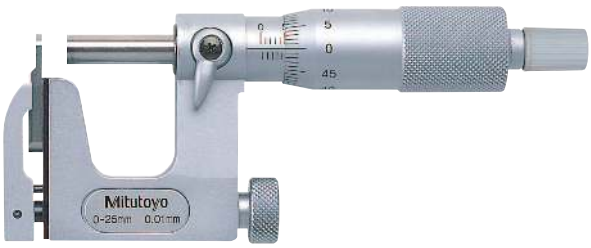

117-101

Metric

No.	Range [mm]	Graduation	Spindle feed error	Flatness	Parallelism	Measuring force [N]	Content of Set	Mass [g]
117-101	0 - 25	0,01 mm	3 µm	0,6 µm (spindle), 2 µm (anvil)	3 µm	5-10	Anvils 201217, 201216	255
117-102	25 - 50	0,01 mm	3 µm	0,6 µm (spindle), 2 µm (anvil)	3 µm	5-10	Anvils 201379, 201216	320

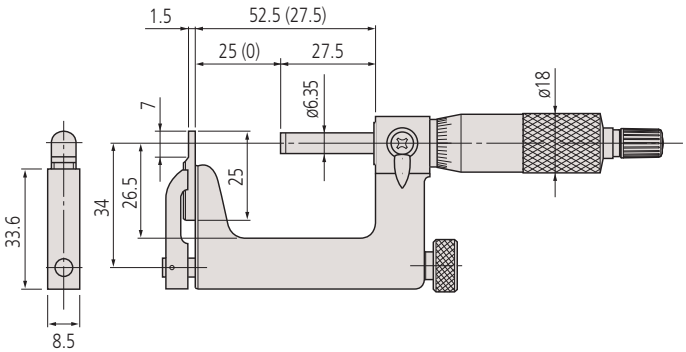

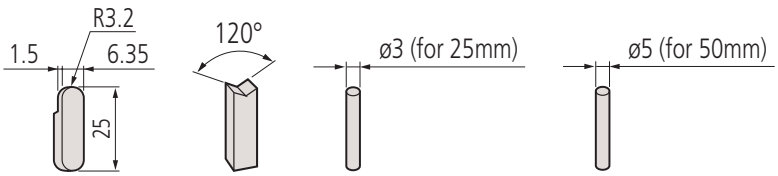

201216
Flat anvil

201218
V-anvil

201217
Cylindrical anvil

201379
Cylindrical anvil

Specifications

Measuring face	Carbide-tipped (spindle)
Measuring spindle	With spindle lock, ø 6,35 mm, spindle pitch 0,5 mm
Scale	Thimble and sleeve satin chrome finish ø18 mm
Delivered	Including box, setting standard (from 25 mm upward), key, anvils

Optional accessories

No.	Description
950758	Round Base for Series 117, for 0-25mm
201218	V-Anvil

Consumable spares

No.	Description
201217	Cylindrical Anvil 3mm
201379	Cylindrical Anvil 5mm
201216	Flat Anvil

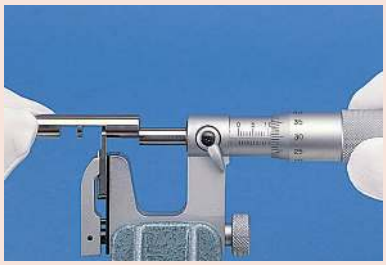

950758 with micrometer

All products to be sold to commercial customers.
Product illustrations are without obligation. Product descriptions, in particular any and all technical specifications, are only binding when explicitly agreed upon.

Limit Micrometers

Specifications

Measuring face	Carbide-tipped with chamfer micro-lap finish
Measuring spindle	With spindle lock, ø 6,35 mm, spindle pitch 0,5 mm
Scale	Thimble and sleeve satin chrome finish ø18 mm
Delivered	Including box, setting standard (from 25 mm upward), key

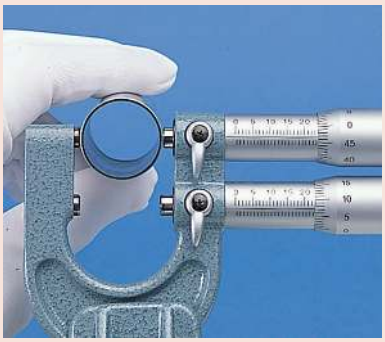

Series 113

This Limit Micrometer offers the following benefits:

- Spindle and Anvil with chamfered edge.
- You can use it as a GO/±NG gauge by setting the upper and lower limits of dimension.

113-102

Metric

No.	Range [mm]	Graduation	Maximum Permissible Error J MPE	Flatness	Parallelism	Measuring force [N]	Mass [g]	L [mm]	a [mm]	c [mm]
113-102	0 - 25	0,01 mm	±3 µm	0,6 µm	3 µm	5-10	340	29,3	15	23
113-103	25 - 50	0,01 mm	±3 µm	0,6 µm	3 µm	5-10	380	54,3	15	37

mm

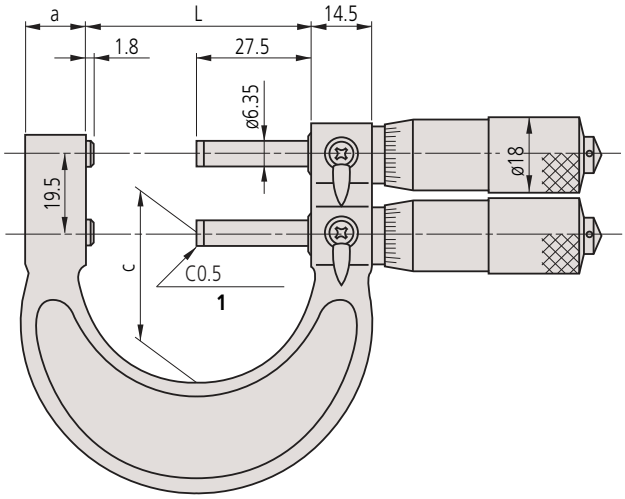

All products to be sold to commercial customers.
Product illustrations are without obligation. Product descriptions, in particular any and all technical specifications, are only binding when explicitly agreed upon.

Indicating Micrometers

Series 510

This is an Indicating Micrometer with a dial comparator that enables you to take fast and highly accurate measurements. It offers you the following benefits:

- It is easy to use when operated one-handed due to retractable anvil.
- Protection level IP54 and large and easy to read characters on the dial plate
- Large dial comparator for easy reading (+/- 0,06 mm)
- Tolerance markers for GO/NG measurements
- 8 mm spindle diameter gives you easy positioning and highly accurate measurements.

510-121

Metric

No.	Range [mm]	Indicating range	Anvil retracting stroke	Spindle feed error	Accuracy dial comparator
510-121	0 - 25	±0,06 mm	2 mm	3 µm	1 µm
510-141	0 - 25	±0,06 mm	2 mm	3 µm	1 µm
510-122	25 - 50	±0,06 mm	2 mm	3 µm	1 µm
510-123	50 - 75	±0,06 mm	2 mm	3 µm	1 µm
510-124	75 - 100	±0,06 mm	2 mm	3 µm	1 µm

No.	Repeatability	Flatness	Parallelism	Graduation	Measuring force [N]	Operating button	Mass [g]	L [mm]	D [mm]
510-121	0,4	0,3 µm	0,6 µm	0,001 mm	5-10	Right	520	31,5	25
510-141	0,4	0,3 µm	0,6 µm	0,001 mm	5-10	Left	520	31,5	25
510-122	0,4	0,3 µm	0,6 µm	0,001 mm	5-10	Left	670	56,5	38
510-123	0,4	0,3 µm	1 µm	0,001 mm	5-10	Left	820	81,5	50
510-124	0,4	0,3 µm	1 µm	0,001 mm	5-10	Left	970	106,5	63

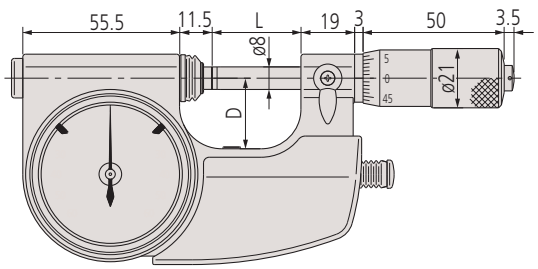

0-25 mm

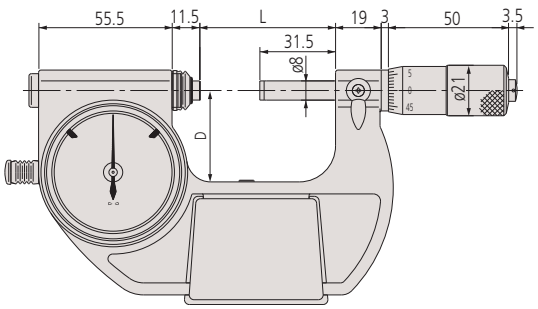

25-100 mm

Specifications

Measuring face	Carbide-tipped, micro-lap finish, ø 8 mm
Scale	Thimble and sleeve satin chrome finish ø21 mm
Delivered	Including box, key

Optional accessories

No.	Description
04AZA124	Workpiece Stopper Indicating Micrometer, 23mm
04AZA125	Workpiece Stopper Indicating Micrometer, 20,5mm
04AZA126	Workpiece Stopper Indicating Micrometer, 15mm

		Diameter range of workpiece supported		
Measuring range mm	Nr.	A Ø mm	B Ø mm	C Ø mm
0– 25	**510-121**	–	4–16	15– 25
25– 50	**510-122**	25–37	30–42	41– 50
50– 75	**510-123**	50–61	54–66	65– 75
75–100	**510-124**	75–87	80–92	91–100

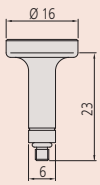

04AZA124 Workpiece stop A

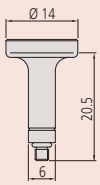

04AZA125 Workpiece stop B

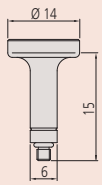

04AZA126 Workpiece stop C

Adjusting screw for dial comparator ± 5 µm

All products to be sold to commercial customers.
Product illustrations are without obligation. Product descriptions, in particular any and all technical specifications, are only binding when explicitly agreed upon.

Indicating Snap Gauges

Specifications

Measuring face	Carbide-tipped, micro-lap finish ø 10,8 mm
Delivered	Including box, workpiece rest

Series 523

This is a Snap Gauge with integrated dial comparator. It offers you the following benefits:

- It is ideal for rapidly inspecting workpieces, especially cylindrical, in batch or mass production situations.
- It can be set with external length standards such as block gauges.
- Easy-to-operate retracting button

523-121

Metric

No.	Range [mm]	Graduation	Indicating range	Anvil retracting stroke	Accuracy dial comparator	Repeatability	Flatness
523-121	0 - 25	0,001 mm	±0,06 mm	2 mm	1 µm	0,4 µm	0,3 µm
523-122	25 - 50	0,001 mm	±0,06 mm	2 mm	1 µm	0,4 µm	0,3 µm
523-123	50 - 75	0,001 mm	±0,06 mm	2 mm	1 µm	0,4 µm	0,3 µm
523-124	75 - 100	0,001 mm	±0,06 mm	2 mm	1 µm	0,4 µm	0,3 µm

No.	Parallelism	Measuring force [N]	Mass [g]	L [mm]	D [mm]
523-121	0,6 µm	5-10	740	31	25
523-122	0,6 µm	5-10	840	56	35
523-123	1 µm	5-10	950	81	47,5
523-124	1 µm	5-10	1080	106	60

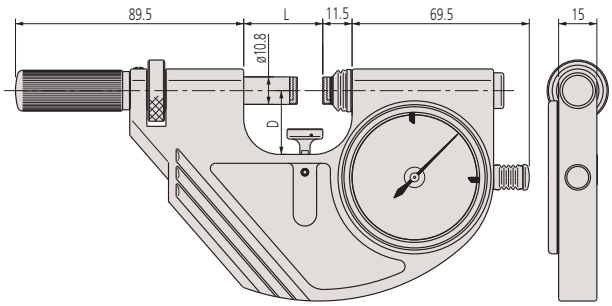

All products to be sold to commercial customers.
Product illustrations are without obligation. Product descriptions, in particular any and all technical specifications, are only binding when explicitly agreed upon.

Snap Gauges

Series 523

This Snap Gauge designed to mount an indicator to suit the measurement application, and offers the following benefits:

- It's ideal for rapidly inspecting workpieces, especially cylindrical, in batch or mass production situations, when you need an indication of where a measurement falls within the tolerance band.
- You can set it with external length standards such as block gauges.
- Easy-to-operate retracting button.

523-141 with optional indicator

Metric

No.	Range [mm]	Anvil retracting stroke	Repeatability	Flatness	Parallelism	Measuring force [N]	Mass [g]	L [mm]	D [mm]
523-141	0 - 25	2 mm	0,4	0,3 µm	0,6 µm	5-10	710	31	25
523-142	25 - 50	2 mm	0,4	0,3 µm	0,6 µm	5-10	810	56	35
523-143	50 - 75	2 mm	0,4	0,3 µm	1 µm	5-10	920	81	47,5
523-144	75 - 100	2 mm	0,4	0,3 µm	1 µm	5-10	1050	106	60

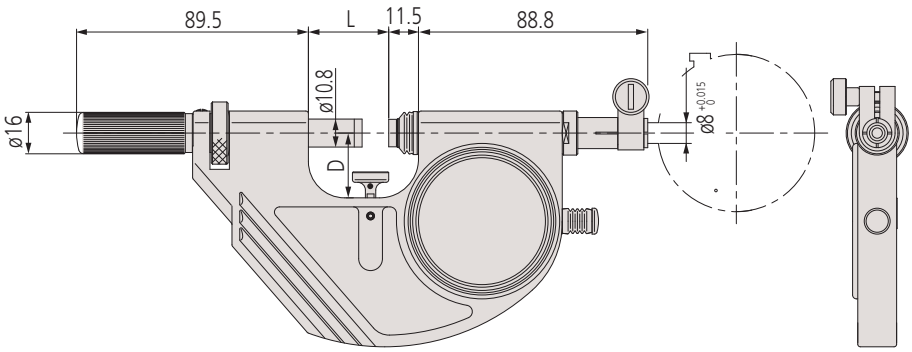

Sample application: with dial indicator

Sample application: with digital indicator

Sample application: with Linear Gauge

Specifications

Measuring face	Carbide-tipped, micro-lap finish ø 10,8 mm
Delivered	Including box, workpiece rest, without indicator

Optional accessories

No.	Description
2109AB-10	Dial Gauge, Flat Back, ISO Type, Jeweled Bearing, Shockproof, 1mm, 0,001mm
2900AB-10	Dial Gauge, Flat Back, ISO Type, One Revolution, Jeweled Bearing, Shockproof, 0,08mm, 0,001mm
543-390B	Digital Indicator ID-C, 12,7mm, 0,001mm, Flat Back

All products to be sold to commercial customers.
Product illustrations are without obligation. Product descriptions, in particular any and all technical specifications, are only binding when explicitly agreed upon.

Dial Gauge Micrometers

Series 107

This Dial Gauge Micrometer allows you to quickly measure mass-produced parts.
It offers the following benefits:

- Designed to mount a dial or a Digital indicator for direct GO/NG judgement of mass-produced parts.
- You can take rapid measurements thanks to its anvil retracting trigger.
- 3 mm anvil retracting stroke.

Specifications

Measuring face	Carbide-tipped, micro-lap finish
Measuring spindle	With spindle lock, ø 6,35 mm, spindle pitch 0,5 mm
Scale	Thimble and sleeve satin chrome finish ø18 mm
Delivered	Including box, setting standard (from 25 mm upward), key

107-201 with optional dial indicator

Metric

No.	Range [mm]	Graduation	Anvil retracting stroke	Spindle feed error	Flatness	Parallelism	Measuring force [N]	Mass [g]	L [mm]	C [mm]
107-201	0 - 25	0,01 mm	3 mm	3 µm	0,6 µm	2 µm	5-10	480	39,5	30
107-202	25 - 50	0,01 mm	3 mm	3 µm	0,6 µm	2 µm	5-10	520	64,5	38
107-203	50 - 75	0,01 mm	3 mm	3 µm	0,6 µm	2 µm	5-10	585	90	45
107-204	75 - 100	0,01 mm	3 mm	3 µm	0,6 µm	3 µm	5-10	630	115,6	65
107-205	100 - 125	0,01 mm	3 mm	3 µm	0,6 µm	3 µm	5-10	725	140,6	79
107-206	125 - 150	0,01 mm	3 mm	3 µm	0,6 µm	3 µm	5-10	810	165,6	93
107-207	150 - 175	0,01 mm	3 mm	3 µm	0,6 µm	3 µm	5-10	1050	190,5	105
107-208	175 - 200	0,01 mm	3 mm	3 µm	0,6 µm	4 µm	5-10	1170	215,5	120

2900AB-10 (1 µm type)

543-390B (1µm)

542-192 (0,1 µm)

Optional
See dial indicators section

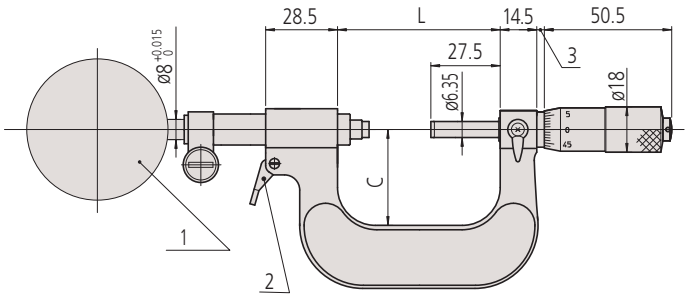

1: dial indicator - 2: retracting trigger (0 - 50 mm)

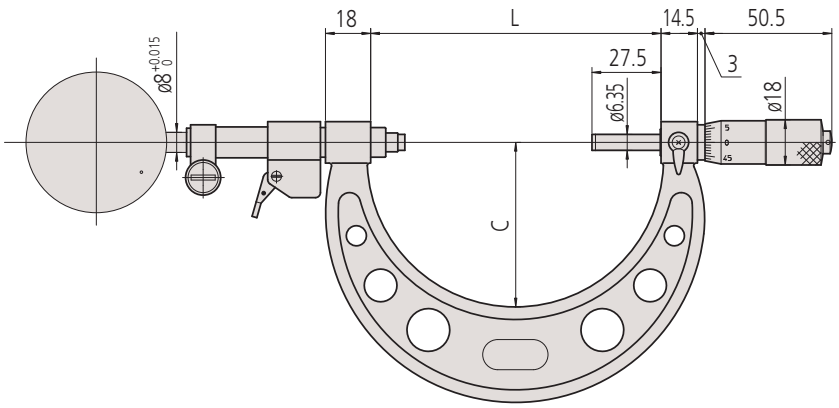

50 - 200 mm

All products to be sold to commercial customers.
Product illustrations are without obligation. Product descriptions, in particular any and all technical specifications, are only binding when explicitly agreed upon.

Mitutoyo

Dial Snap Gauges

Series 201

These Dial Snap Gauges are designed to let you quickly carry out GO/NG judgement of the diameters of cylinders and shafts in machining processes.
They offer the following benefits:

- Wide, flat carbide anvils.
- 2 mm anvil retracting stroke.
- You can adjust the measuring range with an adjustment nut.

201-101 with optional accessories

Metric

No.	Range [mm]	Anvil retracting stroke	Repeatability	Flatness	Parallelism	Measuring force [N]	Remarks	Mass [g]
201-101	0 - 25	2 mm	2 µm	1 µm	5 µm	12-18	For indicator with 8 mm stem	570
201-102	25 - 50	2 mm	2 µm	1 µm	5 µm	12-18	For indicator with 8 mm stem	660
201-103	50 - 75	2 mm	2 µm	1 µm	5 µm	12-18	For indicator with 8 mm stem	700
201-104	75 - 100	2 mm	2 µm	1 µm	5 µm	12-18	For indicator with 8 mm stem	770
201-105	100 - 125	2 mm	2 µm	1 µm	5 µm	12-18	For indicator with 8 mm stem	870
201-106	125 - 150	2 mm	2 µm	1 µm	5 µm	12-18	For indicator with 8 mm stem	950
201-107	150 - 175	2 mm	2 µm	1 µm	5 µm	12-18	For indicator with 8 mm stem	1070
201-108	175 - 200	2 mm	2 µm	1 µm	5 µm	12-18	For indicator with 8 mm stem	1160
201-109	200 - 225	2 mm	2 µm	1 µm	5 µm	12-18	For indicator with 8 mm stem	1260
201-110	225 - 250	2 mm	2 µm	1 µm	5 µm	12-18	For indicator with 8 mm stem	1350
201-111	250 - 275	2 mm	2 µm	1 µm	5 µm	12-18	For indicator with 8 mm stem	1470
201-112	275 - 300	2 mm	2 µm	1 µm	5 µm	12-18	For indicator with 8 mm stem	1620

Specifications

Measuring face	Carbide-tipped, micro-lap finish
Delivered	Including hand guard adjustable workpiece stop

Optional accessories

No.	Description
2046AB	Dial Gauge, Flat Back, ISO Type, 10mm, 0,01mm
2109AB-10	Dial Gauge, Flat Back, ISO Type, Jeweled Bearing, Shockproof, 1mm, 0,001mm
2972AB	Dial Gauge, Flat Back, ISO Type, One Revolution, Shock- & Dustproof, 1mm, 0,01mm
2900AB-10	Dial Gauge, Flat Back, ISO Type, One Revolution, Jeweled Bearing, Shockproof, 0,08mm, 0,001mm
21DZA000	Protector for Indicator (plastic cover)

**201-101 with optional accessories:
Stand 156-101-10
and dial indicator**

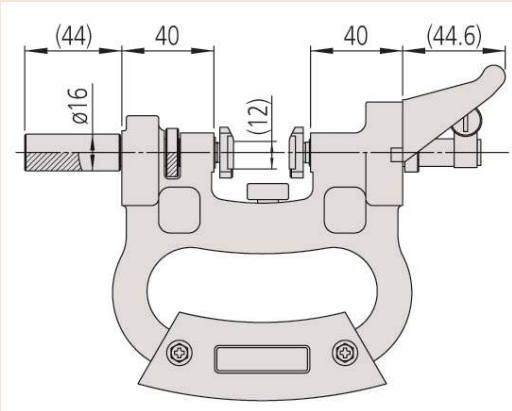

All products to be sold to commercial customers.
Product illustrations are without obligation. Product descriptions, in particular any and all technical specifications, are only binding when explicitly agreed upon.

Internal Groove Micrometers

Series 146

This Internal Groove Micrometer is designed to measure the width and location of grooves cut into bore walls.
It offers the following features:

- Two-directional ratchet stop

Specifications

Measuring face	Hardened steel
Measuring spindle	Spindle pitch 0,5 mm
Scale	Thimble and sleeve satin chrome finish ø18 mm
Delivered	Including box, key

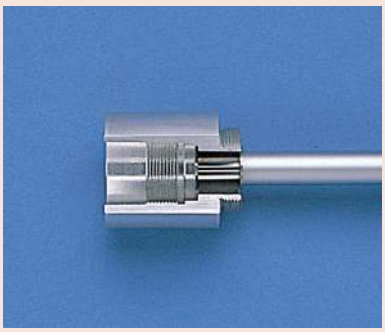

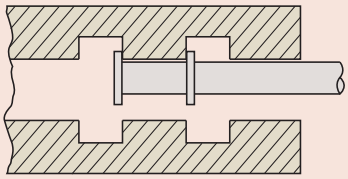

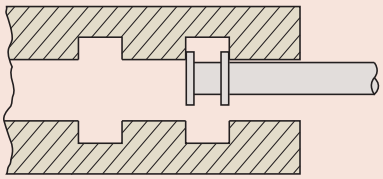

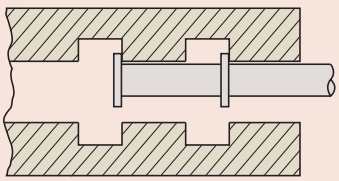

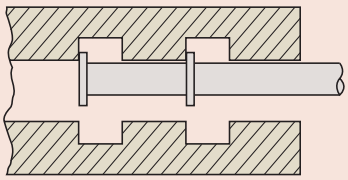

146-221

146-222

Metric

Non-rotating spindle type

No.	Range Outside	Range Inside	Graduation	Maximum Permissible Error J MPE	Parallelism	Measuring force [N]	Mass [g]	L [mm]	l [mm]
146-221	0-25 mm	1,6-26,5 mm	0,01 mm	±10 µm	10 µm	5-10	135	25	115
146-222	0-25 mm	1,6-26,5 mm	0,01 mm	±10 µm	10 µm	5-10	185	25	115
146-223	25-50 mm	26,5-51,5 mm	0,01 mm	±10 µm	10 µm	5-10	175	50	90
146-224	50-75 mm	51,5-76,5 mm	0,01 mm	±10 µm	10 µm	5-10	165	75	65
146-225	75-100 mm	76,5-101,5 mm	0,01 mm	±10 µm	10 µm	5-10	160	100	40

Unit: mm

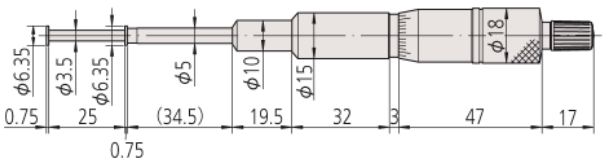

146-221

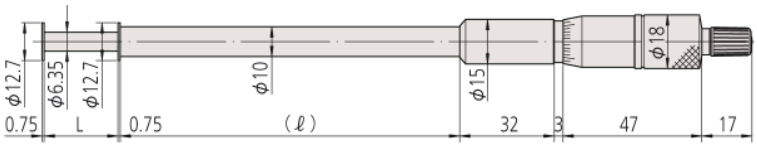

All products to be sold to commercial customers.
Product illustrations are without obligation. Product descriptions, in particular any and all technical specifications, are only binding when explicitly agreed upon.

Mitutoyo

Micrometer Setting Standards ≤ 1000 mm

Series 167

Used for adjusting the reference point of outside micrometers

167-103

167-108

Specifications

Measuring face	Micro-lap finish

Metric

No.	Length (L)	Diameter (D)	Accuracy	Flatness	Parallelism
167-101	25 mm	6,35 mm	±1,5 µm	0,3 µm	2 µm
167-102	50 mm	6,35 mm	±2 µm	0,3 µm	2 µm
167-103	75 mm	6,35 mm	±2,5 µm	0,3 µm	2 µm
167-104	100 mm	7,9 mm	±3 µm	0,3 µm	2 µm
167-105	125 mm	7,9 mm	±3,5 µm	0,3 µm	2 µm
167-106	150 mm	7,9 mm	±4 µm	0,3 µm	2 µm
167-107	175 mm	7,9 mm	±4,5 m	0,3 µm	2 µm
167-108	200 mm	7,9 mm	±5 µm	0,3 µm	2 µm
167-109	225 mm	7,9 mm	±5,5 µm	0,3 µm	2 µm
167-110	250 mm	7,9 mm	±6 µm	0,3 µm	2 µm
167-111	275 mm	7,9 mm	±6,5 µm	0,3 µm	2 µm
167-112	300 mm	7,9 mm	±7 µm	0,3 µm	2 µm
167-113	325 mm	7,9 mm	±7,5 µm	0,3 µm	2 µm
167-114	350 mm	7,9 mm	±8 µm	0,3 µm	2 µm
167-115	375 mm	7,9 mm	±8,5 µm	0,3 µm	2 µm
167-116	400 mm	7,9 mm	±9 µm	0,3 µm	2 µm
167-117	425 mm	7,9 mm	±9,5 µm	0,3 µm	2 µm
167-118	450 mm	7,9 mm	±10 µm	0,3 µm	2 µm
167-119	475 mm	7,9 mm	±10,5 µm	0,3 µm	2 µm
167-120	500 mm	11,9 mm	±11 µm	0,3 µm	2 µm
167-121	525 mm	11,9 mm	±11,5 µm	0,3 µm	2 µm
167-122	550 mm	11,9 mm	±12 µm	0,3 µm	2 µm
167-123	575 mm	11,9 mm	±12,5 µm	0,3 µm	2 µm
167-124	600 mm	11,9 mm	±13 µm	0,3 µm	2 µm
167-125	625 mm	11,9 mm	±13,5 µm	0,3 µm	2 µm
167-126	650 mm	11,9 mm	±14 µm	0,3 µm	2 µm
167-127	675 mm	11,9 mm	±14,5 µm	0,3 µm	2 µm
167-128	700 mm	11,9 mm	±15 µm	0,3 µm	2 µm
167-129	725 mm	11,9 mm	±15,5 µm	0,3 µm	2 µm
167-130	750 mm	11,9 mm	±16 µm	0,3 µm	2 µm
167-131	775 mm	11,9 mm	±16,5 µm	0,3 µm	2 µm
167-132	800 mm	11,9 mm	±17 µm	0,3 µm	2 µm
167-133	825 mm	11,9 mm	±17,5 µm	0,3 µm	2 µm
167-134	850 mm	11,9 mm	±18 µm	0,3 µm	2 µm
167-135	875 mm	11,9 mm	±18,5 µm	0,3 µm	2 µm
167-136	900 mm	11,9 mm	±19 µm	0,3 µm	2 µm
167-137	925 mm	11,9 mm	±19,5 µm	0,3 µm	2 µm
167-138	950 mm	11,9 mm	±20 µm	0,3 µm	2 µm
167-139	975 mm	11,9 mm	±20,5 µm	0,3 µm	2 µm
167-140	1000 mm	11,9 mm	±21 µm	0,3 µm	2 µm

Metric

Sets

No.	Length (L)	Flatness	Parallelism	Content of Set
167-902	25-125 mm	0,3 µm	2 µm	167-101 up to 167-105
167-903	25-275 mm	0,3 µm	2 µm	167-101 up to 167-111.

25 mm - 75 mm

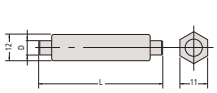

200 mm - 475 mm

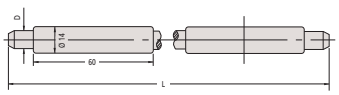

100 mm - 175 mm

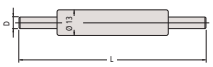

500 mm - 1000 mm

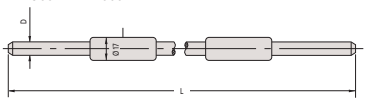

All products to be sold to commercial customers.
Product illustrations are without obligation. Product descriptions, in particular any and all technical specifications, are only binding when explicitly agreed upon.

Micrometer Setting Standards > 1000 mm

Specifications

Measuring face	Micro-lap finish

Series 167

Used for adjusting the reference point of outside micrometers

Metric

No.	Length (L)	Diameter (D)	Accuracy	Flatness	Parallelism
167-365	1025 mm	11,9 mm	±21,5 µm	0,3 µm	2 µm
167-366	1050 mm	11,9 mm	±22 µm	0,3 µm	2 µm
167-367	1075 mm	11,9 mm	±22,5 µm	0,3 µm	2 µm
167-368	1100 mm	11,9 mm	±23 µm	0,3 µm	2 µm
167-369	1125 mm	11,9 mm	±23,5 µm	0,3 µm	2 µm
167-370	1150 mm	11,9 mm	±24 µm	0,3 µm	2 µm
167-371	1175 mm	11,9 mm	±24,5 µm	0,3 µm	2 µm
167-372	1200 mm	11,9 mm	±25 µm	0,3 µm	2 µm
167-373	1225 mm	11,9 mm	±25,5 µm	0,3 µm	2 µm
167-374	1250 mm	11,9 mm	±26 µm	0,3 µm	2 µm
167-375	1275 mm	11,9 mm	±26,5 µm	0,3 µm	2 µm
167-376	1300 mm	11,9 mm	±27 µm	0,3 µm	2 µm
167-377	1325 mm	11,9 mm	±27,5 µm	0,3 µm	2 µm
167-378	1350 mm	11,9 mm	±28 µm	0,3 µm	2 µm
167-379	1375 mm	11,9 mm	±28,5 µm	0,3 µm	2 µm
167-380	1400 mm	11,9 mm	±29 µm	0,3 µm	2 µm
167-381	1425 mm	11,9 mm	±29,5 µm	0,3 µm	2 µm
167-382	1450 mm	11,9 mm	±30 µm	0,3 µm	2 µm
167-383	1475 mm	11,9 mm	±30,5 µm	0,3 µm	2 µm
167-384	1500 mm	11,9 mm	±31 µm	0,3 µm	2 µm
167-385	1525 mm	11,9 mm	±31,5 µm	0,3 µm	2 µm
167-386	1550 mm	11,9 mm	±32 µm	0,3 µm	2 µm
167-387	1575 mm	11,9 mm	±32,5 µm	0,3 µm	2 µm
167-388	1600 mm	11,9 mm	±33 µm	0,3 µm	2 µm
167-389	1625 mm	11,9 mm	±33,5 µm	0,3 µm	2 µm
167-390	1650 mm	11,9 mm	±34 µm	0,3 µm	2 µm
167-391	1675 mm	11,9 mm	±34,5 µm	0,3 µm	2 µm
167-392	1700 mm	11,9 mm	±35 µm	0,3 µm	2 µm
167-393	1725 mm	11,9 mm	±35,5 µm	0,3 µm	2 µm
167-394	1750 mm	11,9 mm	±36 µm	0,3 µm	2 µm
167-395	1775 mm	11,9 mm	±36,5 µm	0,3 µm	2 µm
167-396	1800 mm	11,9 mm	±37 µm	0,3 µm	2 µm
167-397	1825 mm	11,9 mm	±37,5 µm	0,3 µm	2 µm
167-398	1850 mm	11,9 mm	±38 µm	0,3 µm	2 µm
167-399	1875 mm	11,9 mm	±38,5 µm	0,3 µm	2 µm
167-400	1900 mm	11,9 mm	±39 µm	0,3 µm	2 µm
167-401	1925 mm	11,9 mm	±39,5 µm	0,3 µm	2 µm
167-402	1950 mm	11,9 mm	±40 µm	0,3 µm	2 µm
167-403	1975 mm	11,9 mm	±40,5 µm	0,3 µm	2 µm
167-404	2000 mm	11,9 mm	±41 µm	0,3 µm	2 µm

All products to be sold to commercial customers.
Product illustrations are without obligation. Product descriptions, in particular any and all technical specifications, are only binding when explicitly agreed upon.

Mitutoyo

Setting Standards for Screw Thread Micrometers

Setting Standards Metric (unified) 60°

Used for accurately setting screw thread micrometers at the start or end of the measuring range.

Metric

Angle 60°

No.	Length (L)	Accuracy
167-261	25 mm	±4 µm
167-262	50 mm	±5 µm
167-263	75 mm	±6 µm
167-264	100 mm	±7 µm
167-265	125 mm	±8 µm
167-266	150 mm	±9 µm
167-267	175 mm	±10 µm
167-268	200 mm	±11 µm
167-269	225 mm	±12 µm
167-270	250 mm	±13 µm
167-271	275 mm	±14 µm

Setting Standards Metric Whitworth 55°

Used for accurately setting screw thread micrometers at the start or end of the measuring range.

Metric

Angle 55°

No.	Length (L)	Accuracy
167-272	25 mm	±4 µm
167-273	50 mm	±5 µm
167-274	75 mm	±6 µm
167-275	100 mm	±7 µm
167-276	125 mm	±8 µm
167-277	150 mm	±9 µm
167-278	175 mm	±10 µm
167-279	200 mm	±11 µm
167-280	225 mm	±12 µm
167-281	250 mm	±13 µm
167-282	275 mm	±14 µm

Setting Standards for V-Anvil Micrometers

Series 167

Used for accurately setting V-anvil micrometers

167-329

Metric

No.	Length (L)	Accuracy
167-327	5 mm	±2 µm
167-328	10 mm	±2 µm
167-329	25 mm	±2 µm
167-330	40 mm	±3 µm
167-331	55 mm	±3 µm
167-332	70 mm	±3 µm
167-333	85 mm	±3 µm

All products to be sold to commercial customers.
Product illustrations are without obligation. Product descriptions, in particular any and all technical specifications, are only binding when explicitly agreed upon.

3-Wire Measuring Process

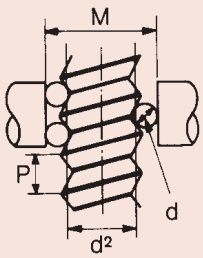

P =thread pitch
d_D =measuring wire Ø
d_2 =pitch diameter
M =theoretical dimension at measuring pressure d
a =pitch angle
d =correction factor

$$M = d_2 + \frac{d_D}{\sin\frac{a}{2}} - \frac{P}{2\tan\frac{a}{2}} + d_D + d$$

$$d = \frac{d_D}{2} \cdot \frac{P^2}{p^2} \cdot \frac{\cos\frac{a}{2} \cdot \cot\frac{a}{2}}{d_2^2}$$

o Nominal	Thread pitch P	Pitch o d2	Measuring wire o dD	Measurement over wire M	(M-d2)
M 1	0,25	0,838	0,170	1,133	0,295
M 1,2	0,25	1,038	0,170	1,332	0,294
M 1,4	0,30	1,205	0,170	1,456	0,251
M 1,7	0,35	1,473	0,220	1,831	0,358
M 2	0,40	1,740	0,250	2,145	0,405
M 2,3	0,40	2,040	0,250	2,444	0,404
M 2,6	0,45	2,308	0,290	2,789	0,481
M 3	0,50	2,675	0,290	3,113	0,438
M 3,5	0,60	3,110	0,335	3,596	0,486
M 4	0,70	3,545	0,455	4,305	0,760
M 5	0,80	4,480	0,455	5,153	0,673
M 6	1,00	5,350	0,620	6,346	0,996
M 8	1,25	7,188	0,725	8,282	1,094
M 10	1,50	9,026	0,895	10,414	1,388
M 12	1,75	10,863	1,100	12,650	1,787

o Nominal	Thread pitch P	Pitch o d2	Measuring wire o dD	Measurement over wire M	(M-d2)
M 14	2,00	12,701	1,350	15,021	2,320
M 16	2,00	14,701	1,350	17,021	2,320
M 20	2,50	18,376	1,650	21,163	2,787
M 22	2,50	20,376	1,650	23,163	2,787
M 24	3,00	22,051	2,050	25,606	3,555
M 27	3,00	25,051	2,050	28,605	3,554
M 30	3,50	27,727	2,050	30,848	3,121
M 33	3,50	30,727	2,050	33,848	3,121
M 36	4,00	33,402	2,550	37,591	4,189
M 39	4,00	36,402	2,550	40,590	4,188
M 42	4,50	39,077	2,550	42,832	3,755
M 45	4,50	42,077	2,550	45,832	3,755
M 48	5,00	44,752	3,200	50,025	5,273
M 52	5,00	48,752	3,200	54,024	5,272
M 56	5,50	52,428	3,200	57,267	4,839
M 60	5,50	56,428	3,200	61,267	4,839

Series 313

This three-wire measuring process is one of the most precise procedures for determining the pitch diameter of threads. It offers you the following benefits:

- The measuring wires are hardened and precision-lapped.
- They are placed onto the spindle and anvil of an outside micrometer, allowing you to measure the pitch diameter of threads.

313-101

1) Wire in set

No.	Accuracy	Content of Set	Remarks
313-101	DIN 2269, Grade 1	18 pairs of wires D= 0,17 - 3,2 mm	For micrometer spindle diameter 6,35 mm
313-102	DIN 2269, Grade 1	18 pairs of wires D= 0,17 - 3,2 mm	For micrometer spindle diameter 8 mm

Individual wires (content of 313-101)
One pair, support spindle ø 6.35 mm

No.	Diameter (D)	Accuracy
952131	0,17 mm	DIN 2269, Grade 1
952132	0,195 mm	DIN 2269, Grade 1
952133	0,22 mm	DIN 2269, Grade 1
952134	0,25 mm	DIN 2269, Grade 1
952135	0,29 mm	DIN 2269, Grade 1
952136	0,335 mm	DIN 2269, Grade 1
952137	0,39 mm	DIN 2269, Grade 1
952138	0,445 mm	DIN 2269, Grade 1
952139	0,53 mm	DIN 2269, Grade 1
952140	0,62 mm	DIN 2269, Grade 1
952141	0,725 mm	DIN 2269, Grade 1
952142	0,895 mm	DIN 2269, Grade 1
952143	1,1 mm	DIN 2269, Grade 1
952144	1,35 mm	DIN 2269, Grade 1
952145	1,65 mm	DIN 2269, Grade 1
952146	2,05 mm	DIN 2269, Grade 1
952147	2,55 mm	DIN 2269, Grade 1
952148	3,2 mm	DIN 2269, Grade 1

Individual wires (content of 313-102)
One pair, support spindle ø 8 mm

No.	Diameter (D)	Accuracy
952149	0,17 mm	DIN 2269, Grade 1
952150	0,195 mm	DIN 2269, Grade 1
952151	0,22 mm	DIN 2269, Grade 1
952152	0,25 mm	DIN 2269, Grade 1
952153	0,29 mm	DIN 2269, Grade 1
952154	0,335 mm	DIN 2269, Grade 1
952155	0,39 mm	DIN 2269, Grade 1
952156	0,445 mm	DIN 2269, Grade 1
952157	0,53 mm	DIN 2269, Grade 1
952158	0,62 mm	DIN 2269, Grade 1
952159	0,725 mm	DIN 2269, Grade 1
952160	0,895 mm	DIN 2269, Grade 1
952161	1,1 mm	DIN 2269, Grade 1
952162	1,35 mm	DIN 2269, Grade 1
952163	1,65 mm	DIN 2269, Grade 1
952164	2,05 mm	DIN 2269, Grade 1
952165	2,55 mm	DIN 2269, Grade 1
952166	3,2 mm	DIN 2269, Grade 1

All products to be sold to commercial customers.
Product illustrations are without obligation. Product descriptions, in particular any and all technical specifications, are only binding when explicitly agreed upon.

Mitutoyo

Micrometer Stands

Series 156

This is a micrometer stand that offers you the following benefits:

- Keeps both hands free for operating the micrometer and positioning the workpiece.
- Designed for batch or mass production measurements in manufacturing and quality assurance.

156-105-10

156-101-10

156-102

No.	Applicable measuring range	Remarks	Mass [g]
156-105-10	0 - 50 mm	Fixed angle type 45°	700
156-101-10	0 - 100 mm	Adjustable angle type	1210
156-102	100 - 300 mm	Vertical type	9000
156-103	300 - 1000 mm	Vertical type	8500

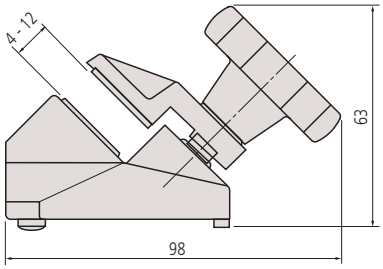

156-105-10

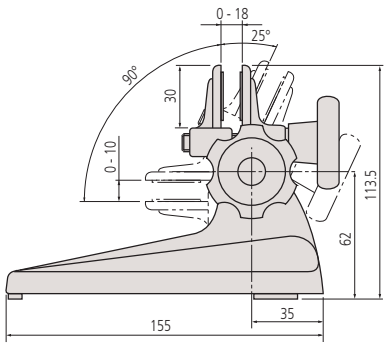

156-101-10

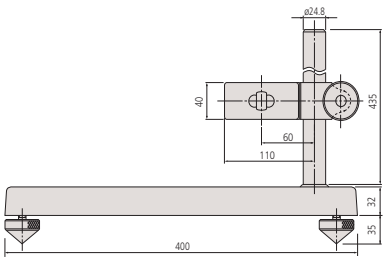

156-102

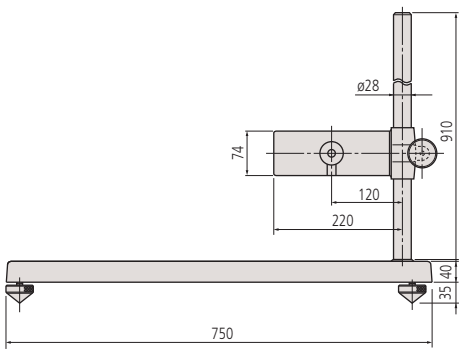

156-103

All products to be sold to commercial customers.
Product illustrations are without obligation. Product descriptions, in particular any and all technical specifications, are only binding when explicitly agreed upon.

Colour Coded Ratchets and Speeders

Micrometer accessories

Colour-coded ratchets

Colour-coded speeders for Ratchet Thimble Micrometer series 102-7XX, QuantuMike and Series 293 with ratched thimble

Colour-coded ratchets for analogue micrometer 0-300 mm

No.	Colour
985056	Black
985061	Red
985081	Blue
985071	Yellow
985076	Green
985066	Brown
04GZA239	Grey

Colour-coded ratchets for analogue micrometer 300-1000 mm

No.	Colour
04GZA243	Grey

Colour-coded speeders for digital micrometer 0-300 mm

No.	Colour
04GZA241	Grey

Colour-coded speeders for series 102-7XX, QuantuMike and series 293 with ratched thimble

No.	Colour
04AAB208	Grey
04GAA900	Red
04GAA901	Yellow
04GAA902	Green
04GAA903	Blue
04GAA899	Black

Ball Attachments

Micrometer accessories

- Ball attachment to fit micrometer anvils (ø 6,35 mm only)

101468M

Sample application

Metric

No.	Diameter (D)
101468M	5 mm

All products to be sold to commercial customers.
Product illustrations are without obligation. Product descriptions, in particular any and all technical specifications, are only binding when explicitly agreed upon.

Optical Parallels

Series 157

These Optical Parallels allow you to inspect micrometers and other measuring tools. Using optical interference, they can inspect the measuring faces for parallelism and flatness.

157-903

Metric

No.	Diameter (D)	Flatness	Parallelism	Content of Set	Remarks
157-903	30 mm	0,1 µm	0,2 µm	157-101 (12 mm), 157-102 (12,12 mm), 157-103 (12,25 mm), 157-104 (12,37 mm)	For micrometer range 0 - 25 mm
157-904	30 mm	0,1 µm	0,2 µm	157-105 (25 mm), 157-106 (25,12 mm), 157-107 (25,25 mm), 157-108 (25,37 mm)	For micrometer range 25 - 50 mm

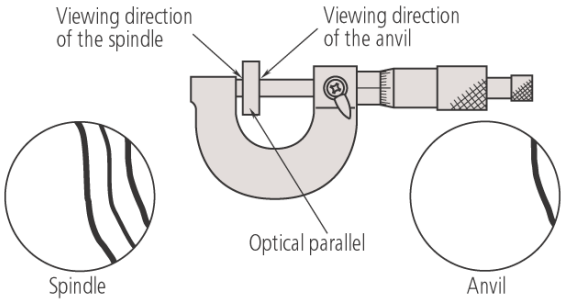

Testing a micrometer for flatness and parallelism of anvil and spindle faces : flatness is indicated by straightness and regular spacing of interference fringes, and parallelism by how many fringes are visible.

All products to be sold to commercial customers.
Product illustrations are without obligation. Product descriptions, in particular any and all technical specifications, are only binding when explicitly agreed upon.

Optical Flats

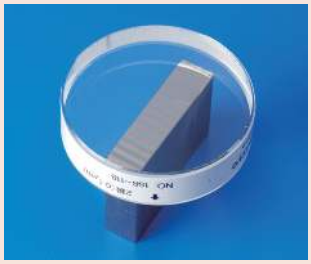

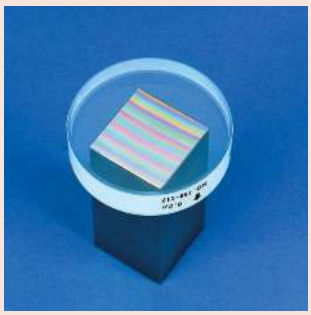

Series 158

These optical flats are an essential tool to test the flatness of reflective surfaces such as gauge blocks through optical interference technology.

158-118

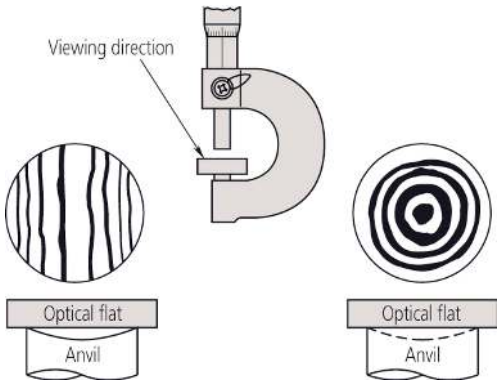

Metric

No.	Length (L)	Diameter (D)	Flatness
158-117	12 mm	45 mm	0,2 µm
158-118	12 mm	45 mm	0,1 µm
158-119	15 mm	60 mm	0,2 µm
158-120	15 mm	60 mm	0,1 µm

All products to be sold to commercial customers.
Product illustrations are without obligation. Product descriptions, in particular any and all technical specifications, are only binding when explicitly agreed upon.

Mitutoyo

Digital Micrometer Heads with Non-Rotating Spindle

Series 164

This is a digital micrometer head with non-rotating spindle. It offers you the following benefits:
- Rotatable display, carbide tipped and non-rotating spindle
- It is perfect for integration into machinery and measuring instruments.

164-163

Metric

No.	Range [mm]	Digital step	Maximum Permissible Error J MPE	Spindle end	Spindle pitch	Stem Ø	Stem	Remarks	Mass [g]
164-163	0 - 50	0,001 mm	±3 µm	Flat	0,5 mm	18 mm	Flat	Non-rotating spindle	490

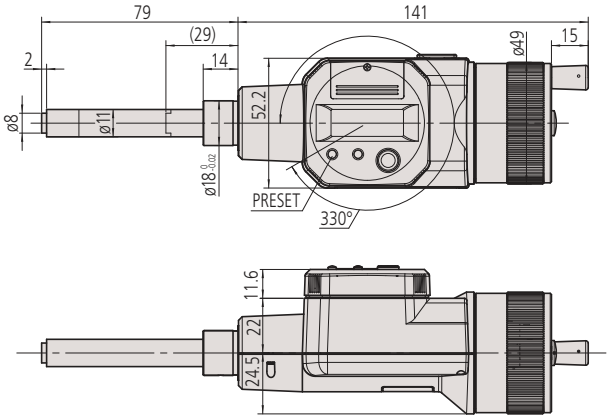

164-163
( ): with spindle full retracted

Functions	Series 164
ABS / INC (INC ZERO)	●
Auto Power OFF after 20 min. non use	●
2 x PRESET	●
Counting direction switchable	●

Specifications

Display	LCD, character height 7,5 mm
Measuring face	Carbide-tipped
Power supply	2 batteries SR-44
Battery life	Approx. 1,8 years

Optional accessories

No.	Description
959149	Digimatic Cable, Straight, Data Button,, 1m
959150	Digimatic Cable, Straight, Data Button,, 2m
06AFM380C	USB Input Tool Direct (Digimatic USB), Digi/Digi2, Straight, with Data Button
02AZD880G	U-WAVE-T, Buzzer Type, Wireless Transmitter
02AZD730G	U-WAVE-T, IP67 Type, Wireless Transmitter
02AZD790C	U-WAVE-T Connection Cable C, Straight, with Data Button

Consumable spares

No.	Description
938882	Battery SR44 1.5V

All products to be sold to commercial customers.
Product illustrations are without obligation. Product descriptions, in particular any and all technical specifications, are only binding when explicitly agreed upon.

Digital Micrometer Heads with 10 mm Stem

Functions	Series 350
ABS / INC (INC ZERO)	■
Auto Power OFF after 20 min. non use	■
Function lock	■
HOLD	■
2 x PRESET	■

Specifications

Display	LCD, character height 7,5 mm
Measuring face	Carbide-tipped
Measuring spindle	With spindle lock, ø 6,35 mm
Scale	Thimble and sleeve satin chrome finish
Power supply	1 battery SR-44
Battery life	Approx. 2,4 years

Optional accessories

No.	Description
05CZA662	Digimatic Cable with Data Button IP Type, 1m, Micrometer Type
05CZA663	Digimatic Cable with Data Button IP Type, 2m, Micrometer Type
06AFM380B	USB Input Tool Direct (Digimatic USB), Digi/Digi2, With Data Button IP Micrometer Type
264-622	U-WAVE fit, IP67 Type, Wireless Transmitter for Micrometer
264-623	U-WAVE fit, Buzzer Type, Wireless Transmitter for Micrometer
264-627	U-WAVE fit Bluetooth, Buzzer Type, Wireless Transmitter for Micrometer
264-626	U-WAVE fit Bluetooth, IP67 Type, Wireless Transmitter for Micrometer
02AZF310	Connection Unit, U-WAVE fit, Waterproof Type

Consumable spares

No.	Description
938882	Battery SR44 1.5V

Series 350

This Micrometer Head has a 25 mm range and a 10 mm stem, and offers the following benefits:

- You can integrate it into machinery and measuring instruments.
- Measurement values are clearly displayed in 0,001mm increments.
- Stem diameter: 10 mm.

350-251-30

Metric

No.	Range [mm]	Digital step	Maximum Permissible Error J MPE	Spindle end	Spindle pitch	Stem Ø	Stem	Fixture thickness for clamp nut [mm]	Mass [g]
350-251-30	0 - 25	0,001 mm	±2 µm	Flat	0,5 mm	10 mm	Plain		230
350-252-30	0 - 25	0,001 mm	±2 µm	Flat	0,5 mm	10 mm	w/ clamp nut	11,5	230
350-253-30	0 - 25	0,001 mm	±2 µm	Spherical (SR4)	0,5 mm	10 mm	Plain		230
350-254-30	0 - 25	0,001 mm	±2 µm	Spherical (SR4)	0,5 mm	10 mm	w/ clamp nut	11,5	230

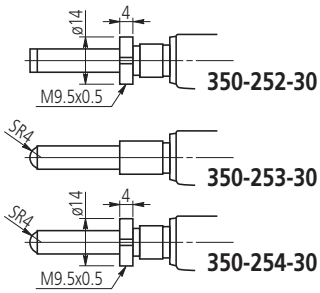

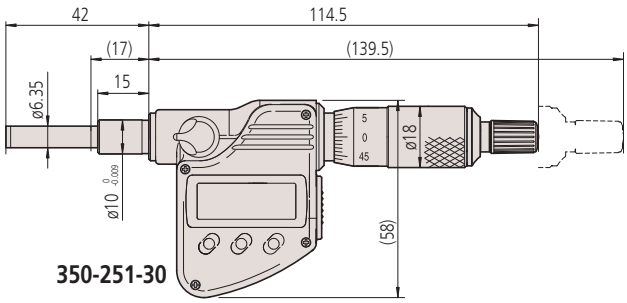

( ): with spindle full retracted

All products to be sold to commercial customers.
Product illustrations are without obligation. Product descriptions, in particular any and all technical specifications, are only binding when explicitly agreed upon.

Mitutoyo

Digital Micrometer Heads with 12 mm Stem

Series 350

This Micrometer Head has a 25 mm range and a 12 mm stem, and offers the following benefits:

- You can integrate it into machinery and measuring instruments.
- Its excellent water and dust resistance (IP65 protection level) lets you use it in machining situations that include splashing coolant fluid (except types with threaded stem).
- Measurement values are clearly displayed in 0,001 mm increments.

350-281-30

Metric

No.	Range [mm]	Digital step	Maximum Permissible Error J MPE	Spindle end	Spindle pitch	Stem Ø	Stem	Fixture thickness for clamp nut [mm]	Remarks	Mass [g]
350-271-30	0 - 25	0,001 mm	±2 µm	Flat	0,5 mm	12 mm	Plain		IP65	230
350-272-30	0 - 25	0,001 mm	±2 µm	Flat	0,5 mm	12 mm	w/ clamp nut	11,5	Threaded stem	230
350-273-30	0 - 25	0,001 mm	±2 µm	Spherical (SR4)	0,5 mm	12 mm	Plain		IP65	230
350-274-30	0 - 25	0,001 mm	±2 µm	Spherical (SR4)	0,5 mm	12 mm	w/ clamp nut	11,5	Threaded stem	230
350-281-30	0 - 25	0,001 mm	±2 µm	Flat	0,5 mm	12 mm	Plain		IP65	230
350-282-30	0 - 25	0,001 mm	±2 µm	Flat	0,5 mm	12 mm	w/ clamp nut	11,5	IP65	230
350-283-30	0 - 25	0,001 mm	±2 µm	Spherical (SR4)	0,5 mm	12 mm	Plain		IP65	230
350-284-30	0 - 25	0,001 mm	±2 µm	Spherical (SR4)	0,5 mm	12 mm	w/ clamp nut	11,5	IP65	230
350-261-30	0 - 25	0,001 mm	±2 µm	Flat	0,5 mm	12 mm	Plain		IP65, w/ non-rotating measuring face w/o ratched stop	235

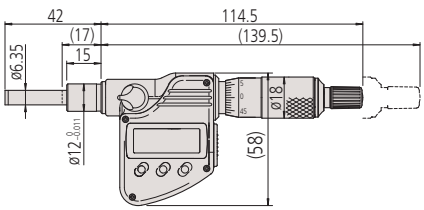

350-281-30 ( ) with spindle full retracted

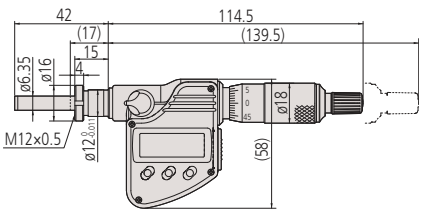

350-282-30

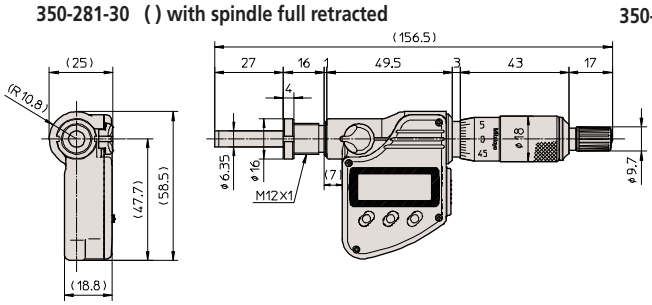

350-272-30

Functions	Series 350
ABS / INC (INC ZERO)	●
Auto Power OFF after 20 min. non use	●
Function lock	●
HOLD	●
2 x PRESET	●

Specifications

Display	LCD, character height 7,5 mm
Measuring face	Carbide-tipped
Measuring spindle	With spindle lock, ø 6,35 mm
Scale	Thimble and sleeve satin chrome finish
Power supply	1 battery SR-44
Battery life	Approx. 2,4 years

Optional accessories

No.	Description
05CZA662	Digimatic Cable with Data Button IP Type, 1m, Micrometer Type
05CZA663	Digimatic Cable with Data Button IP Type, 2m, Micrometer Type
06AFM380B	USB Input Tool Direct (Digimatic USB), Digi/Digi2, With Data Button IP Micrometer Type
264-622	U-WAVE fit, IP67 Type, Wireless Transmitter for Micrometer
264-623	U-WAVE fit, Buzzer Type, Wireless Transmitter for Micrometer
264-626	U-WAVE fit Bluetooth, IP67 Type, Wireless Transmitter for Micrometer
264-627	U-WAVE fit Bluetooth, Buzzer Type, Wireless Transmitter for Micrometer
02AZF310	Connection Unit, U-WAVE fit, Waterproof Type

Consumable spares

No.	Description
938882	Battery SR44 1.5V
305307	Bush, Series 350, Ø 12/18 mm, 14 mm length
306625	Bush, Series 350, Ø 12/18 mm, 16 mm length

306625 Standard for 350-271-30, 350-273-30
305307 Standard for 350-261-30

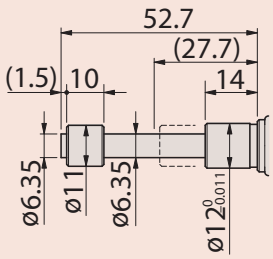

350-261-30

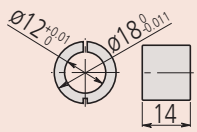

305307

All products to be sold to commercial customers.
Product illustrations are without obligation. Product descriptions, in particular any and all technical specifications, are only binding when explicitly agreed upon.

Micrometer Heads with Counter

Specifications

Measuring spindle	With spindle lock, ø 6,35 mm, spindle pitch 0,5 mm
Measuring face	Carbide-tipped
Scale	• Thimble and sleeve satin chrome finish • White anodized aluminium

Series 250 - Digit counter type

This Digit counter type is a micrometer head with a mechanical counter.

250-301

Metric

No.	Range [mm]	Graduation	Maximum Permissible Error J MPE	Spindle end	Spindle pitch	Stem Ø	Stem	Mass [g]
250-301	0 - 25	0,01 mm	±2 µm	Flat	0,5 mm	10 mm	Plain	165

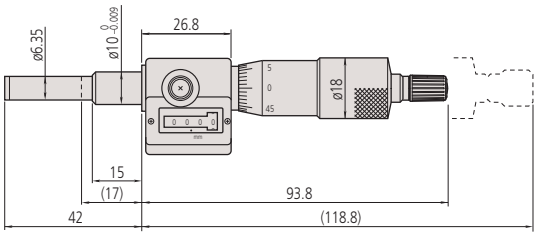

250-301

Micro Jack

Specifications

Measuring face	Hardened steel (>60 HRC)

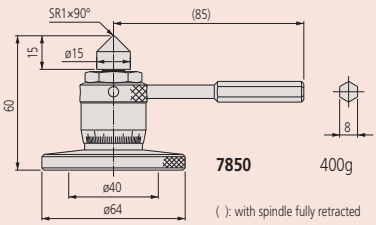

7850 400g

( ): with spindle fully retracted

7850

Series 7

This Micro Jack allows you to make easy adjustments under a heavy load.
It offers the following benefits:

- Adjustments can easily be made under a heavy load.
- You can use it to accurately level machines, surface plates, and other precision instruments.

7850

Metric

No.	Graduation	Range [mm]	Remarks
7850	0,01 mm	60 - 75	Max. load : 400kg

All products to be sold to commercial customers.
Product illustrations are without obligation. Product descriptions, in particular any and all technical specifications, are only binding when explicitly agreed upon.

Mitutoyo

Fine Spindle Feed 0,1 mm / rev Micrometer Heads 5 mm and 6,5 mm Range

Series 148 - Very fine spindle feed of 0,1/rev

These micrometer heads have a very fine spindle feed of 0,1 mm/rev.
They offer the following benefits:

- Small size micrometer heads with extremely fine pitch of 0,1 mm.
- Ideal for fine adjustment applications in scientific apparatus.

148-143

148-243

Metric

No.	Range [mm]	Graduation	Maximum Permissible Error J MPE	Spindle end	Spindle pitch	Stem Ø	Stem	Fixture thickness for clamp nut [mm]	Mass [g]
148-244	0 - 5	0,004 mm	±5 µm	Spherical (SR1,5)	0,1 mm	3,5 mm	Plain		4
148-245	0 - 5	0,004 mm	±5 µm	Spherical (SR1,5)	0,1 mm	3,5 mm	w/ clamp nut	3	5
148-142	0 - 6.5	0,002 mm	±2 µm	Spherical (SR4)	0,1 mm	9,5 mm	Plain		31
148-143	0 - 6.5	0,002 mm	±2 µm	Spherical (SR4)	0,1 mm	9,5 mm	w/ clamp nut	6	34
148-342	0 - 6.5	0,002 mm	±2 µm	Spherical (SR4)	0,1 mm	9,5 mm	Plain		29
148-343	0 - 6.5	0,002 mm	±2 µm	Spherical (SR4)	0,1 mm	9,5 mm	w/ clamp nut	6	31
148-242	0 - 6.5	0,002 mm	±5 µm	Spherical (SR3)	0,1 mm	6 mm	Plain		10
148-243	0 - 6.5	0,002 mm	±5 µm	Spherical (SR3)	0,1 mm	6 mm	w/ clamp nut	4	10

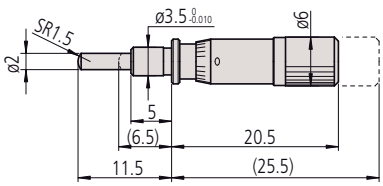

148-244

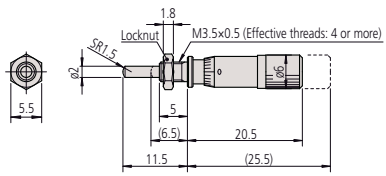

148-245

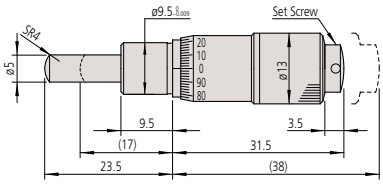

148-142

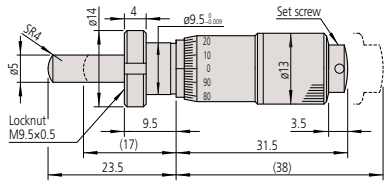

148-143

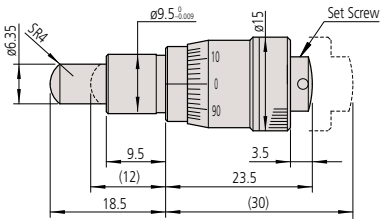

148-342

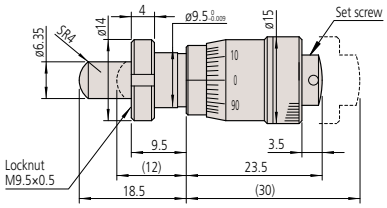

148-343

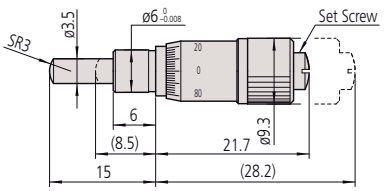

148-242

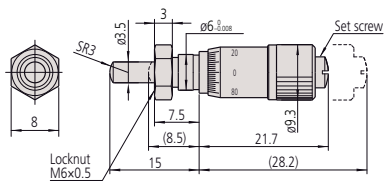

148-243

( ): with spindle full retracted

Specifications

Measuring face	Hardened steel (>60 HRC)

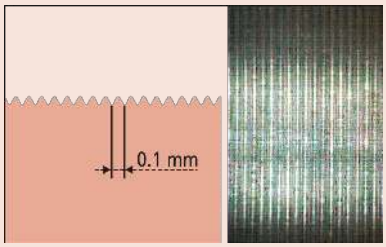

Pitch 0,1 mm

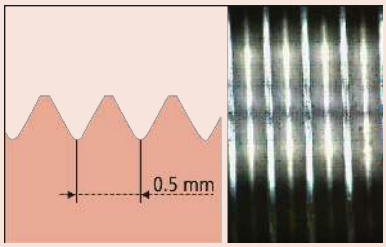

Pitch 0,5 mm

All products to be sold to commercial customers.
Product illustrations are without obligation. Product descriptions, in particular any and all technical specifications, are only binding when explicitly agreed upon.

Ultra Small Micrometer Heads 5 mm and 6,5 mm Range

Specifications

Measuring face	Hardened steel (>60 HRC)

Series 148 - Ultra small

This ultra-small micrometer head allows you to easily incorporate it into machines and offers you the following benefits:

- Plain stem and a flat spindle end
- Hardened steel measuring surface

148-201

148-215

Metric

No.	Range [mm]	Gradua-tion	Maximum Permissi-ble Error J MPE	Spindle end	Spindle pitch	Stem Ø	Stem	Fixture thickness for clamp nut [mm]	Special features	Mass [g]
148-215	0 - 5	0,02 mm	±5 µm	Spherical (SR1,5)	0,5 mm	3,5 mm	Plain		-	4
148-216	0 - 5	0,02 mm	±5 µm	Spherical (SR1,5)	0,5 mm	3,5 mm	w/ clamp nut	3	-	4
148-201	0 - 6.5	0,01 mm	±5 µm	Flat	0,5 mm	6 mm	Plain		-	10
148-203	0 - 6.5	0,01 mm	±5 µm	Flat	0,5 mm	6 mm	w/ clamp nut	4	-	10
148-205	0 - 6.5	0,01 mm	±5 µm	Spherical (SR3)	0,5 mm	6 mm	Plain		-	10
148-207	0 - 6.5	0,01 mm	±5 µm	Spherical (SR3)	0,5 mm	6 mm	w/ clamp nut	4	-	10
148-209	0 - 6.5	0,01 mm	±5 µm	Flat	0,5 mm	6 mm	Plain		Reverse reading	10
148-211	0 - 6.5	0,01 mm	±5 µm	Flat	0,5 mm	6 mm	w/ clamp nut	4	Reverse reading	10

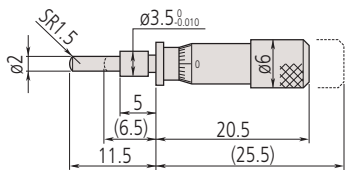

148-215

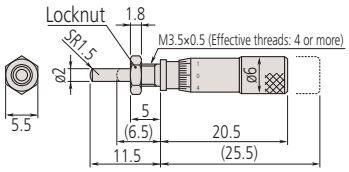

148-216

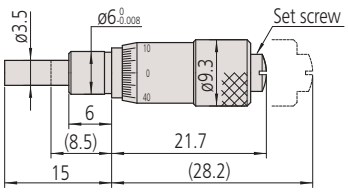

148-201

(): with spindle full retracted

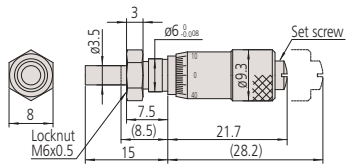

148-203

All products to be sold to commercial customers.
Product illustrations are without obligation. Product descriptions, in particular any and all technical specifications, are only binding when explicitly agreed upon.

Mitutoyo

Fine Spindle Feed 0,25 mm / rev Micrometer Heads 6,5 mm and 13 mm Range

Series 148 - Fine spindle feed of 0,25/rev

These micrometer heads are a standard, small-sized type with a 6,5 mm and 13 mm measuring range.
They offer the following benefits:

- Fine spindle feed of 0,25 mm/rev for fine adjustment.

148-132

Specifications

Measuring face	Hardened steel (>60 HRC)

Metric

No.	Range [mm]	Graduation	Maximum Permissible Error J MPE	Spindle end	Spindle pitch	Stem Ø	Stem	Fixture thickness for clamp nut [mm]	Mass [g]
148-132	0 - 13	0,01 mm	±2 µm	Spherical (SR4)	0,25 mm	9,5 mm	Plain		30
148-133	0 - 13	0,01 mm	±2 µm	Spherical (SR4)	0,25 mm	9,5 mm	w/ clamp nut	6	35
148-322	0 - 6.5	0,01 mm	±2 µm	Spherical (SR4)	0,25 mm	9,5 mm	Plain		30
148-323	0 - 6.5	0,01 mm	±2 µm	Spherical (SR4)	0,25 mm	9,5 mm	w/ clamp nut	6	35

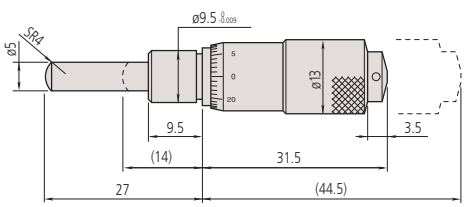

148-132 mm

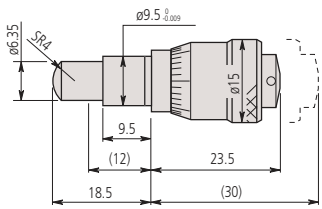

148-322 mm

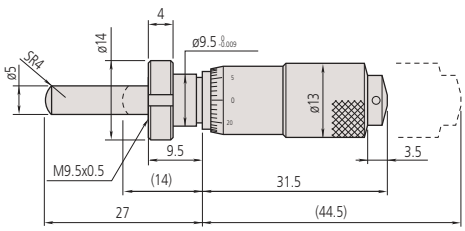

148-133 mm

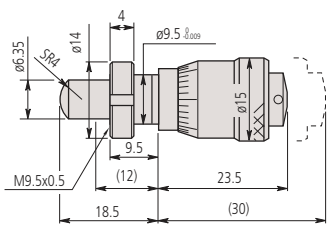

148-323 mm

( ): with spindle full retracted

All products to be sold to commercial customers.
Product illustrations are without obligation. Product descriptions, in particular any and all technical specifications, are only binding when explicitly agreed upon.

Micrometer Head 6,5 mm and 13 mm Short Thimble Type

Specifications

Measuring face	Hardened steel (>60 HRC)

148-301

148-303

148-305

148-313

148-314

Series 148 - Compact Type for Limited Space Applications

Short thimble type with thimble diameter options.

Metric

No.	Range [mm]	Graduation	Maximum Permissible Error J MPE	Spindle end	Spindle pitch	Stem Ø	Stem	Thimble Ø	Fixture thickness for clamp nut [mm]	Mass [g]
148-301	0 - 6.5	0,01 mm	±2 µm	Flat	0,5 mm	9,5 mm	Plain	15 mm		26
148-302	0 - 6.5	0,01 mm	±2 µm	Flat	0,5 mm	9,5 mm	w/ clamp nut	15 mm	6	26
148-303	0 - 6.5	0,01 mm	±2 µm	Flat	0,5 mm	9,5 mm	Plain	20 mm		39
148-304	0 - 6.5	0,01 mm	±2 µm	Flat	0,5 mm	9,5 mm	w/ clamp nut	20 mm	6	39
148-305	0 - 6.5	0,01 mm	±2 µm	Flat	0,5 mm	9,5 mm	Plain	29 mm		71
148-306	0 - 6.5	0,01 mm	±2 µm	Flat	0,5 mm	9,5 mm	w/ clamp nut	29 mm	6	71
148-313	0 - 6.5	0,01 mm	±2 µm	Spherical (SR4)	0,5 mm	9,5 mm	Plain	15 mm		26
148-314	0 - 6.5	0,01 mm	±2 µm	Spherical (SR4)	0,5 mm	9,5 mm	w/ clamp nut	15 mm	6	26
148-307	0 - 13	0,01 mm	±2 µm	Flat	0,5 mm	9,5 mm	Plain	15 mm		35
148-308	0 - 13	0,01 mm	±2 µm	Flat	0,5 mm	9,5 mm	w/ clamp nut	15 mm	6	35
148-309	0 - 13	0,01 mm	±2 µm	Flat	0,5 mm	9,5 mm	Plain	20 mm		55
148-310	0 - 13	0,01 mm	±2 µm	Flat	0,5 mm	9,5 mm	w/ clamp nut	20 mm	6	55
148-311	0 - 13	0,01 mm	±2 µm	Flat	0,5 mm	9,5 mm	Plain	29 mm		103
148-312	0 - 13	0,01 mm	±2 µm	Flat	0,5 mm	9,5 mm	w/ clamp nut	29 mm	6	103

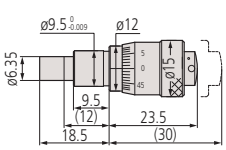

148-301

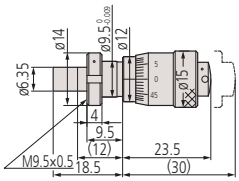

148-302

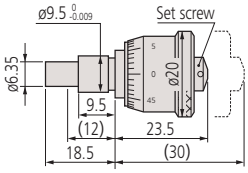

148-303

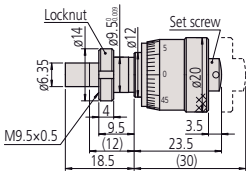

148-304

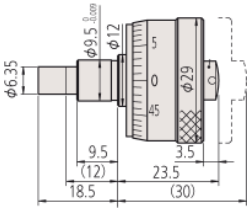

148-305

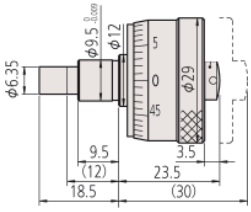

148-306

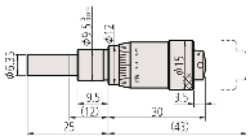

148-307

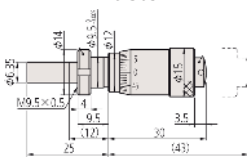

148-308

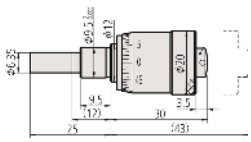

148-309

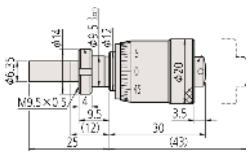

148-310

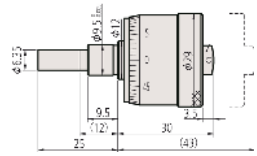

148-311

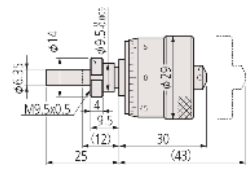

148-312

( ): with spindle full retracted

All products to be sold to commercial customers.
Product illustrations are without obligation. Product descriptions, in particular any and all technical specifications, are only binding when explicitly agreed upon.

Mitutoyo

Micrometer Heads 6,5 mm Range with Spindle Lock

Series 148 - Locking screw Type

These micrometer heads feature a knurled locking screw so you can lock the spindle in any position with the knurled locking screw.

148-223

148-319

148-220

148-316

Specifications

Measuring face	Hardened steel (>60 HRC)

Metric

No.	Range [mm]	Graduation	Maximum Permissible Error J MPE	Spindle end	Spindle pitch	Stem Ø	Stem	Fixture thickness for clamp nut [mm]	Mass [g]
148-220	0 - 6.5	0,01 mm	±5 µm	Flat	0,5 mm	6 mm	Plain		16
148-221	0 - 6.5	0,01 mm	±5 µm	Flat	0,5 mm	6 mm	w/ clamp nut	4	17
148-222	0 - 6.5	0,01 mm	±5 µm	Spherical (SR3)	0,5 mm	6 mm	Plain		16
148-223	0 - 6.5	0,01 mm	±5 µm	Spherical (SR3)	0,5 mm	6 mm	w/ clamp nut	4	17
148-316	0 - 6.5	0,01 mm	±2 µm	Flat	0,5 mm	9,5 mm	Plain		40
148-317	0 - 6.5	0,01 mm	±2 µm	Flat	0,5 mm	9,5 mm	w/ clamp nut	6	43
148-318	0 - 6.5	0,01 mm	±2 µm	Spherical (SR4)	0,5 mm	9,5 mm	Plain		40
148-319	0 - 6.5	0,01 mm	±2 µm	Spherical (SR4)	0,5 mm	9,5 mm	w/ clamp nut	6	43

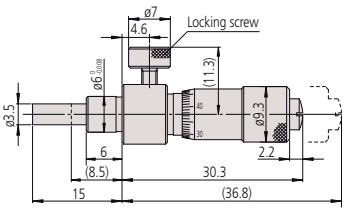

148-220

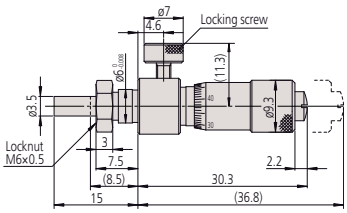

148-221

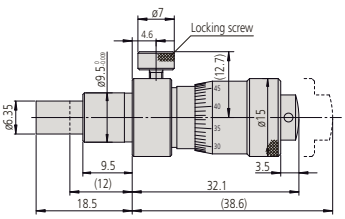

148-316

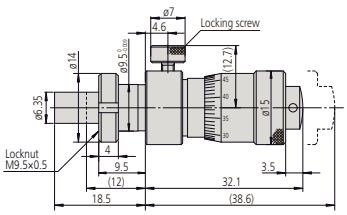

148-317

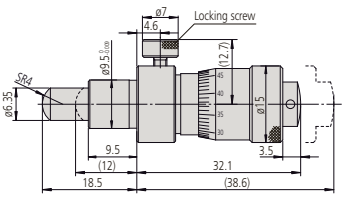

148-318

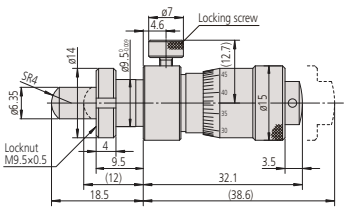

148-319

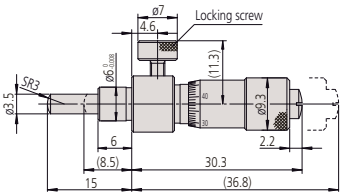

148-222

( ): with spindle full retracted

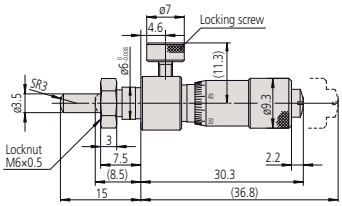

148-223

All products to be sold to commercial customers.
Product illustrations are without obligation. Product descriptions, in particular any and all technical specifications, are only binding when explicitly agreed upon.

Micrometer Heads 13 mm Range with Spindle Lock

Specifications

Measuring face	Hardened steel (>60 HRC)

Series 148 - Locking screw Type

These micrometer heads feature a locking screw so you can lock the spindle in any position with the knurled locking screw.

148-150

148-153

Metric

No.	Range [mm]	Graduation	Maximum Permissible Error J MPE	Spindle end	Spindle pitch	Stem Ø	Stem	Fixture thickness for clamp nut [mm]	Mass [g]
148-150	0 - 13	0,01 mm	±2 µm	Flat	0,5 mm	9,5 mm	Plain		40
148-151	0 - 13	0,01 mm	±2 µm	Flat	0,5 mm	9,5 mm	w/ clamp nut	6	43
148-152	0 - 13	0,01 mm	±2 µm	Spherical (SR4)	0,5 mm	9,5 mm	Plain		40
148-153	0 - 13	0,01 mm	±2 µm	Spherical (SR4)	0,5 mm	9,5 mm	w/ clamp nut	6	43

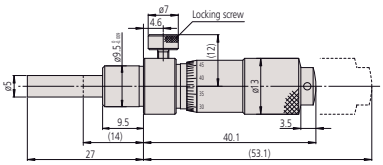

148-150

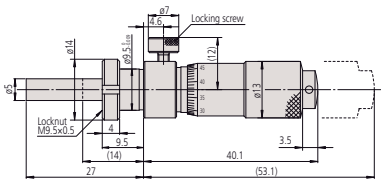

148-151

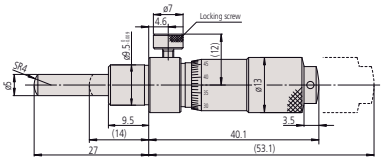

148-152

( ): with spindle full retracted

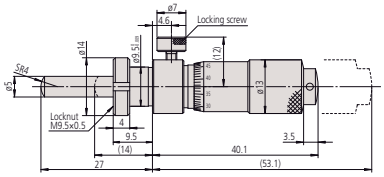

148-153

All products to be sold to commercial customers.
Product illustrations are without obligation. Product descriptions, in particular any and all technical specifications, are only binding when explicitly agreed upon.

Mitutoyo

Micrometer Heads 13 mm Range with Zero Thimble

Series 148 - Standard type, small size with zero-adjustable thimble.

These are a standard type of small size micrometer heads with a zero-adjustable thimble.
They offer the following benefits:

- You can make a zero-setting at any position by loosening the setscrew in the thimble.

148-503

148-504

Metric

No.	Range [mm]	Graduation	Maximum Permissible Error J MPE	Spindle end	Spindle pitch	Stem Ø	Stem	Fixture thickness for clamp nut [mm]	Special features	Mass [g]
148-503	0 - 13	0,01 mm	±2 µm	Flat	0,5 mm	9,5 mm	Plain		-	35
148-513	0 - 13	0,01 mm	±2 µm	Flat	0,5 mm	9,5 mm	Plain		Stainless steel	35
148-508	0 - 13	0,01 mm	±2 µm	Flat	0,5 mm	9,5 mm	w/ clamp nut	6	-	40
148-853	0 - 13	0,01 mm	±2 µm	Spherical (SR4)	0,5 mm	9,5 mm	Plain		-	40
148-858	0 - 13	0,01 mm	±2 µm	Spherical (SR4)	0,5 mm	9,5 mm	w/ clamp nut	6	-	40

Metric — Reverse reading

No.	Range [mm]	Graduation	Maximum Permissible Error J MPE	Spindle end	Spindle pitch	Stem Ø	Stem	Fixture thickness for clamp nut [mm]	Special features	Mass [g]
148-863	0 - 13	0,01 mm	±2 µm	Flat	0,5 mm	9,5 mm	Plain		Reverse reading	35
148-868	0 - 13	0,01 mm	±2 µm	Flat	0,5 mm	9,5 mm	w/ clamp nut	6	Reverse reading	40

Metric — Reverse reading / with spindle lock

No.	Range [mm]	Graduation	Maximum Permissible Error J MPE	Spindle end	Spindle pitch	Stem Ø	Stem	Fixture thickness for clamp nut [mm]	Special features	Mass [g]
148-864	0 - 13	0,01 mm	±2 µm	Flat	0,5 mm	9,5 mm	w/ clamp nut	6	Reverse reading	40
148-866	0 - 13	0,01 mm	±2 µm	Flat	0,5 mm	9,5 mm	Plain		Reverse reading	35

Metric — With spindle lock

No.	Range [mm]	Graduation	Maximum Permissible Error J MPE	Spindle end	Spindle pitch	Stem Ø	Stem	Fixture thickness for clamp nut [mm]	Mass [g]
148-506	0 - 13	0,01 mm	±2 µm	Flat	0,5 mm	9,5 mm	Plain		35
148-504	0 - 13	0,01 mm	±2 µm	Flat	0,5 mm	9,5 mm	w/ clamp nut	6	40
148-854	0 - 13	0,01 mm	±2 µm	Spherical (SR4)	0,5 mm	9,5 mm	w/ clamp nut	6	40
148-856	0 - 13	0,01 mm	±2 µm	Spherical (SR4)	0,5 mm	9,5 mm	Plain		35

Specifications

Measuring face	Hardened steel (>60 HRC)

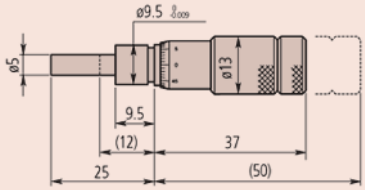

148-503

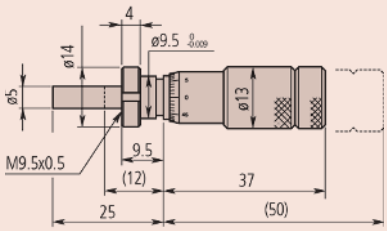

148-508

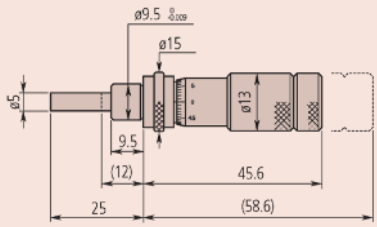

148-506

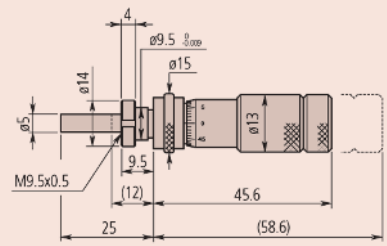

148-504

( ): with spindle full retracted

All products to be sold to commercial customers.
Product illustrations are without obligation. Product descriptions, in particular any and all technical specifications, are only binding when explicitly agreed upon.

Micrometer Heads 13 mm Range Small Standard Type

Specifications

Measuring face	Hardened steel (>60 HRC)

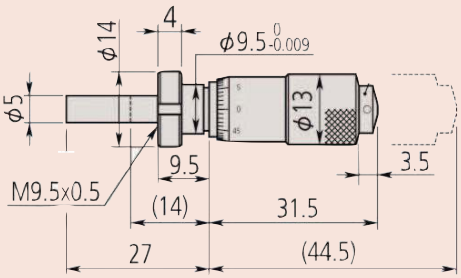

148-103

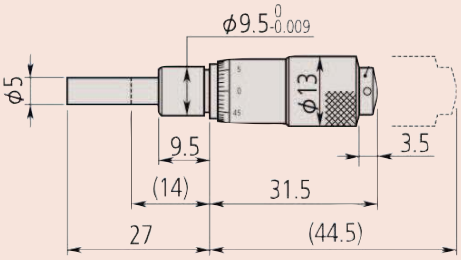

148-104

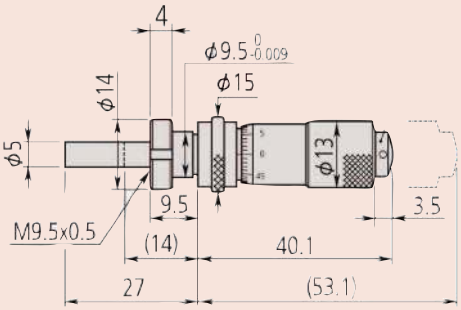

148-120

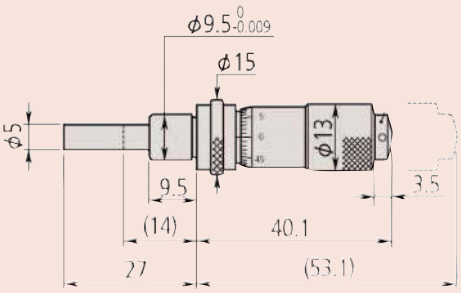

148-121

( ) with spindle full retracted

Series 148 - Small standard type

This is a standard, small-sized micrometer head which offers you the following benefits:

- Plain stem and a flat or spherical spindle end
- Hardened steel measuring surface

148-104

148-103

148-121

148-120

Metric

No.	Range [mm]	Gradua-tion	Maximum Permissible Error J MPE	Spindle end	Spindle pitch	Stem Ø	Stem	Fixture thickness for clamp nut [mm]	Special features	Mass [g]
148-104	0 - 13	0,01 mm	±2 µm	Flat	0,5 mm	9,5 mm	Plain		-	30
148-103	0 - 13	0,01 mm	±2 µm	Flat	0,5 mm	9,5 mm	w/ clamp nut	6	-	35
148-801	0 - 13	0,01 mm	±2 µm	Spherical (SR4)	0,5 mm	9,5 mm	Plain		-	30
148-802	0 - 13	0,01 mm	±2 µm	Spherical (SR4)	0,5 mm	9,5 mm	w/ clamp nut	6	-	35
148-821	0 - 13	0,01 mm	±2 µm	Flat	0,5 mm	9,5 mm	Plain		Reverse reading	30
148-822	0 - 13	0,01 mm	±2 µm	Flat	0,5 mm	9,5 mm	w/ clamp nut	6	Reverse reading	35

Metric

With spindle lock

No.	Range [mm]	Gradua-tion	Maximum Permissible Error J MPE	Spindle end	Spindle pitch	Stem Ø	Stem	Fixture thickness for clamp nut [mm]	Special features	Mass [g]
148-121	0 - 13	0,01 mm	±2 µm	Flat	0,5 mm	9,5 mm	Plain		-	40
148-120	0 - 13	0,01 mm	±2 µm	Flat	0,5 mm	9,5 mm	w/ clamp nut	6	-	45
148-803	0 - 13	0,01 mm	±2 µm	Spherical (SR4)	0,5 mm	9,5 mm	Plain		-	40
148-804	0 - 13	0,01 mm	±2 µm	Spherical (SR4)	0,5 mm	9,5 mm	w/ clamp nut	6	-	45
148-823	0 - 13	0,01 mm	±2 µm	Flat	0,5 mm	9,5 mm	Plain		Reverse reading	40
148-824	0 - 13	0,01 mm	±2 µm	Flat	0,5 mm	9,5 mm	w/ clamp nut	6	Reverse reading	45

All products to be sold to commercial customers.
Product illustrations are without obligation. Product descriptions, in particular any and all technical specifications, are only binding when explicitly agreed upon.

Mitutoyo

Micrometer Heads 15 mm Range

Series 149 - Small standard type with carbide-tipped spindle

This small micrometer head with tungsten carbide measuring surface offers you the following benefits:

- Stem with clamp nut and a flat or spherical spindle end
- Stem with carbide-tipped spindle

149-132

149-184

Metric

No.	Range [mm]	Graduation	Maximum Permissible Error J MPE	Spindle end	Spindle pitch	Stem Ø	Stem	Fixture thickness for clamp nut [mm]	Special features	Mass [g]
149-132	0 - 15	0,01mm	±2 µm	Flat	0,5 mm	9,5 mm	Plain		-	55
149-131	0 - 15	0,01mm	±2 µm	Flat	0,5 mm	9,5 mm	w/ clamp nut	11,5	-	60
149-801	0 - 15	0,01mm	±2 µm	Spherical (SR4)	0,5 mm	9,5 mm	Plain		-	55
149-802	0 - 15	0,01mm	±2 µm	Spherical (SR4)	0,5 mm	9,5 mm	w/ clamp nut	11,5	-	60
149-821	0 - 15	0,01mm	±2 µm	Flat	0,5 mm	9,5 mm	Plain		Reverse reading	55
149-822	0 - 15	0,01mm	±2 µm	Flat	0,5 mm	9,5 mm	w/ clamp nut	11,5	Reverse reading	60

Metric

With spindle lock

No.	Range [mm]	Graduation	Maximum Permissible Error J MPE	Spindle end	Spindle pitch	Stem Ø	Stem	Fixture thickness for clamp nut [mm]	Special features	Mass [g]
149-183	0 - 15	0,01mm	±2 µm	Flat	0,5 mm	9,5 mm	Plain		-	55
149-184	0 - 15	0,01mm	±2 µm	Flat	0,5 mm	9,5 mm	w/ clamp nut	6	-	60
149-803	0 - 15	0,01mm	±2 µm	Spherical (SR4)	0,5 mm	9,5 mm	Plain		-	55
149-804	0 - 15	0,01mm	±2 µm	Spherical (SR4)	0,5 mm	9,5 mm	w/ clamp nut	6	-	60
149-823	0 - 15	0,01mm	±2 µm	Flat	0,5 mm	9,5 mm	Plain		Reverse reading	55
149-824	0 - 15	0,01mm	±2 µm	Flat	0,5 mm	9,5 mm	w/ clamp nut	6	Reverse reading	60

Specifications

Measuring face	Carbide-tipped

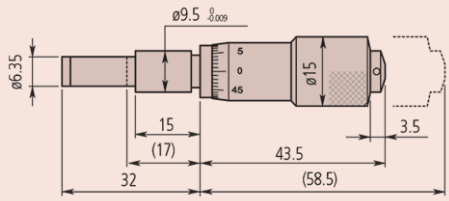

149-132

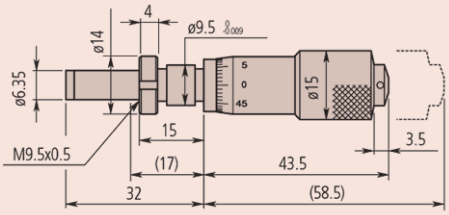

149-131

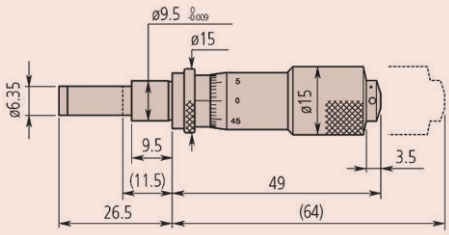

149-183

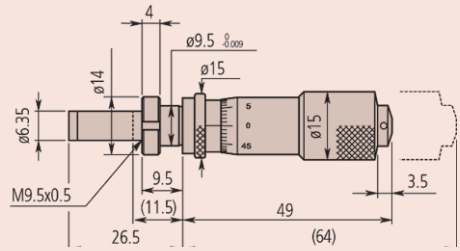

149-184

( ): with spindle full retracted

All products to be sold to commercial customers.
Product illustrations are without obligation. Product descriptions, in particular any and all technical specifications, are only binding when explicitly agreed upon.

Micrometer Heads 25 mm Range

Specifications

Measuring face	Carbide-tipped

150-801

150-191

150-195

150-196

Series 150 - Medium-sized standard type

This is a standard, medium-size micrometer head that offers you the following benefits:

- Plain stem and a flat or spherical spindle end
- With carbide-tipped spindle

Metric

No.	Range [mm]	Graduation	Maximum Permissible Error J MPE	Spindle end	Spindle pitch	Stem Ø	Stem	Fixture thickness for clamp nut [mm]	Special features	Mass [g]
150-192	0 - 25	0,01 mm	±2 µm	Flat	0,5 mm	10 mm	Plain		-	95
150-191	0 - 25	0,01 mm	±2 µm	Flat	0,5 mm	10 mm	w/ clamp nut	11,5	-	100
150-801	0 - 25	0,01 mm	±2 µm	Spherical (SR4)	0,5 mm	10 mm	Plain		-	95
150-802	0 - 25	0,01 mm	±2 µm	Spherical (SR4)	0,5 mm	10 mm	w/ clamp nut	11,5	-	100
150-821	0 - 25	0,01 mm	±2 µm	Flat	0,5 mm	10 mm	Plain		Reverse reading	95
150-822	0 - 25	0,01 mm	±2 µm	Flat	0,5 mm	10 mm	w/ clamp nut	11,5	Reverse reading	100
150-190	0 - 25	0,001 mm	±2 µm	Flat	0,5 mm	10 mm	Plain		Graduation 0,001 mm	95
150-189	0 - 25	0,001 mm	±2 µm	Flat	0,5 mm	10 mm	w/ clamp nut	11,5	Graduation 0,001 mm	100
150-196	0 - 25	0,01 mm	±2 µm	Flat	0,5 mm	10 mm	Plain		w/o ratchet stop	90
150-195	0 - 25	0,01 mm	±2 µm	Flat	0,5 mm	10 mm	w/ clamp nut	11,5	w/o ratchet stop	90

Metric With spindle lock

No.	Range [mm]	Graduation	Maximum Permissible Error J MPE	Spindle end	Spindle pitch	Stem Ø	Stem	Fixture thickness for clamp nut [mm]	Special features	Mass [g]
150-209	0 - 25	0,01 mm	±2 µm	Flat	0,5 mm	10 mm	Plain		-	110
150-210	0 - 25	0,01 mm	±2 µm	Flat	0,5 mm	10 mm	w/ clamp nut	11,5	-	115
150-183	0 - 25	0,001 mm	±2 µm	Flat	0,5 mm	10 mm	Plain		Graduation 0,001 mm	110
150-184	0 - 25	0,001 mm	±2 µm	Flat	0,5 mm	10 mm	w/ clamp nut	11,5	Graduation 0,001 mm	115
150-211	0 - 25	0,01 mm	±2 µm	Flat	0,5 mm	10 mm	Plain		w/o ratchet stop	115
150-212	0 - 25	0,01 mm	±2 µm	Flat	0,5 mm	10 mm	w/ clamp nut	11,5	w/o ratchet stop	115
150-803	0 - 25	0,01 mm	±2 µm	Spherical (SR4)	0,5 mm	10 mm	Plain		-	125
150-804	0 - 25	0,01 mm	±2 µm	Spherical (SR4)	0,5 mm	10 mm	w/ clamp nut	11,5	-	125
150-823	0 - 25	0,01 mm	±2 µm	Flat	0,5 mm	10 mm	Plain		Reverse reading	125
150-824	0 - 25	0,01 mm	±2 µm	Flat	0,5 mm	10 mm	w/ clamp nut	11,5	Reverse reading	125

All products to be sold to commercial customers.
Product illustrations are without obligation. Product descriptions, in particular any and all technical specifications, are only binding when explicitly agreed upon.

Mitutoyo

Micrometer Heads 25 mm Range

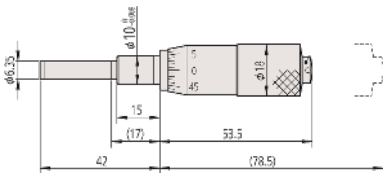

150-196

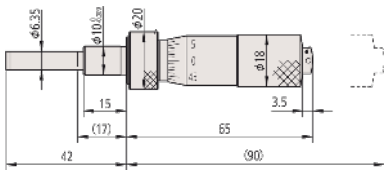

150-211

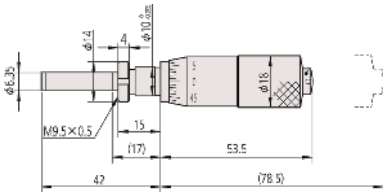

150-195

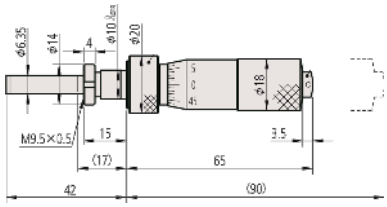

150-212

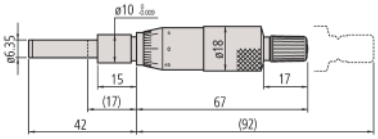

150-192

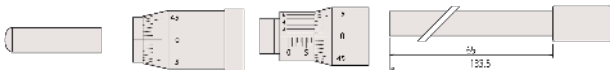

150-801 150-821 150-190 150-219

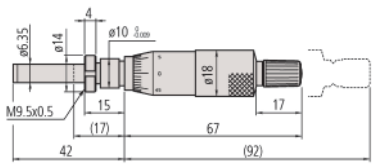

150-191

150-802 150-822 150-189 150-220

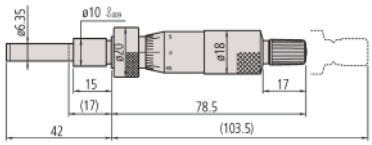

150-209

150-803 150-823 150-183 150-223

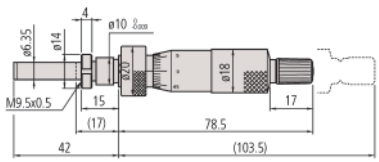

150-210

( ): with spindle full retracted

150-804 150-824 150-184 150-224

All products to be sold to commercial customers.
Product illustrations are without obligation. Product descriptions, in particular any and all technical specifications, are only binding when explicitly agreed upon.

Micrometer Heads 25 mm and 50 mm Range with 8 mm Spindle Diameter

Series 151 - Medium-sized standard type with 8 diameter spindle.

These micrometer heads are a medium-sized, standard type.
They offer the following benefits:

- 8 mm diameter spindle
- Extremely sturdy micrometer head with or without a ratchet.

151-224

151-223

151-255

151-256

Specifications

Measuring face	Carbide-tipped

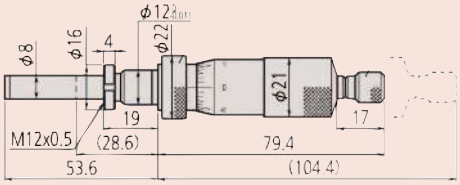

151-213

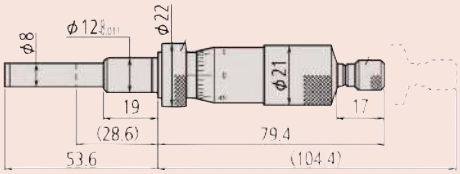

151-214

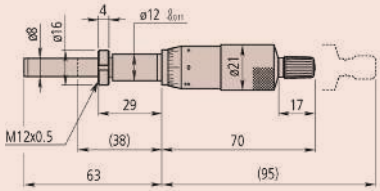

151-223

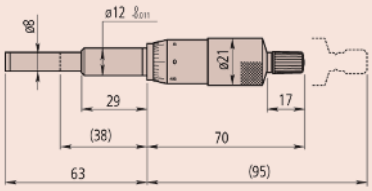

151-224

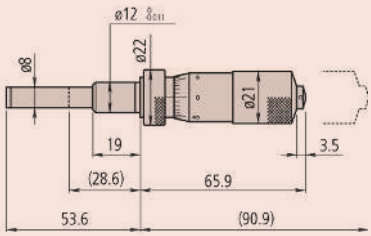

151-225

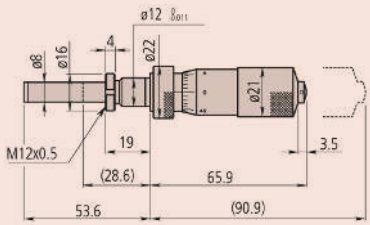

151-226

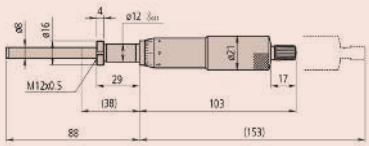

151-255

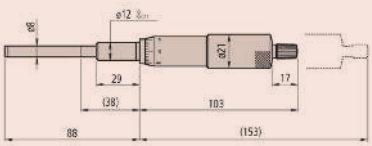

151-256

( ): with spindle full retracted

Metric

No.	Range [mm]	Graduation	Maximum Permissible Error J MPE	Spindle end	Spindle pitch	Stem Ø	Stem	Fixture thickness for clamp nut [mm]	Special features	Mass [g]
151-224	0 - 25	0,01 mm	±2 µm	Flat	0,5 mm	12 mm	Plain		-	150
151-223	0 - 25	0,01 mm	±2 µm	Flat	0,5 mm	12 mm	w/ clamp nut	25,5	-	155
151-222	0 - 25	0,001 mm	±2 µm	Flat	0,5 mm	12 mm	Plain		Graduation 0,001 mm	150
151-221	0 - 25	0,001 mm	±2 µm	Flat	0,5 mm	12 mm	w/ clamp nut	25,5	Graduation 0,001 mm	155
151-227	0 - 25	0,01 mm	±2 µm	Flat	0,5 mm	12 mm	Plain		w/o ratchet stop	150
151-228	0 - 25	0,01 mm	±2 µm	Flat	0,5 mm	12 mm	w/ clamp nut	25,5	w/o ratchet stop	155
151-256	0 - 50	0,01 mm	±4 µm	Flat	0,5 mm	12 mm	Plain		-	240
151-255	0 - 50	0,01 mm	±4 µm	Flat	0,5 mm	12 mm	w/ clamp nut	25,5	-	250
151-260	0 - 50	0,01 mm	±4 µm	Flat	0,5 mm	12 mm	Plain		w/o ratchet stop	240
151-259	0 - 50	0,01 mm	±4 µm	Flat	0,5 mm	12 mm	w/ clamp nut	25,5	w/o ratchet stop	250

Metric With spindle lock

No.	Range [mm]	Graduation	Maximum Permissible Error J MPE	Spindle end	Spindle pitch	Stem Ø	Stem	Fixture thickness for clamp nut [mm]	Special features	Mass [g]
151-214	0 - 25	0,01 mm	±2 µm	Flat	0,5 mm	12 mm	Plain		-	160
151-213	0 - 25	0,01 mm	±2 µm	Flat	0,5 mm	12 mm	w/ clamp nut	15,5	-	165
151-212	0 - 25	0,001 mm	±2 µm	Flat	0,5 mm	12 mm	Plain		Graduation 0,001 mm	160
151-211	0 - 25	0,001 mm	±2 µm	Flat	0,5 mm	12 mm	w/ clamp nut	15,5	Graduation 0,001 mm	165
151-225	0 - 25	0,01 mm	±2 µm	Flat	0,5 mm	12 mm	Plain		w/o ratchet stop	165
151-226	0 - 25	0,01 mm	±2 µm	Flat	0,5 mm	12 mm	w/ clamp nut	15,5	w/o ratchet stop	165

All products to be sold to commercial customers.
Product illustrations are without obligation. Product descriptions, in particular any and all technical specifications, are only binding when explicitly agreed upon.

Mitutoyo

Micrometer Heads with Large Thimble

Series 152 - Large thimble type for fine adjustment

These micrometer heads come with a large thimble, allowing you to make fine adjustments. They offer the following benefits:

- The large scale drum allows fine graduation and very easy rotation.

152-283

152-348

Specifications

Measuring face	Carbide-tipped

Metric

No.	Range [mm]	Graduation	Maximum Permissible Error J MPE	Spindle end	Spindle pitch	Stem Ø	Stem	Fixture thickness for clamp nut [mm]	Mass [g]
152-283	0 - 10	0,002 mm	±2 µm	Flat	0,5 mm	12 mm	w/ clamp nut	22,5	190
152-332	0 - 25	0,002 mm	±2 µm	Flat	0,5 mm	12 mm	Plain		310

Metric

Black and red scaling in both directions

No.	Range [mm]	Graduation	Maximum Permissible Error J MPE	Spindle end	Spindle pitch	Stem Ø	Stem	Special features	Mass [g]
152-348	0 - 25	0,002 mm	±2 µm	Flat	0,5 mm	12 mm	Plain	Bidirectional graduation	310
152-380	0 - 50	0,002 mm	±4 µm	Flat	0,5 mm	12 mm	Plain	Bidirectional graduation	460

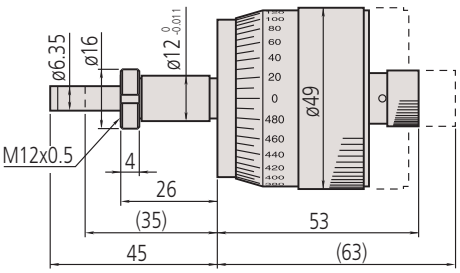

152-283

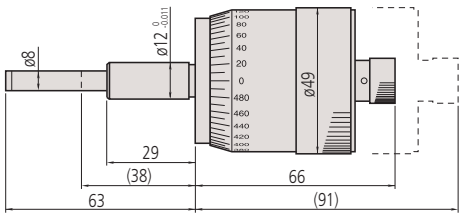

152-332

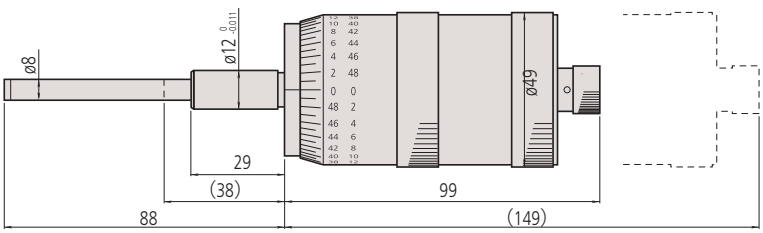

152-380

( ): with spindle full retracted

All products to be sold to commercial customers.
Product illustrations are without obligation. Product descriptions, in particular any and all technical specifications, are only binding when explicitly agreed upon.

Micrometer Heads for XY-Stage

Specifications

Measuring face	Hardened steel (>60 HRC) 152-390, 152-389, 152-392, 152-391 carbide tipped 152-402, 152-401

152-402, 152-401

The zero point setting ring allows spindle travel without changing the scale drum position, thus simplifying zero point setting.

Series 152 - XY Stage type

These XY Stage type micrometer heads let you read measurement values easily.
They offer the following benefits:

- Micrometer heads especially designed for accurate cross-travel stage translation in X and Y axes.
- Spindle end: Flat form and hardened, or spherical with carbide tip (more than HRA90), lapped surface.

152-390

152-402

Metric

No.	Range [mm]	Graduation	Maximum Permissible Error J MPE	Spindle end	Spindle pitch	Stem Ø	Stem	Special features	Mass [g]
152-402	0 - 25	0,001 mm	±2 µm	Spherical (SR10)	1 mm	18 mm	Plain	For X-axis	460
152-390	0 - 25	0,005 mm	±2 µm	Flat with non-rotating device	1 mm	18 mm	Plain	For X-axis Bidirectional grad.	270
152-389	0 - 25	0,005 mm	±2 µm	Flat with non-rotating device	1 mm	18 mm	Plain	For Y-axis Bidirectional grad.	270

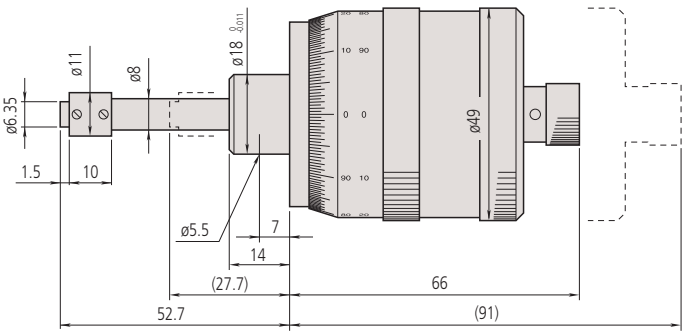

152-390

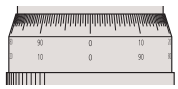

152-389

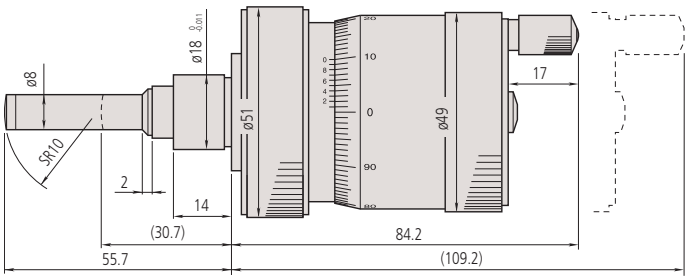

152-402
(): with spindle full retracted

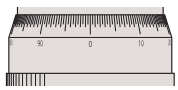

152-401

All products to be sold to commercial customers.
Product illustrations are without obligation. Product descriptions, in particular any and all technical specifications, are only binding when explicitly agreed upon.

Mitutoyo

Quick Spindle Feed Micrometer Heads

Series 152 - Quick spindle feed of 1/rev

This is a quick spindle micrometer head.
It offers you the following benefits:

- Micrometer head with 1 mm / rotation

152-102

152-103

Specifications

Measuring face	Carbide-tipped

Metric

No.	Range [mm]	Graduation	Maximum Permissible Error J MPE	Spindle end	Spindle pitch	Stem Ø	Stem	Mass [g]
152-101	0 - 15	0,01 mm	±2 µm	Flat	1 mm	12 mm	Plain	205
152-102	0 - 25	0,01 mm	±2 µm	Flat	1 mm	12 mm	Plain	230
152-103	0 - 50	0,01 mm	±4 µm	Flat	1 mm	12 mm	Plain	355

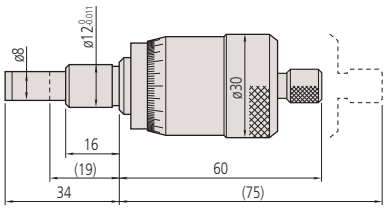

152-101

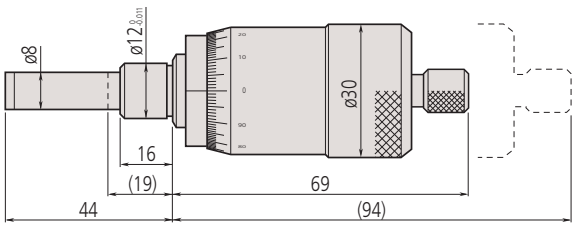

152-102

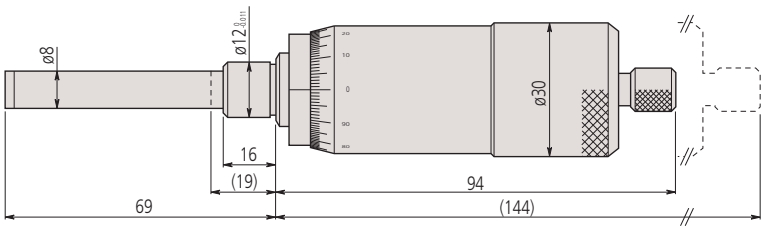

152-103

( ): with spindle full retracted

All products to be sold to commercial customers.
Product illustrations are without obligation. Product descriptions, in particular any and all technical specifications, are only binding when explicitly agreed upon.

Micrometer Heads with Non-Rotating Spindle

Specifications

Measuring face	Carbide-tipped

Version with non-rotating spindle

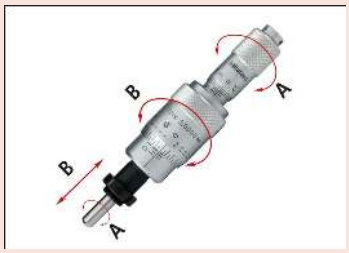

Version with rotating spindle
110-502

Series 110 - Differential screw translator (Extra-fine feed) type

This is a differential screw translator (extra-fine feed) type of micrometer head.
It offers you the following benefits:

- Micrometer head with ultra-fine rate of travel.
- With its non-rotating spindle it is particularly suited to fine adjustments.
- The differential travel mechanism with double spindle enables ultra-sensitive travel

110-102

110-502

Metric

No.	Range [mm]	Graduation	Maximum Permissible Error J MPE	Spindle end	Stem Ø	Stem	Fixture thickness for clamp nut [mm]	Special features	Mass [g]
110-105	0 - 1	0,001 mm	±3 µm / ±1,5 µm	Flat	12 mm	w/ clamp nut	9,5		150
110-106	0 - 1	0,0001 mm	±3 µm / ±1,5 µm	Flat	12 mm	w/ clamp nut	9,5		150
110-107	0 - 1	0,001 mm	±3 µm / ±1,5 µm	Spherical (SR10)	12 mm	w/ clamp nut	9,5		150
110-108	0 - 1	0,0001 mm	±3 µm / ±1,5 µm	Spherical (SR10)	12 mm	w/ clamp nut	9,5		150
110-101	0 - 2,5	0,001 mm	±5 µm / ±1,5 µm	Flat	12 mm	w/ clamp nut	9,5		150
110-102	0 - 2,5	0,0001 mm	±5 µm / ±1,5 µm	Flat	12 mm	w/ clamp nut	9,5		150
110-502	0 - 13	A: 0,01 mm / B: 0,0005 mm	±3 µm / ±1,5 µm	Spherical (SR3)	9,5 mm	w/ clamp nut	11,5	Range A: 0-13 mm, Range B: 0-0,2 mm	100

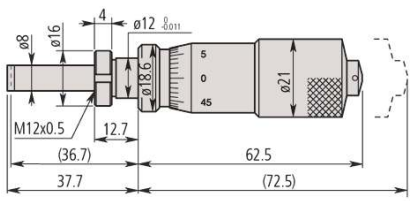

110-105
110-106

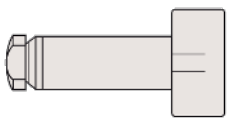

110-107
110-108

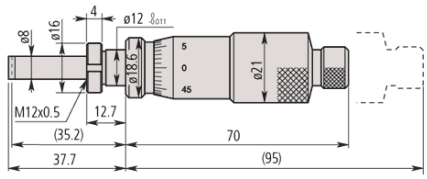

110-101
110-102

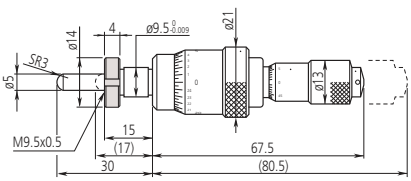

110-502

(): with spindle full retracted

All products to be sold to commercial customers.
Product illustrations are without obligation. Product descriptions, in particular any and all technical specifications, are only binding when explicitly agreed upon.

Mitutoyo

Micrometer Heads with Non-Rotating Spindle

Series 153

- Micrometer Head featuring a non-rotating spindle for delicate workpieces
- Design suits applications where the twisting effect of the standard spindle is undesirable because of the risk of damage

153-101

153-203

153-201

Specifications

Measuring face	Carbide-tipped

Version with non-rotating spindle

Metric

No.	Range [mm]	Graduation	Maximum Permissible Error J MPE	Spindle end	Spindle pitch	Stem Ø	Stem	Special features	Mass [g]
153-101	0 - 15	0,01 mm	±3 µm	Flat	0,5 mm	9,5 mm	Plain		70
153-203	0 - 25	0,01 mm	±3 µm	Flat	0,5 mm	12 mm	Plain		125
153-204	0 - 25	0,001 mm	±3 µm	Flat	0,5 mm	12 mm	Plain	Graduation with vernier	125

Metric

With ratchet stop

No.	Range [mm]	Graduation	Maximum Permissible Error J MPE	Spindle end	Spindle pitch	Stem Ø	Stem	Special features	Mass [g]
153-201	0 - 25	0,01 mm	±3 µm	Flat	0,5 mm	12 mm	Plain		125
153-202	0 - 25	0,001 mm	±3 µm	Flat	0,5 mm	12 mm	Plain	Graduation with vernier	125

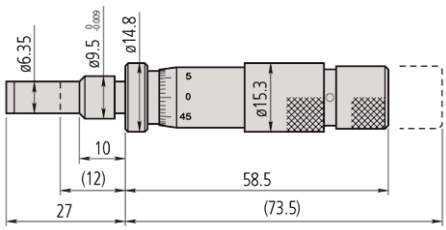

153-101

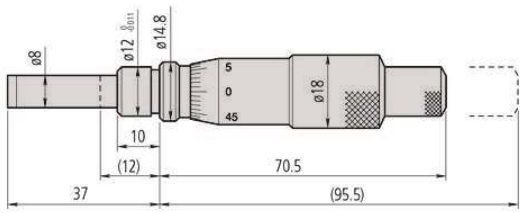

153-203 + 153-204

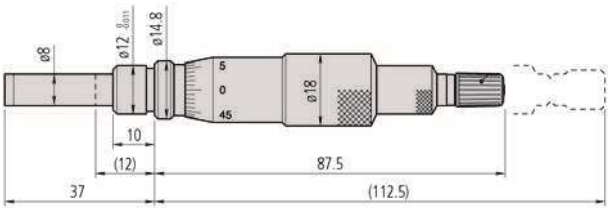

153-201 + 153-202

( ): with spindle full retracted

All products to be sold to commercial customers.
Product illustrations are without obligation. Product descriptions, in particular any and all technical specifications, are only binding when explicitly agreed upon.

Micrometer Heads with Non-Rotating Spindle

Specifications

Measuring face	Carbide-tipped

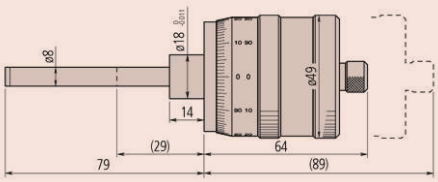

197-101

Series 197 - Non-rotating spindle and large thimble

- Micrometer Head with non-rotating spindle and 1 mm spindle pitch.
- Measurement values can be read directly from the 100-step graduation thimble without the complication of having to consider 1/2 mm values, which simplifies reading and therefore reduces the chance of error.
- The scale is set to zero by rotating the barrel.

197-101

Metric

No.	Range [mm]	Graduation	Maximum Permissible Error J MPE	Spindle end	Spindle pitch	Stem Ø	Stem	Special features	Mass [g]
197-101	0 - 50	0,005 mm	±5 µm	Flat	1 mm	18 mm	Plain	Bidirectional graduation	300

Specifications

Measuring face	Carbide-tipped

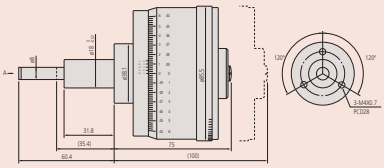

153-301

Series 153 - Fine graduation and high accuracy

- Extra-large-diameter micrometer head with non-rotating spindle.

153-301

Metric

No.	Range [mm]	Graduation	Maximum Permissible Error J MPE	Spindle end	Spindle pitch	Stem Ø	Stem	Special features	Mass [g]
153-301	0 - 25	0,0005 mm	±1 µm / ±0,5 µm	Flat	0,5 mm	18 mm	Plain	Bidirectional graduation	750

All products to be sold to commercial customers.
Product illustrations are without obligation. Product descriptions, in particular any and all technical specifications, are only binding when explicitly agreed upon.

Mitutoyo

Micrometer Head Accessories

Mitutoyo offers various types of fixture designed for micrometer heads, which you can use for a wide range of applications, that have the following benefits:

- These fixtures are high quality and durable, manufactured from nickel-plated cast iron.
- Two types of fixture for micrometer heads are available, depending on whether the head has a plain stem or is a clamp nut type.

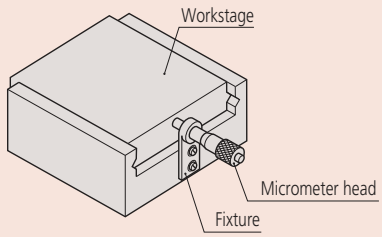

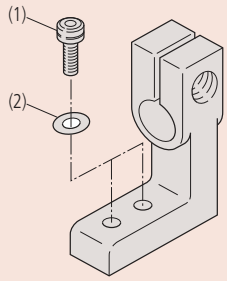

Fixtures for use with plain stem type micrometer heads are split, and clamp the stem by tightening a socket head screw (M3x0.5x12 mm).

Fixtures for micrometer heads with clamp nut

No.	A [mm]	B [mm]	C [mm]	D [mm]	E [mm]	F [mm]	G [mm]	H [mm]	I [mm]	J [mm]	K [mm]	L [mm]
303559	9,5	6	15	20	24	5	11	8	0,5	27,5	3,4	
303568	9,5	11,5	20	30	35	7	16	12	1,75	40	4,5	
303578	10	11,5	20	30	35	7	16	12	1,75	40	4,5	
303563	9,5	6	30	37,5	4,5	15	10	15	3,4			
303572	9,5	11,5	40	50	6,5	18	15	20	4,5			
303582	10	11,5	40	50	6,5	18	15	20	4,5			
303561	9,5	6	40	3,5	30	15	3,4					
303570	9,5	11,5	60	5,5	40	20	4,5					
303580	10	11,5	60	5,5	40	20	4,5					
303565	9,5	6	15	15	25	8,5	7,5	10	10	27,5	3,4	0,75
303574	9,5	11,5	15	20	40	8,5	10	20	15	35	4,5	1,25
303584	10	11,5	15	20	40	8,5	10	20	15	35	4,5	1,25

Fixtures for plain stem type micrometer heads

No.	A [mm]	B [mm]	C [mm]	D [mm]	E [mm]	F [mm]	G [mm]	H [mm]	I [mm]	J [mm]	K [mm]	L [mm]	M [mm]
303560	9,5	9	15	20	23	5	11	8	1,5	32,5	4,5	ø3,4	M3x0,5
303569	9,5	14,5	20	30	35	7	16	12	3,25	42,5	7,25	4,5	M3x0,5
303579	10	14,5	20	30	35	7	16	12	3,25	42,5	7,25	4,5	M3x0,5
303564	9,5	9	30	42,5	4	15	10	15	4,5	3,4	M3x0,5		
303573	9,5	14,5	40	52,5	6	18	15	20	7,25	4,5	M3x0,5		
303583	10	14,5	40	52,5	6	18	15	20	7,25	4,5	M3x0,5		
303562	9,5	9	15	20	40	3	30	15	3,4	M3x0,5			
303571	9,5	14,5	15	22,5	60	5	40	20	4,5	M3x0,5			
303581	10	14,5	15	22,5	60	5	40	20	4,5	M3x0,5			
303566	9,5	9	15	15	25	8,5	7,5	10	10	32,5	4,5	3,4	M3x0,5
303575	9,5	14,5	15	20	40	8,5	10	20	15	40	7,25	4,5	M3x0,5
303585	10	14,5	15	20	40	8,5	10	20	15	40	7,25	4,5	M3x0,5

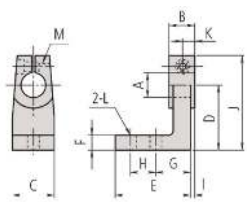

303560/69/79

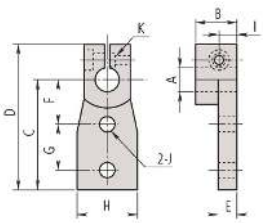

303564/73/83

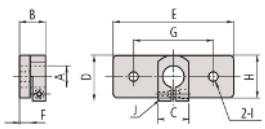

303562/71/81

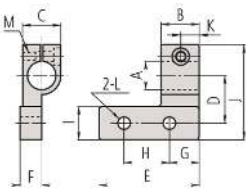

303566/75/85

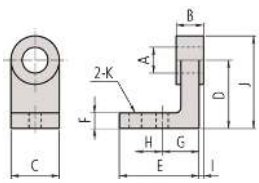

303559/68/78

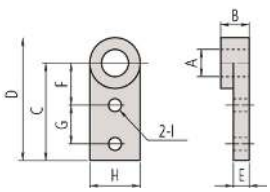

303563/72/82

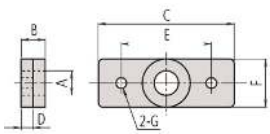

303561/70/80

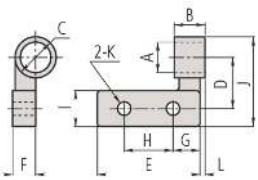

303565/74/84

All products to be sold to commercial customers.
Product illustrations are without obligation. Product descriptions, in particular any and all technical specifications, are only binding when explicitly agreed upon.

Inside Micrometers
Page 132

Bore Gauges
Page 154

Inside Measuring Instruments Accessories
Page 167

All products to be sold to commercial customers.
Product illustrations are without obligation. Product descriptions, in particular any and all technical specifications, are only binding when explicitly agreed upon.

Mitutoyo

Digimatic Holtests Individual

Series 468

These are three-point internal micrometers that offer you the following benefits:

- Individual micrometer.
- Titanium-coated measuring pins give you excellent durability and impact resistance.
- They also have excellent resistance against water and dust (IP65 protection level), allowing you to use this product in machining situations that include splashing coolant fluid.
- Large LCD display with character height of 7,5 mm enables you to read measurements easily.
- Without setting rings or extensions.

Dust- and Waterproof IP65

www.tuv.com ID 0000021605

Titanium coated measuring surfaces for durability

Metric

No.	Range [mm]	Digital step	Maximum Permissible Error J MPE	Mass [g]
468-161	6 - 8	0,001 mm	±2 µm	370
468-162	8 - 10	0,001 mm	±2 µm	370
468-163	10 - 12	0,001 mm	±2 µm	370
468-164	12 - 16	0,001 mm	±3 µm	400
468-165	16 - 20	0,001 mm	±3 µm	400
468-166	20 - 25	0,001 mm	±3 µm	470
468-167	25 - 30	0,001 mm	±3 µm	480
468-168	30 - 40	0,001 mm	±3 µm	480
468-169	40 - 50	0,001 mm	±3 µm	500
468-170	50 - 63	0,001 mm	±3 µm	620
468-171	62 - 75	0,001 mm	±4 µm	630
468-172	75 - 88	0,001 mm	±4 µm	960
468-173	87 - 100	0,001 mm	±4 µm	970
468-174	100 - 125	0,001 mm	±5 µm	940
468-175	125 - 150	0,001 mm	±5 µm	1030
468-176	150 - 175	0,001 mm	±5 µm	1120
468-177	175 - 200	0,001 mm	±5 µm	1210
468-178	200 - 225	0,001 mm	±6 µm	1300
468-179	225 - 250	0,001 mm	±6 µm	1390
468-180	250 - 275	0,001 mm	±6 µm	1480
468-181	275 - 300	0,001 mm	±6 µm	1570

Functions	Series 468
ABS / INC (INC ZERO)	●
Auto Power OFF after 20 min. non use	●
Low voltage alarm	●
Function lock	●
HOLD	●
2 x PRESET	●
Data output	●

Specifications

Display	LCD, character height 7,5 mm
Measuring pins	Titanium coated tungsten carbide (6-12 mm) titanium coated hardened steel (12-300 mm) taper: tungsten carbide
Power supply	1 battery SR-44
Battery life	Approx. 1,2 years
Delivered	Including box, key, 1 battery, certificate of inspection

Optional accessories

No.	Description
05CZA662	Digimatic Cable with Data Button IP Type, 1m, Micrometer Type
05CZA663	Digimatic Cable with Data Button IP Type, 2m, Micrometer Type
06AFM380B	USB Input Tool Direct (Digimatic USB), Digi/Digi2, With Data Button IP Micrometer Type
02AZD730G	U-WAVE-T, IP67 Type, Wireless Transmitter
02AZD880G	U-WAVE-T, Buzzer Type, Wireless Transmitter
02AZD790B	U-WAVE-T Connection Cable B, with Data Button IP Micrometer Type
952322	Holtest, Borematic Extension 100mm, 6-12mm
952621	Holtest, Borematic Extension 150mm, 12-20mm
952622	Holtest, Borematic Extension 150mm, 20-50mm
952623	Holtest, Borematic Extension 150mm, 50-300mm
156-101-10	Micrometer Stand, Adjustable Angle Type, for Micrometer 0-100mm/0-4"
04AZB157	Holder for Micrometer Stand, for Series 468

Consumable spares

No.	Description
938882	Battery SR44 1.5V

All products to be sold to commercial customers.
Product illustrations are without obligation. Product descriptions, in particular any and all technical specifications, are only binding when explicitly agreed upon.

Digimatic Holtests Individual

Holtest with optional accessories
Stand 156-101-10
Printer DP1-VA 264-505D
Holder 04AZB157
Cable 05CZA662

04AZB157

Extension rod for deep holes

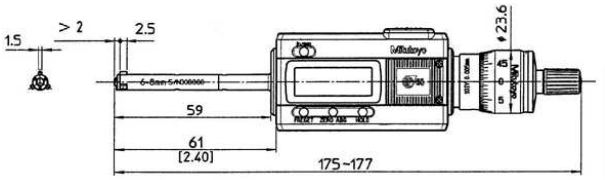

468-161, 468-162, 468-163

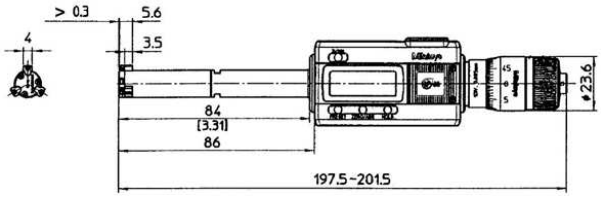

468-164, 468-165

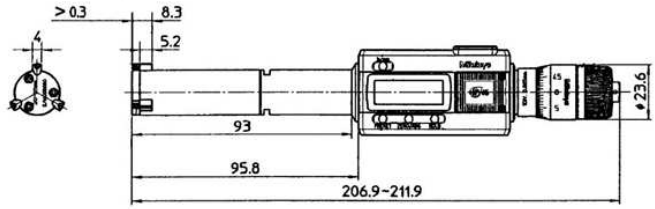

468-166, 468-167

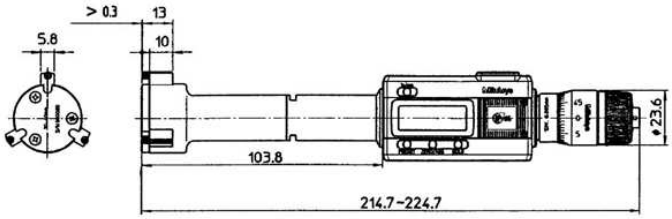

468-168, 468-169

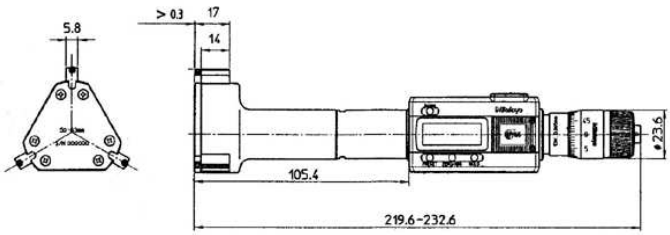

468-170, 468-171, 468-172, 468-173

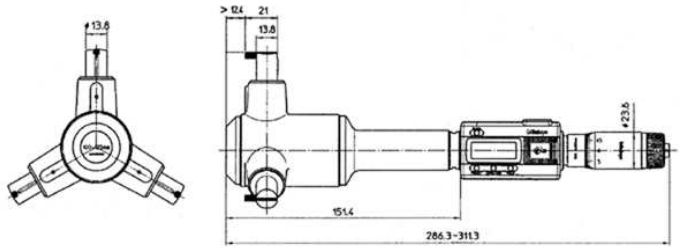

468-174, 468-175, 468-176, 468-177, 468-178, 468-179, 468-180, 468-181

All products to be sold to commercial customers.
Product illustrations are without obligation. Product descriptions, in particular any and all technical specifications, are only binding when explicitly agreed upon.

Mitutoyo

Digimatic Holtest Interchangeable Head Sets

Series 468

These are three-point internal micrometers that offer you the following benefits:

- Interchangeable head set.
- Titanium-coated measuring pins give you excellent durability and impact resistance.
- They also have excellent resistance against water and dust (IP65 protection level), allowing you to use this product in machining situations that include splashing coolant fluid.
- Large LCD display with character height of 7,5 mm enables you to read measurements easily.
- With setting rings and extensions.

468-973

Titanium coated measuring surfaces for durability

Metric

No.	Range [mm]	Digital step	Individual ranges [mm]	Setting rings included	Remarks	Mass [g]
468-971	6 - 12	0,001 mm	6-8, 8-10, 10-12	ø8 mm (177-125) ø10 mm (177-126)	100 mm extension	420
468-972	12 - 20	0,001 mm	12-16, 16-20	ø16 mm (177-177)	150 mm extension	560
468-973	20 - 50	0,001 mm	20-25, 25-30, 30-40, 40-50	ø25 mm (177-139) ø40 mm (177-290)	150 mm extension	1170
468-974	50 - 100	0,001 mm	50-63, 62-75, 75-88, 87-100	ø62 mm (177-314) ø87 mm (177-318)	150 mm extension	2420
468-975	100 - 200	0,001 mm	100-125, 125-150, 150-175, 175-200	ø125 mm (177-298) ø175 mm (177-302)	150 mm extension	3540

Holtest with optional accessories
Stand 156-101-10
Printer DP1-VA 264-505D
Holder 04AZB157
Cable 05CZA662

Extension

Functions	Series 468
ABS / INC (INC ZERO)	●
Auto Power OFF after 20 min. non use	●
Low voltage alarm	●
Function lock	●
HOLD	●
2 x PRESET	●
Data output	●

Specifications

Display	LCD, character height 7,5 mm
Measuring pins	Titanium coated tungsten carbide (6-12 mm) titanium coated hardened steel (12-200 mm) taper: tungsten carbide
Power supply	1 battery SR-44
Battery life	Approx. 1,2 years
Delivered	Including box, key, 1 battery, setting ring, extension, certificate of inspection (instruments only - certificate of inspection for setting rings not included).

Optional accessories

No.	Description
05CZA662	Digimatic Cable with Data Button IP Type, 1m, Micrometer Type
05CZA663	Digimatic Cable with Data Button IP Type, 2m, Micrometer Type
06AFM380B	USB Input Tool Direct (Digimatic USB), Digi/Digi2, With Data Button IP Micrometer Type
02AZD730G	U-WAVE-T, IP67 Type, Wireless Transmitter
02AZD880G	U-WAVE-T, Buzzer Type, Wireless Transmitter
02AZD790B	U-WAVE-T Connection Cable B, with Data Button IP Micrometer Type
952322	Holtest, Borematic Extension 100mm, 6-12mm
952621	Holtest, Borematic Extension 150mm, 12-20mm
952622	Holtest, Borematic Extension 150mm, 20-50mm
952623	Holtest, Borematic Extension 150mm, 50-300mm
156-101-10	Micrometer Stand, Adjustable Angle Type, for Micrometer 0-100mm/0-4"
04AZB157	Holder for Micrometer Stand, for Series 468

Consumable spares

No.	Description
938882	Battery SR44 1.5V

04AZB157

All products to be sold to commercial customers.
Product illustrations are without obligation. Product descriptions, in particular any and all technical specifications, are only binding when explicitly agreed upon.

Digimatic Holtest Complete Unit Sets

Functions	Series 468
ABS / INC (INC ZERO)	●
Auto Power OFF after 20 min. non use	●
Low voltage alarm	●
Function lock	●
HOLD	●
2 x PRESET	●
Data output	●

Specifications

Display	LCD, character height 7,5 mm
Measuring pins	Titanium coated tungsten carbide (6-12 mm) titanium coated hardened steel (12-100 mm) taper: tungsten carbide
Power supply	1 battery SR-44
Battery life	Approx. 1,2 years
Delivered	Including box, key, 1 battery, setting ring, certificate of inspection (instruments only - certificate of inspection for setting rings not included).

Optional accessories

No.	Description
05CZA662	Digimatic Cable with Data Button IP Type, 1m, Micrometer Type
05CZA663	Digimatic Cable with Data Button IP Type, 2m, Micrometer Type
06AFM380B	USB Input Tool Direct (Digimatic USB), Digi/Digi2, With Data Button IP Micrometer Type
02AZD730G	U-WAVE-T, IP67 Type, Wireless Transmitter
02AZD880G	U-WAVE-T, Buzzer Type, Wireless Transmitter
02AZD790B	U-WAVE-T Connection Cable B, with Data Button IP Micrometer Type
952322	Holtest, Boremetic Extension 100mm, 6-12mm
952621	Holtest, Boremetic Extension 150mm, 12-20mm
952622	Holtest, Boremetic Extension 150mm, 20-50mm
952623	Holtest, Boremetic Extension 150mm, 50-300mm
156-101-10	Micrometer Stand, Adjustable Angle Type, for Micrometer 0-100mm/0-4"
04AZB157	Holder for Micrometer Stand, for Series 468

Consumable spares

No.	Description
938882	Battery SR44 1.5V

04AZB157

Series 468

These are three-point internal micrometers that offer you the following benefits:

- Complete unit set.
- Titanium-coated measuring pins give you excellent durability and impact resistance.
- They also have excellent resistance against water and dust (IP65 protection level), allowing you to use this product in machining situations that include splashing coolant fluid.
- Large LCD display with character height of 7,5 mm enables you to read measurements easily.
- With setting rings but without extensions.

468-983

Titanium coated measuring surfaces for durability

Metric

Measuring surfaces titanium coated. Carbide taper and contact points.

No.	Range [mm]	Digital step	Individual ranges	Models included	Setting rings included	Mass [g]
468-981	6 - 12	0,001 mm	6-8, 8-10, 10-12 mm	468-161 / 468-162 / 468-163	ø8 mm (177-125) ø10 mm (177-126)	1160
468-982	12 - 25	0,001 mm	12-16, 16-20, 20-25 mm	468-164 / 468-165 / 468-166	ø16 mm (177-177) ø20 mm (177-286)	1290
468-983	25 - 50	0,001 mm	25-30, 30-40, 40-50 mm	468-167 / 468-168 / 468-169	ø30 mm (177-288) ø40 mm (177-290)	1480
468-984	50 - 75	0,001 mm	50-63, 62-75 mm	468-170 / 468-171	ø62 mm (177-314)	1270
468-985	75 - 100	0,001 mm	75-88, 87-100 mm	468-172 / 468-173	ø87 mm (177-318)	1990

Extension

Holtest with optional accessories
Stand 156-101-10
Printer DP1-VA 264-505D
Holder 04AZB157
Cable 05CZA662

All products to be sold to commercial customers.
Product illustrations are without obligation. Product descriptions, in particular any and all technical specifications, are only binding when explicitly agreed upon.

Holtests Metric

Series 368

These are three-point and two-point internal micrometers that offer you the following benefits:

- Titanium-coated measuring pins give you excellent durability and impact resistance (3-point type).
- Three-point micrometer allows stable measurement through automatic centring.
- It is delivered without setting rings or extensions.

368-001 368-168 368-170 368-174

Metric

No.	Range [mm]	Graduation	Maximum Permissible Error J MPE	Mass [g]	a [mm]	b [mm]	c [mm]	L1 [mm]	L2 [mm]
368-001	2 - 2.5	0,001 mm	±2 µm	88			2	12	103.5-104
368-002	2.5 - 3	0,001 mm	±2 µm	88			2	12	103.5-104
368-003	3 - 4	0,001 mm	±2 µm	91			2	22	113-114
368-004	4 - 5	0,001 mm	±2 µm	91			2	22	113-114
368-005	5 - 6	0,001 mm	±2 µm	91			2	22	113-114
368-161	6 - 8	0,001 mm	±2 µm	60	2		2,5	59	102-104
368-162	8 - 10	0,001 mm	±2 µm	60	2		2,5	59	102-104
368-163	10 - 12	0,001 mm	±2 µm	60	2		2,5	59	102-104
368-164	12 - 16	0,005 mm	±3 µm	150	0,3	5,6	3,5	82	126-130
368-165	16 - 20	0,005 mm	±3 µm	160	0,3	5,6	3,5	82	126-130
368-166	20 - 25	0,005 mm	±3 µm	260	0,3	8,3	5,2	94	126-130
368-167	25 - 30	0,005 mm	±3 µm	280	0,3	8,3	5,2	94	137-142
368-168	30 - 40	0,005 mm	±3 µm	290	0,3	13	10	102	145-155
368-169	40 - 50	0,005 mm	±3 µm	330	0,3	13	10	102	145-155
368-170	50 - 63	0,005 mm	±3 µm	440	0,3	17	14	105	150-163
368-171	62 - 75	0,005 mm	±4 µm	450	0,3	17	14	105	150-163
368-172	75 - 88	0,005 mm	±4 µm	570	0,3	17	14	105	150-165
368-173	87 - 100	0,005 mm	±4 µm	580	0,3	17	14	105	150-165
368-174	100 - 125	0,005 mm	±5 µm	1030	12,4	21	13,8	161	227-252
368-175	125 - 150	0,005 mm	±5 µm	1120	12,4	21	13,8	161	227-252
368-176	150 - 175	0,005 mm	±5 µm	1210	12,4	21	13,8	161	227-252
368-177	175 - 200	0,005 mm	±5 µm	1320	12,4	21	13,8	161	227-252
368-178	200 - 225	0,005 mm	±6 µm	1430	12,4	21	13,8	161	227-252
368-179	225 - 250	0,005 mm	±6 µm	1550	12,4	21	13,8	161	227-252
368-180	250 - 275	0,005 mm	±6 µm	1700	12,4	21	13,8	161	227-252
368-181	275 - 300	0,005 mm	±6 µm	1870	12,4	21	13,8	161	227-252

Specifications

Scale	Thimble and sleeve satin chrome finish, Up to 12 mm : ø17 mm Over 12 mm : ø23 mm
Measuring Surface/Pins	2 - 6 mm: carbide 6 - 12 mm: titanium coated tungsten carbide 12 - 300 mm: titanium coated hardened steel taper: tungsten carbide
Measuring spindle	Spindle pitch 0,5 mm
Measuring method	2-6 mm : 2-point 6-300 mm : 3-point
Delivered	Including box, key, certificate of inspection

Optional accessories

No.	Description
952621	Holtest, Boremetic Extension 150mm, 12-20mm
952622	Holtest, Boremetic Extension 150mm, 20-50mm
952623	Holtest, Boremetic Extension 150mm, 50-300mm
952322	Holtest, Boremetic Extension 100mm, 6-12mm

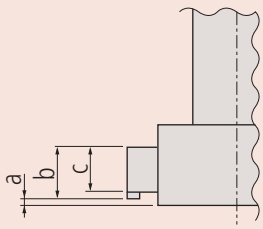

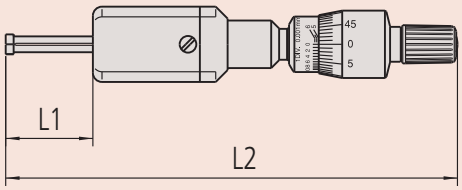

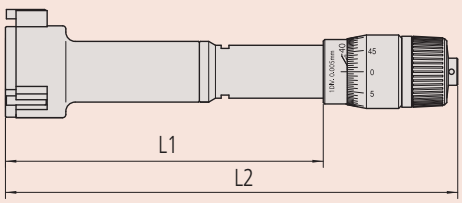

All products to be sold to commercial customers.
Product illustrations are without obligation. Product descriptions, in particular any and all technical specifications, are only binding when explicitly agreed upon.

Holtests Set

Series 368

This is a set of three-point and two-point internal micrometers that offers you the following
benefits:

- Complete unit set.
- Carbide measuring surface (2-6 mm range)
- Titanium-coated measuring pins (> 6 mm range) give you excellent durability and impact resistance.
- Delivered with setting rings

Specifications

Scale	Thimble and sleeve satin chrome finish, Up to 12 mm : ø17 mm Over 12 mm : ø23 mm
Measuring Surface/Pins	2 - 6 mm: carbide 6 - 12 mm: titanium coated tungsten carbide 12 - 300 mm: titanium coated hardened steel taper: tungsten carbide
Measuring method	2-6 mm 2-point 6-200 mm 3-point
Delivered	Including box, key, setting ring, extension, certificate of inspection (instruments only - certificate of inspection for setting rings not included).

368-914

368-915

368-906

368-907

368-911

368-912

368-913

Metric

No.	Range [mm]	Graduation	Individual ranges	Models included	Setting rings included	Extension rod	Mass [g]
368-906	2 - 3	0,001 mm	2-2,5, 2,5-3 mm	368-001 / 368-002	ø2,5 mm (177-208)		310
368-907	3 - 6	0,001 mm	3-4, 4-5, 5-6 mm	368-003 / 368-004 / 368-005	ø4 mm (177-204) ø5 mm (177-205)		505
368-911	6 - 12	0,001 mm	6-8, 8-10, 10-12 mm	368-161 / 368-162 / 368-163	ø8 mm (177-125) ø10 mm (177-126)	952322	180
368-912	12 - 20	0,005 mm	12-16, 16-20 mm	368-164 / 368-165	ø16 mm (177-177)	952621	280
368-913	20 - 50	0,005 mm	20-25, 25-30, 30-40, 40-50 mm	368-166 / 368-167 / 368-168 / 368-169	ø25 mm (177-139) ø40 mm (177-290)	952622	960
368-914	50 - 100	0,005 mm	50-63, 62-75, 75-88, 87-100 mm	368-170 / 368-171 / 368-172 / 368-173	ø62 mm (177-314) ø87 mm (177-318)	952623	2030
368-915	100 - 200	0,005 mm	100-125, 125-150, 150-175, 175-200 mm	368-174 / 368-175 / 368-176 / 368-177	ø125 mm (177-298) ø175 mm (177-302)	952623	4680

All products to be sold to commercial customers.
Product illustrations are without obligation. Product descriptions, in particular any and all technical specifications, are only binding when explicitly agreed upon.

Mitutoyo

Economy Holtests

Series 368

This is an economy version of a three-point internal micrometer, that offers you the following benefits:

- Hardened tool steel anvils and tapers allow a more economically priced and affordable tool.
- Individual types without setting rings or extensions.

368-769 368-770 368-774

Metric

No.	Range [mm]	Graduation	Maximum Permissible Error J MPE	Mass [g]	a [mm]	b [mm]	L1 [mm]	L2 [mm]
368-764	12 - 16	0,005 mm	±3 µm	150	2,6	3,5	126 - 130	82
368-765	16 - 20	0,005 mm	±3 µm	150	2,6	3,5	126 - 130	82
368-766	20 - 25	0,005 mm	±3 µm	260	3,4	5,2	137 - 142	94
368-767	25 - 30	0,005 mm	±3 µm	280	3,4	5,2	137 - 142	94
368-768	30 - 40	0,005 mm	±3 µm	290	3,4	10	145 - 155	102
368-769	40 - 50	0,005 mm	±3 µm	330	3,4	10	145 - 155	102
368-770	50 - 63	0,005 mm	±3 µm	440	3,4	14	150 - 163	105
368-771	62 - 75	0,005 mm	±4 µm	450	3,4	14	150 - 163	105
368-772	75 - 88	0,005 mm	±4 µm	560	3,4	14	150 - 163	105
368-773	87 - 100	0,005 mm	±4 µm	570	3,4	14	150 - 163	105
368-774	100 - 125	0,005 mm	±5 µm	1020	19,6	13,8	227 - 252	161
368-775	125 - 150	0,005 mm	±5 µm	1110	19,6	13,8	227 - 252	161
368-776	150 - 175	0,005 mm	±5 µm	1200	19,6	13,8	227 - 252	161
368-777	175 - 200	0,005 mm	±5 µm	1300	19,6	13,8	227 - 252	161
368-778	200 - 225	0,005 mm	±6 µm	1420	19,6	13,8	227 - 252	161
368-779	225 - 250	0,005 mm	±6 µm	1540	19,6	13,8	227 - 252	161
368-780	250 - 275	0,005 mm	±6 µm	1690	19,6	13,8	227 - 252	161
368-781	275 - 300	0,005 mm	±6 µm	1860	19,6	13,8	227 - 252	161

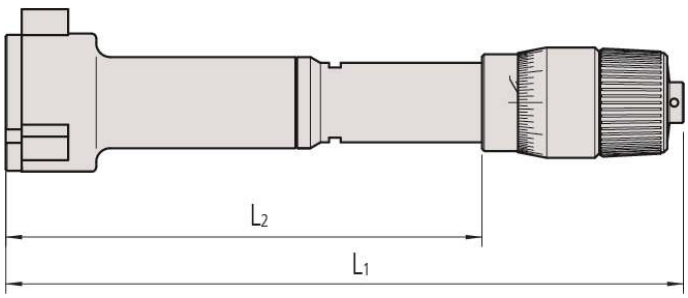

Specifications

Scale	Thimble and sleeve satin chrome finish, Up to 12 mm : Ø17 mm Over 12 mm : Ø23 mm
Measuring spindle	Spindle pitch 0,5 mm
Measuring face	hardened steel Taper: hardened steel
Measuring method	3-point
Delivered	Including box, key, certificate of inspection

Optional accessories

No.	Description
952621	Holtest, Boremat Extension 150mm, 12-20mm
952622	Holtest, Boremat Extension 150mm, 20-50mm
952623	Holtest, Boremat Extension 150mm, 50-300mm

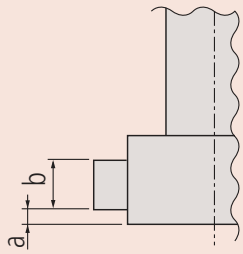

All products to be sold to commercial customers.
Product illustrations are without obligation. Product descriptions, in particular any and all technical specifications, are only binding when explicitly agreed upon.

Economy Holtest Sets

Series 368

This is an economy version of a three-point internal micrometer, that offers you the following benefits:

- Hardened tool steel anvils and tapers allow a more economically priced and affordable tool.
- Individual types without setting rings or extensions.
- Sets with setting rings and extensions.

368-991

368-992

368-993

368-994

Specifications

Scale	Thimble and sleeve satin chrome finish, Up to 12 mm : Ø17 mm Over 12 mm : Ø23 mm
Measuring method	3-point
Delivered	Including box, key, setting ring, extension, certificate of inspection (instruments only - certificate of inspection for setting rings not included).

Optional accessories

No.	Description
952621	Holtest, Boremetic Extension 150mm, 12-20mm
952622	Holtest, Boremetic Extension 150mm, 20-50mm
952623	Holtest, Boremetic Extension 150mm, 50-300mm

Extension

Metric

No.	Range [mm]	Graduation	Individual ranges	Models included	Setting rings included	Extension rod	Mass [g]
368-991	12 - 20	0,005 mm	12-16, 16-20 mm	368-764 / 368-765	ø16 mm (177-177)	952621	310
368-992	20 - 50	0,005 mm	20-25, 25-30, 30-40, 40-50 mm	368-766 / 368-767 368-768 / 368-769	ø25 mm (177-139) ø40 mm (177-290)	952622	1160
368-993	50 - 100	0,005 mm	50-63, 62-75, 75-88, 87-100 mm	368-770 / 368-771 / 368-772 / 368-773	ø62 mm (177-314) ø87 mm (177-318)	952623	2020
368-994	100 - 200	0,005 mm	100-125, 125-150, 150-175, 175-200 mm	368-774 / 368-775 / 368-776 / 368-777	ø125 mm (177-298) ø175 mm (177-302)	952623	4630

All products to be sold to commercial customers.
Product illustrations are without obligation. Product descriptions, in particular any and all technical specifications, are only binding when explicitly agreed upon.

ABSOLUTE Borematic

ABSOLUTE Borematic Individual Unit

This is a individual unit Three-Point Digimatic Snap Open Bore Gauge.
It offers you the following benefits:

- It enables you to take measurements easily and quickly.
- Titanium-coated measuring pins gives you excellent durability and impact resistance.
- 330° rotatable display unit also gives you easy reading at any angle.
- GO/NG tolerance judgement function.

568-361

568-364

568-366

568-368

Metric

No.	Range [mm]	Digital step	Maximum Permissible Error J MPE	Mass [g]	a [mm]	b [mm]	c [mm]	L1 [mm]	L2 [mm]
568-361	6 - 8	0,001 mm	±5 µm	480	2		2,5	284	83
568-362	8 - 10	0,001 mm	±5 µm	485	2		2,5	284	83
568-363	10 - 12	0,001 mm	±5 µm	485	2		2,5	284	83
568-364	12 - 16	0,001 mm	±5 µm	475	0,3	5,6	3,5	255	53
568-365	16 - 20	0,001 mm	±5 µm	480	0,3	5,6	3,5	255	53
568-366	20 - 25	0,001 mm	±6 µm	540	0,3	8,3	5,2	261	59
568-367	25 - 30	0,001 mm	±6 µm	555	0,3	8,3	5,2	261	59
568-368	30 - 40	0,001 mm	±6 µm	565	0,3	13	10	269	67
568-369	40 - 50	0,001 mm	±6 µm	610	0,3	13	10	269	67
568-370	50 - 63	0,001 mm	±6 µm	730	0,3	17	14	277	75
568-371	62 - 75	0,001 mm	±6 µm	740	0,3	17	14	277	75
568-372	75 - 88	0,001 mm	±6 µm	790	0,3	17	14	277	75
568-373	87 - 100	0,001 mm	±6 µm	800	0,3	17	14	277	75
568-374	100 - 113	0,001 mm	±6 µm	900	0,3	17	14	277	75
568-375	112 - 125	0,001 mm	±6 µm	910	0,3	17	14	277	75

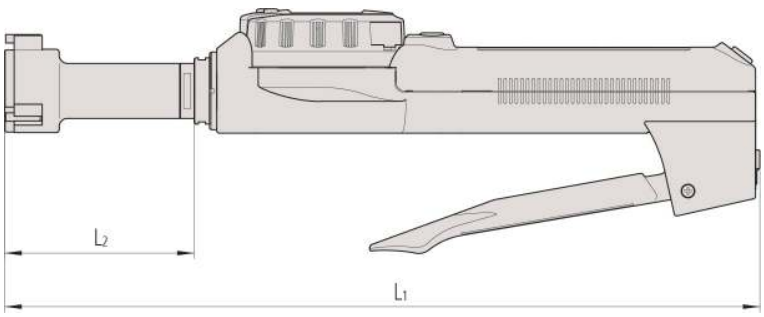

Functions	ABSOLUTE Borematic Individual Unit
ON/OFF	●
ABS / INC (INC ZERO)	●
Function lock	●
DATA (output with cable) / HOLD (display value)	●
2 x PRESET	●
Data output	●
GO/±NG judgement	●

Specifications

Display	LCD, character height: 11 mm
Measuring pins	Titanium coated tungsten carbide (6 - 12 mm) Titanium coated hardened steel (12 - 125 mm)
Power supply	1 battery SR-44
Battery life	Approx. 5000 hours
Delivered	Including box, key, 1 battery, certificate of inspection

Optional accessories

No.	Description
905338	Digimatic Cable, Flat Straight Type, 1m
905409	Digimatic Cable, Flat Straight Type, 2m
06AFM380F	USB Input Tool Direct (Digimatic USB), Digi/Digi2, Flat Straight Type
02AZD730G	U-WAVE-T, IP67 Type, Wireless Transmitter
02AZD880G	U-WAVE-T, Buzzer Type, Wireless Transmitter
02AZD790F	U-WAVE-T Connection Cable F, Flat Straight Type
952322	Holtest, Borematic Extension 100mm, 6-12mm
952621	Holtest, Borematic Extension 150mm, 12-20mm
952622	Holtest, Borematic Extension 150mm, 20-50mm
952623	Holtest, Borematic Extension 150mm, 50-300mm

Consumable spares

No.	Description
938882	Battery SR44 1.5V

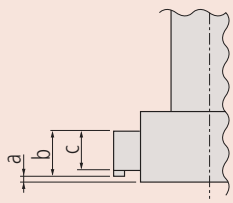

Titanium coated measuring surfaces for durability

All products to be sold to commercial customers.
Product illustrations are without obligation. Product descriptions, in particular any and all technical specifications, are only binding when explicitly agreed upon.

ABSOLUTE Borematic

Functions	ABSOLUTE Borematic Interchangeable Head Sets
ON/OFF	●
ABS / INC (INC ZERO)	●
Function lock	●
DATA (output with cable) / HOLD (display value)	●
2 x PRESET	●
Data output	●
GO/±NG judgement	●

Specifications

Display	LCD, character height: 11 mm
Measuring pins	Titanium coated tungsten carbide (6 - 12 mm) Titanium coated hardened steel (12 - 125 mm)
Power supply	1 battery SR-44
Battery life	Approx. 5000 hours
Delivered	Including box, key, 1 battery, setting ring, certificate of inspection (instruments only - certificate of inspection for setting rings not included).

Optional accessories

No.	Description
905338	Digimatic Cable, Flat Straight Type, 1m
905409	Digimatic Cable, Flat Straight Type, 2m
06AFM380F	USB Input Tool Direct (Digimatic USB), Digi/Digi2, Flat Straight Type
02AZD730G	U-WAVE-T, IP67 Type, Wireless Transmitter
02AZD880G	U-WAVE-T, Buzzer Type, Wireless Transmitter
02AZD790F	U-WAVE-T Connection Cable F, Flat Straight Type
952322	Holtest, Borematic Extension 100mm, 6-12mm
952621	Holtest, Borematic Extension 150mm, 12-20mm
952622	Holtest, Borematic Extension 150mm, 20-50mm
952623	Holtest, Borematic Extension 150mm, 50-300mm

Consumable spares

No.	Description
938882	Battery SR44 1.5V

Titanium coated measuring surfaces for durability

ABSOLUTE Borematic Interchangeable Head Sets

ABSOLUTE®

PROPRIETARY INSPECTION CERTIFICATE

This is a Three-Point Digimatic Snap Open Bore Gauge Set with one display unit and interchangeable heads.
It offers you the following benefits:

- It enables you to take measurements easily and quickly.
- Titanium-coated measuring pins gives you excellent durability and impact resistance.
- 330° rotatable display unit also gives you easy reading at any angle.
- GO/NG tolerance judgement function.

568-924

568-926

Metric

No.	Range [mm]	Digital step	Individual ranges	Setting rings included	Mass [g]
568-924	6 - 12	0,001 mm	6-8 mm 8-10 mm 10-12 mm	Ø8 mm (177-125) Ø10 mm (177-126)	530
568-925	12 - 25	0,001 mm	12-16 mm 16-20 mm 20-25 mm	Ø16 mm (177-177) Ø20 mm (177-286)	690
568-926	25 - 50	0,001 mm	25-30 mm 30-40 mm 40-50 mm	Ø30 mm (177-288) Ø40 mm (177-290)	930
568-927	50 - 100	0,001 mm	50-63 mm 62-75 mm 75-88 mm 87-100 mm	Ø62 mm (177-314) Ø87 mm (177-318)	1850

All products to be sold to commercial customers.
Product illustrations are without obligation. Product descriptions, in particular any and all technical specifications, are only binding when explicitly agreed upon.

Mitutoyo

ABSOLUTE Borematic

ABSOLUTE Borematic Complete Unit Sets

This is a Three-Point Digimatic Snap Open Bore Gauge Set with a display unit for each measuring head.
It offers you the following benefits:

- It enables you to take measurements easily and quickly.
- Titanium-coated measuring pins gives you excellent durability and impact resistance.
- 330° rotatable display unit also gives you easy reading at any angle.
- GO/NG tolerance judgement function.

568-959

Metric

No.	Range [mm]	Digital step	Individual ranges	Setting rings included	Mass [g]
568-955	6 - 12	0,001 mm	6-8 mm 8-10 mm 10-12 mm	Ø8 mm (177-125) Ø10 mm (177-126)	1450
568-956	12 - 25	0,001 mm	12-16 mm 16-20 mm 20-25 mm	Ø16 mm (177-177) Ø20 mm (177-286)	1520
568-957	25 - 50	0,001 mm	25-30 mm 30-40 mm 40-50 mm	Ø30 mm (177-288) Ø40 mm (177-290)	1750
568-958	50 - 75	0,001 mm	50-63 mm 62-75 mm	Ø62 mm (177-314)	1490
568-959	75 - 100	0,001 mm	75-88 mm 87-100 mm	Ø87 mm (177-318)	1610

Functions	ABSOLUTE Borematic Complete Unit Sets
ON/OFF	●
ABS / INC (INC ZERO)	●
Function lock	●
DATA (output with cable) / HOLD (display value)	●
2 x PRESET	●
Data output	●
GO/±NG judgement	●

Specifications

Display	LCD, character height: 11 mm
Measuring pins	Titanium coated tungsten carbide (6 - 12 mm) Titanium coated hardened steel (12 - 125 mm)
Power supply	1 battery SR-44
Battery life	approx. 5000 hours
Delivered	Including box, key, battery, setting ring, certificate of inspection (instruments only - certificate of inspection for setting rings not included).

Optional accessories

No.	Description
905338	Digimatic Cable, Flat Straight Type, 1m
905409	Digimatic Cable, Flat Straight Type, 2m
06AFM380F	USB Input Tool Direct (Digimatic USB), Digi/Digi2, Flat Straight Type
02AZD730G	U-WAVE-T, IP67 Type, Wireless Transmitter
02AZD880G	U-WAVE-T, Buzzer Type, Wireless Transmitter
02AZD790F	U-WAVE-T Connection Cable F, Flat Straight Type
952322	Holtest, Borematic Extension 100mm, 6-12mm
952621	Holtest, Borematic Extension 150mm, 12-20mm
952622	Holtest, Borematic Extension 150mm, 20-50mm
952623	Holtest, Borematic Extension 150mm, 50-300mm

Consumable spares

No.	Description
938882	Battery SR44 1.5V

Titanium coated measuring surfaces for durability

All products to be sold to commercial customers.
Product illustrations are without obligation. Product descriptions, in particular any and all technical specifications, are only binding when explicitly agreed upon.

Measuring Heads and Adapter for 3-Point Internal Measuring Instruments

1 : Measuring head
2 : Adapter
3 : Display unit Boremetic

Measuring Heads and Adapter for 3-Point Internal Measuring Instruments

Metric

Display unit Boremetic

No.	Mass [g]
568-014	420

Metric

Measuring heads

No.	Range [mm]
04AZB136	6 - 8
04AZB137	8 - 10
04AZB138	10 - 12
04AZA719	12 - 16
04AZA720	16 - 20
04AZA728	20 - 25
04AZA729	25 - 30
04AZA737	30 - 40
04AZA738	40 - 50
04AZA750	50 - 63
04AZA751	62 - 75
04AZA752	75 - 88
04AZA753	87 - 100
04AZA941	100 - 113
04AZA942	112 - 125

Adapter

No.	Range [mm]
954595	6 - 12
216556	12 - 20
216557	20 - 50
216558	50 - 125

Note : These adapters are necessary to adapt measuring heads to the Boremetic display unit.

All products to be sold to commercial customers.
Product illustrations are without obligation. Product descriptions, in particular any and all technical specifications, are only binding when explicitly agreed upon.

Mitutoyo

Digimatic Caliper Jaw Inside Micrometers

Series 345

The Digimatic Caliper Jaw Inside Micrometer offers you the following benefits:

- Carbide measuring faces
- A setting standard (optional) is needed to accurately set the micrometer to the reference point.

345-250-30

Metric

No.	Range [mm]	Digital step	Maximum Permissible Error J MPE	Mass [g]
345-250-30	5 - 30	0,001 mm	±5 µm	305
345-251-30	25 - 50	0,001 mm	±6 µm	310

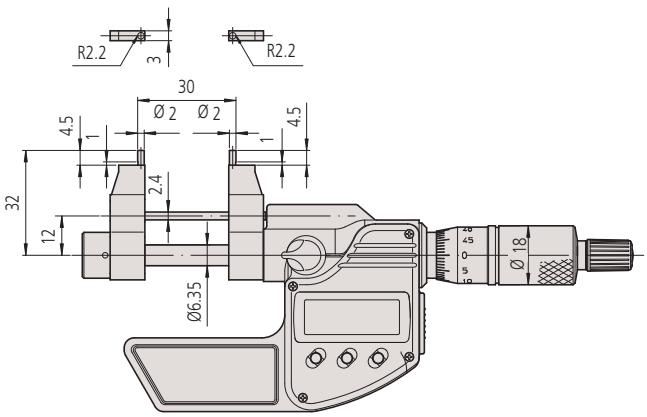

345-250-30

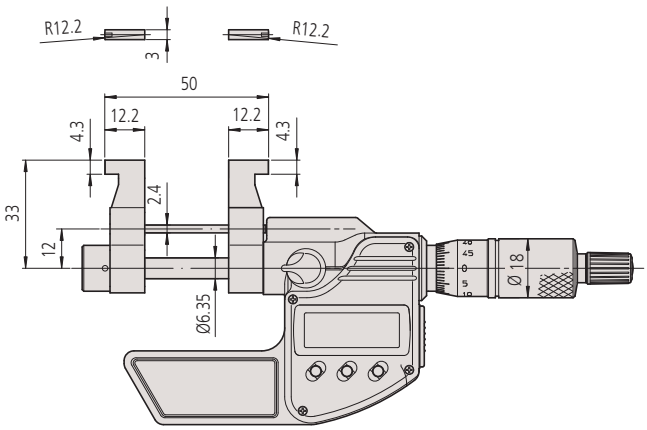

345-251-30

Functions	Series 345
Auto Power OFF after 20 min. non use	●
Low voltage alarm	●
Function lock	●
DATA/HOLD	●
2 x PRESET	●
Data output	●

Specifications

Scale	Thimble and sleeve satin chrome finish, ø18 mm
Measuring spindle	With spindle lock, spindle pitch 0,5 mm
Measuring face	Carbide tipped
Measuring force	1-6 N
Power supply	1 battery SR-44
Battery life	2,4 years
Delivered	Including box, key, 1 battery.

Optional accessories

No.	Description
05CZA662	Digimatic Cable with Data Button IP Type, 1m, Micrometer Type
05CZA663	Digimatic Cable with Data Button IP Type, 2m, Micrometer Type
06AFM380F	USB Input Tool Direct (Digimatic USB), Digi/Digi2, Flat Straight Type
264-623	U-WAVE fit, Buzzer Type, Wireless Transmitter for Micrometer
264-622	U-WAVE fit, IP67 Type, Wireless Transmitter for Micrometer
264-627	U-WAVE fit Bluetooth, Buzzer Type, Wireless Transmitter for Micrometer
264-626	U-WAVE fit Bluetooth, IP67 Type, Wireless Transmitter for Micrometer
02AZF310	Connection Unit, U-WAVE fit, Waterproof Type

Consumable spares

No.	Description
938882	Battery SR44 1.5V

All products to be sold to commercial customers.
Product illustrations are without obligation. Product descriptions, in particular any and all technical specifications, are only binding when explicitly agreed upon.

Caliper Jaw Inside Micrometers

Series 145

The Caliper Jaw Inside Micrometer offers you the following benefits:
- Carbide measuring faces
- A setting standard (optional) is needed to accurately set the micrometer to the reference point.

Specifications

Scale	Thimble and sleeve satin chrome finish, ø18 mm
Measuring spindle	With spindle lock, spindle pitch 0,5 mm
Measuring face	Carbide tipped
Measuring force	1-6 N
Delivered	Including box, key

Optional accessories

No.	Description
300400	Holder for Series 145
300401	Cap for Series 145

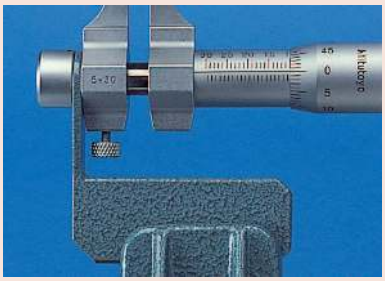

Holder and cap for:
145-185, 145-186

145-185

145-187

Metric

No.	Range [mm]	Graduation	Maximum Permissible Error J MPE	Mass [g]
145-185	5 - 30	0,01 mm	±5 µm	130
145-186	25 - 50	0,01 mm	±6 µm	140
145-187	50 - 75	0,01 mm	±7 µm	160
145-188	75 - 100	0,01 mm	±8 µm	180
145-189	100 - 125	0,01 mm	±9 µm	210
145-190	125 - 150	0,01 mm	±9 µm	230
145-191	150 - 175	0,01 mm	±10 µm	250
145-192	175 - 200	0,01 mm	±10 µm	270
145-217	200 - 225	0,01 mm	±11 µm	310
145-218	225 - 250	0,01 mm	±11 µm	330
145-219	250 - 275	0,01 mm	±12 µm	350
145-220	275 - 300	0,01 mm	±12 µm	370

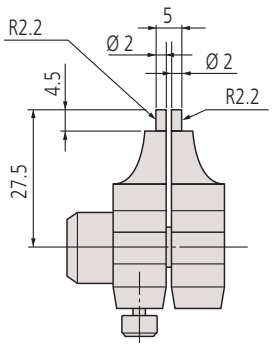

145-185

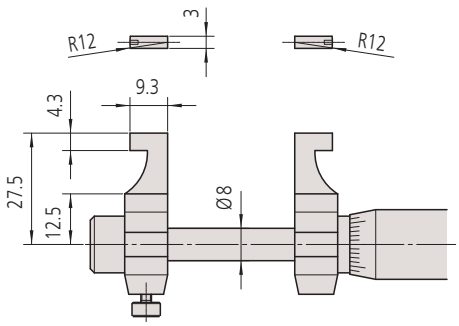

145-186

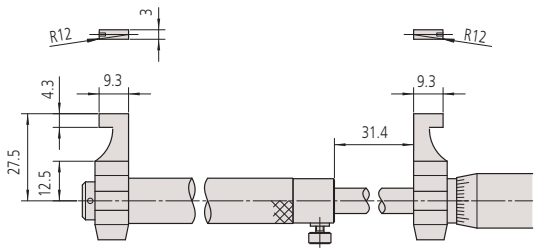

50-300 mm

All products to be sold to commercial customers.
Product illustrations are without obligation. Product descriptions, in particular any and all technical specifications, are only binding when explicitly agreed upon.

Mitutoyo

Tubular Inside Micrometers

Series 133

This is a standard single rod type inside micrometer (individual unit), with the following features:

- Standard single rod.
- Carbide measuring faces.

133-143 - 133-152

Metric

No.	Range [mm]	Graduation	Maximum Permissible Error J MPE	Mass [g]	a [mm]	b [mm]	L [mm]
133-143	50 - 75	0,01mm	±3 µm	50			
133-144	75 - 100	0,01mm	±4 µm	75			
133-145	100 - 125	0,01mm	±5 µm	130	5	3	100
133-146	125 - 150	0,01mm	±5 µm	160	5	3	125
133-147	150 - 175	0,01mm	±5 µm	170	18	15	150
133-148	175 - 200	0,01mm	±5 µm	180	18	15	175
133-149	200 - 225	0,01mm	±5 µm	200	18	15	200
133-150	225 - 250	0,01mm	±6 µm	210	18	15	225
133-151	250 - 275	0,01mm	±6 µm	235	18	15	250
133-152	275 - 300	0,01mm	±6 µm	245	18	15	275
133-153	300 - 325	0,01mm	±7 µm	265	18	15	300
133-154	325 - 350	0,01mm	±7 µm	285	18	15	325
133-155	350 - 375	0,01mm	±7 µm	300	18	15	350
133-156	375 - 400	0,01mm	±8 µm	315	18	15	375
133-157	400 - 425	0,01mm	±8 µm	330	18	15	400
133-158	425 - 450	0,01mm	±8 µm	340	18	15	425
133-159	450 - 475	0,01mm	±9 µm	360	18	15	450
133-160	475 - 500	0,01mm	±9 µm	370	18	15	475
133-161	500 - 525	0,01mm	±9 µm	390	18	15	500
133-162	525 - 550	0,01mm	±10 µm	400	18	15	525
133-163	550 - 575	0,01mm	±10 µm	410	18	15	550
133-164	575 - 600	0,01mm	±10 µm	415	18	15	575
133-165	600 - 625	0,01mm	±11 µm	430	18	15	600
133-166	625 - 650	0,01mm	±11 µm	450	18	15	625
133-167	650 - 675	0,01mm	±11 µm	470	18	15	650
133-168	675 - 700	0,01mm	±12 µm	480	18	15	675
133-169	700 - 725	0,01mm	±12 µm	500	18	15	700
133-170	725 - 750	0,01mm	±12 µm	510	18	15	725
133-171	750 - 775	0,01mm	±13 µm	520	18	15	750
133-172	775 - 800	0,01mm	±13 µm	540	18	15	775
133-173	800 - 825	0,01mm	±13 µm	555	18	15	800
133-174	825 - 850	0,01mm	±14 µm	570	18	15	825
133-175	850 - 875	0,01mm	±14 µm	590	18	15	850
133-176	875 - 900	0,01mm	±14 µm	600	18	15	875
133-177	900 - 925	0,01mm	±15 µm	620	18	15	900
133-178	925 - 950	0,01mm	±15 µm	630	18	15	925
133-179	950 - 975	0,01mm	±15 µm	650	18	15	950
133-180	975 - 1000	0,01mm	±16 µm	670	18	15	975

Specifications

Scale	Thimble and sleeve satin chrome finish, Ø18 mm
Measuring spindle	With spindle lock (except 50-75 mm), spindle pitch 0,5 mm
Measuring face	Carbide tipped, crown lapped
Delivered	Including box, insulation (from 100 mm), key

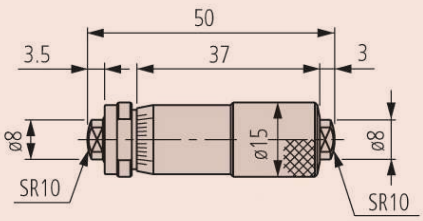

133-143

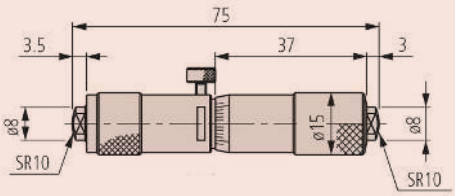

133-144

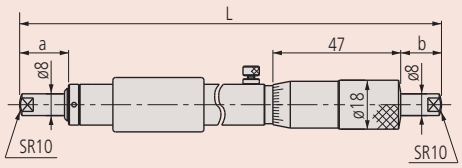

100-1000 mm

All products to be sold to commercial customers.
Product illustrations are without obligation. Product descriptions, in particular any and all technical specifications, are only binding when explicitly agreed upon.

Tubular Inside Micrometers

Specifications

Scale	Thimble and sleeve satin chrome finish, Ø18 mm
Measuring spindle	With spindle lock (except 50-75 mm), spindle pitch 0,5 mm
Measuring face	Carbide tipped, crown lapped
Delivered	Including box, insulation (from 100 mm), key

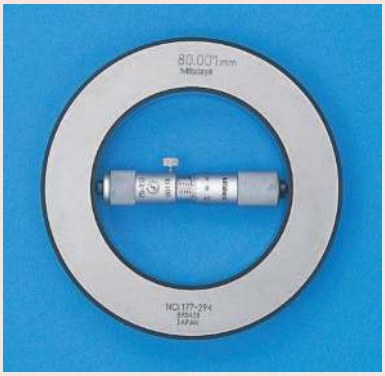

Series 133

This is a standard single rod type inside micrometer (boxed set), with the following features:

- Standard single rod.
- Carbide measuring faces.

Metric

Micrometer set

No.	Range [mm]	Graduation	Models included	Mass [g]
133-901	50 - 150	0,01mm	133-143, 133-144, 133-145, 133-146	415
133-902	50 - 300	0,01mm	133-143, 133-144, 133-145133-146 133-147, 133-148, 133-149, 133-150, 133-151, 133-152	1655

All products to be sold to commercial customers.
Product illustrations are without obligation. Product descriptions, in particular any and all technical specifications, are only binding when explicitly agreed upon.

Mitutoyo

Tubular Inside Micrometers with Extensions

Series 137

This is an extension rod type inside micrometer that offers you the following benefits:

- Interchangeable extensions with cylindrical gage rods are spring-mounted in protective sleeves so you can extend the measuring range.
- Carbide measuring faces are available.

137-205

Metric

With carbide measuring surface

No.	Range [mm]	Measuring span	Graduation	Spindle feed error	Extension rods	Mass [g]
137-206	50 - 150	13 mm	0,01 mm	3 µm	3 (13, 25, 50 mm)	145
137-207	50 - 300	13 mm	0,01 mm	3 µm	5 (13, 25, 50 (2 pcs.), 100 mm)	305
137-208	50 - 500	13 mm	0,01 mm	3 µm	6 (13, 25, 50 (2 pcs.), 100, 200 mm)	460
137-209	50 - 1000	13 mm	0,01 mm	3 µm	8 (13, 25, 50 (2 pcs.), 100, 200 (2 pcs.), 300 mm)	845
137-210	50 - 1500	13 mm	0,01 mm	3 µm	10 (13, 25, 50 (2 pcs.) 100, 200 (3 pcs.), 300 mm (2 pcs.))	1225

Metric

With hardened measuring surface

No.	Range [mm]	Measuring span	Graduation	Spindle feed error	Extension rods	Mass [g]
137-201	50 - 150	13 mm	0,01 mm	3 µm	3 (13, 25, 50 mm)	145
137-202	50 - 300	13 mm	0,01 mm	3 µm	5 (13, 25, 50 (2 pcs.), 100 mm)	305
137-203	50 - 500	13 mm	0,01 mm	3 µm	6 (13, 25, 50 (2 pcs.), 100, 200 mm)	460
137-204	50 - 1000	13 mm	0,01 mm	3 µm	8 (13, 25, 50 (2 pcs.), 100, 200 (2 pcs.), 300 mm)	845
137-205	50 - 1500	13 mm	0,01 mm	3 µm	10, 13, 25, 50 (2 pcs.), 100, 200 (3 pcs.), 300 mm (2 pcs.)	1225

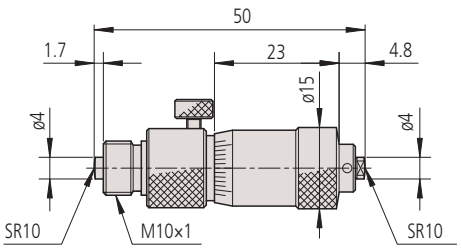

Micrometer Head for series 137

Specifications

Scale	Thimble and sleeve satin chrome finish, ø15 mm
Measuring spindle	Spindle pitch 0,5 mm
Extension	ø12,5 mm
Delivered	Including box, key, extensions, micrometer head

Optional accessories

No.	Description
137-011	Inside Micrometer, Hardened Face, 50-63mm
137-013	Inside Micrometer, Carbide-tipped, 50-63mm

Consumable spares

No.	Description
980505	Extension Rod for Series 137, 13mm, Hardened Face
980507	Extension Rod for Series 137, 25mm, Hardened Face
980509	Extension Rod for Series 137, 50mm, Hardened Face
980511	Extension Rod for Series 137, 100mm, Hardened Face
980515	Extension Rod for Series 137, 200mm, Hardened Face
980517	Extension Rod for Series 137, 300mm, Hardened Face
980519	Extension Rod for Series 137, 337, 13mm, Carbide Tipped
980521	Extension Rod for Series 137, 337, 25mm, Carbide Tipped
980523	Extension Rod for Series 137, 337, 50mm, Carbide Tipped
980525	Extension Rod for Series 137, 337, 100mm, Carbide Tipped
980529	Extension Rod for Series 137, 337, 200mm, Carbide Tipped
980531	Extension Rod for Series 137, 337, 300mm, Carbide Tipped

All products to be sold to commercial customers.
Product illustrations are without obligation. Product descriptions, in particular any and all technical specifications, are only binding when explicitly agreed upon.

Tubular Inside Micrometers with Extensions

Series 139

This is an extension pipe type inside micrometer that offers you the following benefits:

- Interchangeable extensions in a hollow pipe design.

139-177

139-001

139-005

Specifications

Scale	Thimble and sleeve satin chrome finish, ø18 mm ø13 mm (139-203, 139-204)
Measuring spindle	Spindle pitch 0,5 mm
Measuring face	Carbide
Extension	ø17 mm ø10 mm (139-203, 139-204)
Delivered	Including box, key, extensions, micrometer head

Standard accessories

No.	Description
139-001	Tubular Inside Micrometer, 100-125mm, for 139-173 to 139-177
139-003	Tubular Inside Micrometer 100-110mm, for 139-203
139-005	Tubular Inside Micrometer 100-125mm, for 139-204

Consumable spares

No.	Description
981003	Extension Rod for Series 139, 339, 25mm
981005	Extension Rod for Series 139, 339, 50mm
981007	Extension Rod for Series 139, 339, 100mm
981009	Extension Rod for Series 139, 339, 200mm
981011	Extension Rod for Series 139, 339, 400mm
981981	Extension Rod 10mm, for 139-203
981982	Extension Rod 20mm, for 139-203
981983	Extension Rod 30mm, for 139-203
981984	Extension Rod 60mm, for 139-203
981985	Extension Rod 90mm, for 139-203
981986	Extension Rod 110mm, for 139-203
981987	Extension Rod 120mm, for 139-203
981988	Extension Rod 130mm, for 139-203
981991	Extension Rod 25mm, for 139-204
981993	Extension Rod 75mm, for 139-204
981994	Extension Rod 150mm, for 139-204
981995	Extension Rod 225mm, for 139-204
981996	Extension Rod 300mm, for 139-204
981997	Extension Rod 350mm, for 139-204
981998	Extension Rod 400mm, for 139-204
981999	Extension Rod 425mm, for 139-204
982000	Extension Rod 450mm, for 139-204

Metric

No.	Range [mm]	Measuring span	Graduation	Spindle feed error	Extension rods	Mass [g]
139-173	100 - 500	25 mm	0,01 mm	3 µm	4 (25, 50, 100, 200 mm)	490
139-174	100 - 900	25 mm	0,01 mm	3 µm	5 (25, 50, 100, 200, 400 mm)	790
139-175	100 - 1300	25 mm	0,01 mm	3 µm	6 (25, 50, 100, 200, 400 mm (2 pcs.))	1090
139-176	100 - 1700	25 mm	0,01 mm	3 µm	7 (25, 50, 100, 200, 400 mm (3 pcs.))	1390
139-177	100 - 2100	25 mm	0,01 mm	3 µm	8 (25, 50, 100, 200, 400 mm (4 pcs.))	1690
139-203	40 - 300	10 mm	0,01 mm	6 µm	8 (10, 20, 30, 60, 90, 110, 120, 130 mm)	240
139-204	100 - 1000	25 mm	0,01 mm	6 µm	10 (25, 50, 75, 150, 225, 300, 350, 400, 425, 450 mm)	770

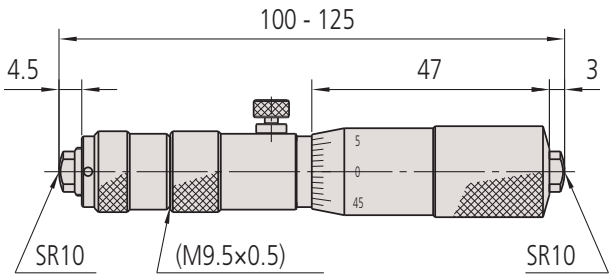

139-001

All products to be sold to commercial customers.
Product illustrations are without obligation. Product descriptions, in particular any and all technical specifications, are only binding when explicitly agreed upon.

Mitutoyo

Tubular Inside Micrometers with Extensions

Series 140

This is a long range inside micrometer that offers you the following benefits:

- It has a long measuring range of up to 5000 mm
- Extension tube type design.
- Measuring surfaces in carbide are available, micro-lap finish

140-158

Metric

No.	Range [mm]	Measuring span	Graduation	Spindle feed error	Extension rods	Mass [g]
140-157	1000 - 2000	50 mm	0,01 mm	6 µm	5 (50, 100 (2 pcs.) 200, 500 mm)	3700
140-158	1000 - 3000	50 mm	0,01 mm	6 µm	6 (50, 100 (2 pcs.), 200, 500, 1000 mm)	5200
140-159	1000 - 4000	50 mm	0,01 mm	6 µm	7 (50, 100 (2 pcs.), 200, 500, 1000 mm (2 pcs.))	6700
140-160	1000 - 5000	50 mm	0,01 mm	6 µm	8 (50, 100 (2 pcs.) 200, 500, 1000 mm (3 pcs.))	8260

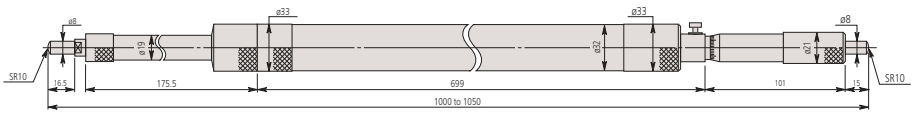

Micrometer Head for series 140

Specifications

Scale	Thimble and sleeve satin chrome finish, ø21 mm
Measuring spindle	Spindle pitch 0,5 mm
Measuring face	Carbide
Extension	ø32 mm
Delivered	Including box, key

Consumable spares

No.	Description
04GZA394	Extension Rod 50mm, for Series 140
04GZA396	Extension Rod 100mm, for Series 140
04GZA398	Extension Rod 200mm, for Series 140
04GZA400	Extension Rod 500mm, for Series 140
04GZA402	Extension Rod 1000mm, for Series 140

All products to be sold to commercial customers.
Product illustrations are without obligation. Product descriptions, in particular any and all technical specifications, are only binding when explicitly agreed upon.

Digimatic Tubular Inside Micrometers with Extensions

Functions	Series 337
ABS / INC (INC ZERO)	●
Auto Power OFF after 20 min. non use	●
Low voltage alarm	●
Function lock	●
DATA/HOLD	●
2 x PRESET	●
Data output	●

Specifications

Scale	Thimble and sleeve satin chrome finish, ø18 mm
Display	LCD, character height 7,5 mm
Measuring spindle	Spindle pitch 0,5 mm
Measuring face	Carbide
Extension	ø12,5 mm
Power supply	1 battery SR-44
Delivered	Including box, key, 1 battery, extensions, micrometer head

Standard accessories

No.	Description
337-101	Digital Tubular Inside Micrometer (Rod), 200-225mm, Digimatic, IP65

Optional accessories

No.	Description
05CZA662	Digimatic Cable with Data Button IP Type, 1m, Micrometer Type
05CZA663	Digimatic Cable with Data Button IP Type, 2m, Micrometer Type
06AFM380B	USB Input Tool Direct (Digimatic USB), Digi/Digi2, With Data Button IP Micrometer Type
02AZD880G	U-WAVE-T, Buzzer Type, Wireless Transmitter
02AZD730G	U-WAVE-T, IP67 Type, Wireless Transmitter
02AZD790B	U-WAVE-T Connection Cable B, with Data Button IP Micrometer Type

Consumable spares

No.	Description
980521	Extension Rod for Series 137, 337, 25mm, Carbide Tipped
980523	Extension Rod for Series 137, 337, 50mm, Carbide Tipped
980525	Extension Rod for Series 137, 337, 100mm, Carbide Tipped
980529	Extension Rod for Series 137, 337, 200mm, Carbide Tipped
980531	Extension Rod for Series 137, 337, 300mm, Carbide Tipped
938882	Battery SR44 1.5V

Series 337

Dust- and Waterproof IP65

This is an extension rod type inside micrometer that offers you the following benefits:

- Interchangeable extensions with cylindrical gage rods are spring-mounted in protective sleeves so you can extend the measuring range.
- Carbide measuring faces.
- Digimatic type, with data output.
- It has excellent resistance against water and dust (IP65 protection level) enabling you to use it in machining situations that include splashing coolant fluid.

337-301

Metric

No.	Range [mm]	Measuring span	Digital step	Spindle feed error	Extension rods	Mass [g]
337-301	200 - 1000	25 mm	0,001 mm	3 µm	6 (25, 50, 100 (2 pcs.), 200, 300 mm)	1040
337-302	200 - 1500	25 mm	0,001 mm	3 µm	7 (25, 50, 100, 200, 300 (3 pcs.))	1410

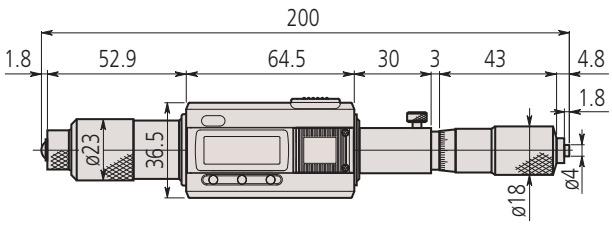

Micrometer Head for series 337

All products to be sold to commercial customers.
Product illustrations are without obligation. Product descriptions, in particular any and all technical specifications, are only binding when explicitly agreed upon.

Digimatic Tubular Inside Micrometers with Extensions

Series 339

This is an extension pipe type inside micrometer that offers you the following benefits:

- Interchangeable extensions in a hollow pipe design.
- Carbide measuring faces.
- Digimatic type with data output.
- It has excellent resistance against water and dust (IP65 protection level) enabling you to use it in machining situations that include splashing coolant fluid.

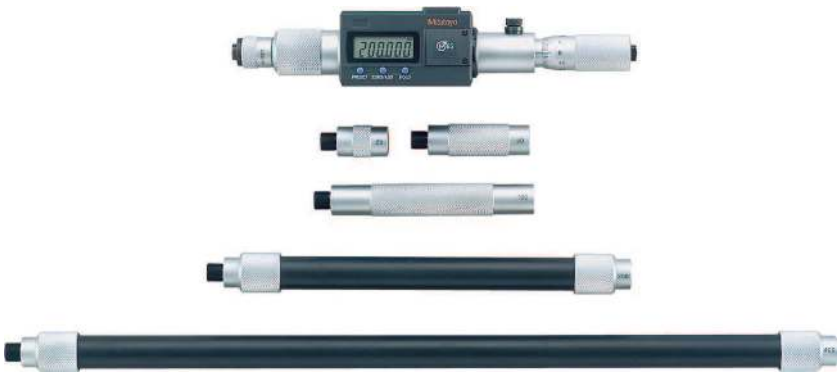

339-301

Metric

No.	Range [mm]	Measuring span	Digital step	Spindle feed error	Extension rods	Mass [g]
339-301	200 - 1000	25 mm	0,001 mm	3 µm	5 (25, 50, 100, 200, 400 mm)	1050
339-302	200 - 2000	25 mm	0,001 mm	3 µm	8 (25, 50, 100, 200 (2 pcs.), 400 mm (3 pcs.))	1800

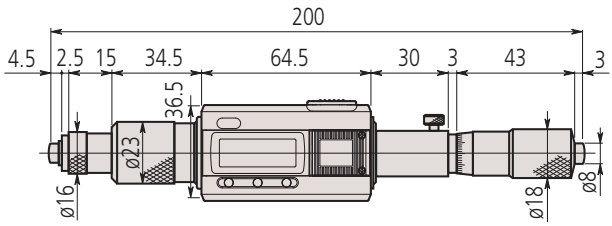

Micrometer Head for series 339

Functions	Series 339
ABS / INC (INC ZERO)	●
Auto Power OFF after 20 min. non use	●
Low voltage alarm	●
Function lock	●
DATA/HOLD	●
2 x PRESET	●
Data output	●

Specifications

Scale	Thimble and sleeve satin chrome finish, ø18 mm
Display	LCD, character height 7,5 mm
Measuring spindle	Spindle pitch 0,5 mm
Measuring face	Carbide
Extension	ø17 mm
Power supply	1 battery SR-44
Delivered	Including box, key, 1 battery, extensions, micrometer head

Standard accessories

No.	Description
339-101	Digital Tubular Inside Micrometer (Pipe), 200-225mm, IP65

Optional accessories

No.	Description
05CZA662	Digimatic Cable with Data Button IP Type, 1m, Micrometer Type
05CZA663	Digimatic Cable with Data Button IP Type, 2m, Micrometer Type
06AFM380B	USB Input Tool Direct (Digimatic USB), Digi/Digi2, With Data Button IP Micrometer Type
02AZD880G	U-WAVE-T, Buzzer Type, Wireless Transmitter
02AZD730G	U-WAVE-T, IP67 Type, Wireless Transmitter
02AZD790B	U-WAVE-T Connection Cable B, with Data Button IP Micrometer Type

Consumable spares

No.	Description
938882	Battery SR44 1.5V
981003	Extension Rod for Series 139, 339, 25mm
981005	Extension Rod for Series 139, 339, 50mm
981007	Extension Rod for Series 139, 339, 100mm
981009	Extension Rod for Series 139, 339, 200mm
981011	Extension Rod for Series 139, 339, 400mm

All products to be sold to commercial customers.
Product illustrations are without obligation. Product descriptions, in particular any and all technical specifications, are only binding when explicitly agreed upon.

Inside Micrometers with Interchangeable Rod

Series 141 - Interchangeable Rod Type

This an interchangeable rod type inside micrometer that offers you the following benefits:

- Interchangeable measuring rods and spacers achieve the full specified measuring range.
- Each interchangeable rod is marked with its measuring range.
- An extension handle to help you measure deep bores is included in sets up to 300 mm range.

Specifications

Scale	Thimble and sleeve satin chrome finish
Measuring spindle	Spindle pitch 0,5 mm with spindle lock
Measuring face	Hardened or carbide tipped
Delivered	Including box, key

When using one of the extension rods supplied

141-101 with extensionl handle

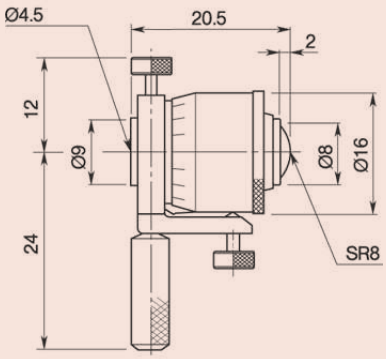

141-001, 141-003

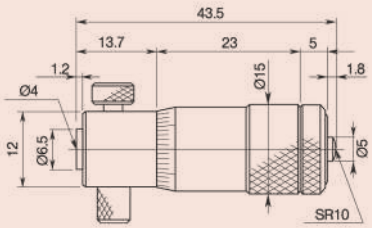

141-025, 141-027

141-205

Metric — With carbide measuring surface

No.	Range [mm]	Measuring span	Graduation	Spindle feed error	Interchangeable rod	Extension collar	Accessories: inside micrometer (standard in the set) No.	Mass [g]
141-103	25 - 50	7 mm	0,01 mm	3 µm	2 (38, 50 mm)	1 (6 mm)	141-003	60
141-211	50 - 200	13 mm	0,01 mm	3 µm	3 (100, 150, 200 mm)	1 (12 mm)	141-027	125
141-212	50 - 300	13 mm	0,01 mm	3 µm	5 (100, 150, 200, 250, 300 mm)	1 (12 mm)	141-027	275

Metric — With hardened steel measuring surface

No.	Range [mm]	Measuring span	Graduation	Spindle feed error	Interchangeable rod	Extension collar	Accessories: inside micrometer (standard in the set) No.	Mass [g]
141-101	25 - 50	7 mm	0,01 mm	3 µm	2 (38, 50 mm)	1 (6 mm)	141-001	60
141-205	50 - 200	13 mm	0,01 mm	3 µm	3 (100, 150, 200 mm)	1 (12 mm)	141-025	125
141-206	50 - 300	13 mm	0,01 mm	3 µm	5 (100, 150, 200, 250, 300 mm)	1 (12 mm)	141-025	275
141-117	200 - 500	25 mm	0,01 mm	3 µm	3 (300, 400, 500 mm)	2 (25/50 mm)	141-009	520
141-118	200 - 1000	25 mm	0,01 mm	3 µm	8 (300, 400, 500, 600, 700, 800, 900, 1000 mm)	2 (25/50 mm)	141-009	1940

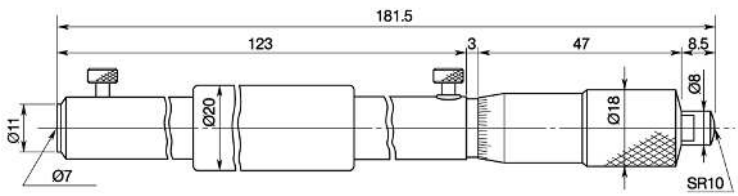

141-009

All products to be sold to commercial customers.
Product illustrations are without obligation. Product descriptions, in particular any and all technical specifications, are only binding when explicitly agreed upon.

Mitutoyo

Bore Gauges for Extra Small Holes

Series 526 Bore Gauge

This is a two point split contact point ideally suited to smaller bore measurements.
It offers you the following benefits:

- A precision bore gauge so you can make quick and accurate measurements of small hole diameters (0,95-18 mm).
- You can replace the analogue indicator fitted to this instrument with a customer-supplied Digimatic indicator if you need.
- The contact point is hard chrome finish

526-126-20

526-172-20

Metric

No.	Range [mm]	Graduation	Accuracy	Repeatability	Number of anvils	Measuring depth	No. Dial Indicator
526-173-20	0.95 - 1.55	0,01mm	4 µm	2 µm	5	11,5 mm	2046AB
526-163-20	1.5 - 4	0,01mm	4 µm	2 µm	9	17,5-22,5 mm (1)	2046AB
526-153-20	3.7 - 7.3	0,01mm	4 µm	2 µm	7	32 mm	2046AB
526-126-20	7 - 10	0,01mm	4 µm	2 µm	6	40-56 mm (2)	2046AB
526-127-20	10 - 18	0,01mm	6 µm	2 µm	8	62 mm	2046AB
526-172-20	0.95 - 1.55	0,001mm	4 µm	2 µm	5	11,5 mm	2109AB-10
526-162-20	1.5 - 4	0,001mm	4 µm	2 µm	9	17,5-22,5 mm (1)	2109AB-10
526-152-20	3.7 - 7.3	0,001mm	4 µm	2 µm	7	32 mm	2109AB-10
526-124-20	7 - 10	0,001mm	4 µm	2 µm	6	40-56 mm (2)	2109AB-10
526-125-20	10 - 18	0,001mm	6 µm	2 µm	8	62 mm	2109AB-10

(1) Holes Ø ≤ 2,25 mm : measuring depth 17,5 mm / holes Ø > 2,25 mm : measuring depth 22,5 mm
(2) Holes Ø ≤ 8 mm : measuring depth 40 mm / holes Ø > 8 mm : measuring depth 56 mm

Specifications

Delivered	In box including plastic cover for Dial Indicator

Optional accessories

No.	Description
215-120-10	Stand for Bore Gauge Series 526
543-310B	Digital Indicator Bore Gauge ID-C, 12,7mm, 0,001mm, Flat Back
21AZB195	Limit Hands (green) 2pcs, Dial Indicator Series 2/3/4

Setting rings are optional accessories. See Series 177 for details.

215-120-10

543-310B

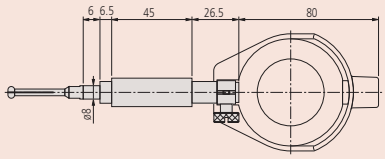

0,95 - 4 mm

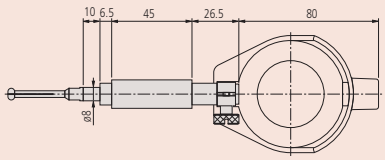

3,7 - 7,3 mm

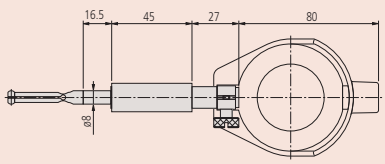

7 - 18 mm

For details on indicators suitable for use with this instrument, refer to Dial Gauges section.

All products to be sold to commercial customers.
Product illustrations are without obligation. Product descriptions, in particular any and all technical specifications, are only binding when explicitly agreed upon.

Bore Gauges for Extra Small Holes

526-153-20

Contact Point for Series 526

Split-Ball Contact Points for Series 526
- Hard chrome plated

Replacement contact points

No.	Range [mm]	Marking on the measuring head (engraved)	A [mm]	B [mm]	C [mm]
21DAA601A	0.95 - 1.15	1	11,5		
21DAA601B	1.07 - 1.25	1,1	11,5		
21DAA601C	1.17 - 1.35	1,2	11,5		
21DAA601D	1.27 - 1.45	1,3	11,5		
21DAA601E	1.37 - 1.55	1,4	11,5		
21DAA602A	1.5 - 1.9	1,75	17,5		
21DAA602B	1.8 - 2.2	2	17,5		
21DAA602C	2.05 - 2.45	2,25	17,5		
21DAA602D	2.25 - 2.75	2,5	22,5		
21DAA602E	2.5 - 3	2,75	22,5		
21DAA602F	2.75 - 3.25	3	22,5		
21DAA602G	3 - 3.5	3,25	22,5		
21DAA602H	3.25 - 3.75	3,5	22,5		
21DAA602J	3.5 - 4	3,75	22,5		
21DAA603A	3.7 - 4.3	4	32		
21DAA603B	4.2 - 4.8	4,5	32		
21DAA603C	4.7 - 5.3	5	32		
21DAA603D	5.2 - 5.8	5,5	32		
21DAA603E	5.7 - 6.3	6	32		
21DAA603F	6.2 - 6.8	6,5	32		
21DAA603G	6.7 - 7.3	7	32		
102469	7 - 7.5	1	1,8	40	29,2
102470	7.5 - 8	2	1,8	40	29,2
102471	8 - 8.5	3	1,8	40	29,2
102472	8.5 - 9	4	1,8	40	29,2
102473	9 - 9.5	5	1,8	40	29,2
102474	9.5 - 10	6	1,8	40	29,2
102454	10 - 11	1	2,1	46	38
102455	11 - 12	2	2,7	46	38
102456	12 - 13	3	2,7	46	38
102457	13 - 14	4	2,7	46	38
102458	14 - 15	5	2,7	46	38
102459	15 - 16	6	2,7	46	38
102460	16 - 17	7	2,7	46	38
102461	17 - 18	8	2,7	46	38

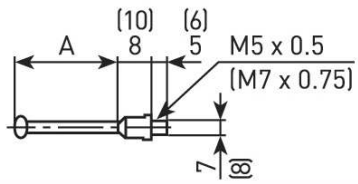

526-162-20, 526-163-20, 526-172-20, 526-173-20
( ) 526-152-20, 526-153-20

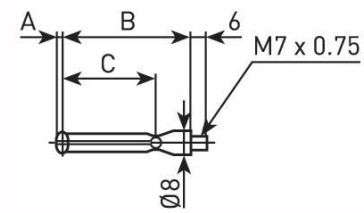

526-124-20, 526-125-20, 526-126-20, 526-127-20

All products to be sold to commercial customers.
Product illustrations are without obligation. Product descriptions, in particular any and all technical specifications, are only binding when explicitly agreed upon.

Bore Gauges for Small Holes

Series 511

These are bore gauges that automatically self-centre via a centring bridge.
They offer you the following benefits:

- A long plunger stroke gives you amazing accuracy.
- Interchangeable washers 0,5mm thick are supplied as standard accessories, so you can enable setting in small steps.
- Contact points are carbide (>18 mm range), giving you high durability and wear resistance.
- A large grip reduces heat transfer from the operator by 50%.

511-204-20

6 - 10mm

10 - 18.5mm

Metric

No.	Range [mm]	Graduation	Stroke of contact point [mm]	Number of anvils	Measuring depth	No. Dial Indicator	Mass [g]
511-211-20	6 - 10	0,01 mm	0,5	9	50 mm	2046AB	255
511-204-20	10 - 18.5	0,01 mm	0,6	9	100 mm	2046AB	264
511-210-20	6 - 10	0,001 mm	0,5	9	50 mm	2109AB-10	255
511-203-20	10 - 18.5	0,001 mm	0,6	9	100 mm	2109AB-10	268

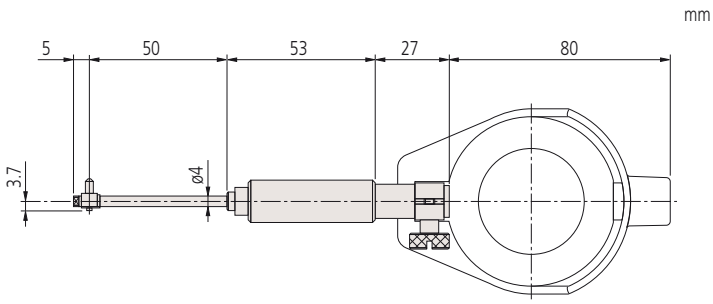

6-10 mm

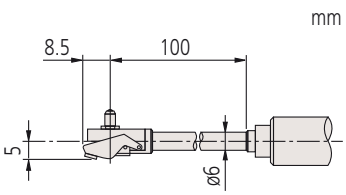

10-18,5 mm

Specifications

Accuracy	5 µm
Repeatability	2 µm
Delivered	Including box, dial indicator, plastic cover for indicator

Optional accessories

No.	Description
543-310B	Digital Indicator Bore Gauge ID-C, 12,7mm, 0,001mm, Flat Back
21AZB195	Limit Hands (green) 2pcs, Dial Indicator Series 2/3/4

543-310B

For details on indicators suitable for use with this instrument, refer to the Dial Gauges section.

All products to be sold to commercial customers.
Product illustrations are without obligation. Product descriptions, in particular any and all technical specifications, are only binding when explicitly agreed upon.

Bore Gauges

Series 511

This is a short range application Bore Gauge Set that automatically self-centres via a centring bridge and offers you the following benefits:

- It reduces the influence of heat from the operator's hand by 50% by making the grip hollow structured, thereby retaining high accuracy measurement.
- Interchangeable washers (0,5 mm thick) are supplied as standard accessories, so you can enable setting in small steps.
- Contact points are carbide (>18 mm range), giving you high durability and wear resistance.

511-712-20

511-713-20

Extensions for deep-hole measurement (optional accessory)

Specifications

Accuracy	2 µm
Repeatability	0,5 µm
Delivered	Including box, dial indicator, plastic cover for indicator

Optional accessories

No.	Description
953549	Extension Rod Series 511, 125mm, 9mm Rod Diameter
953550	Extension Rod Series 511, 250mm, 9mm Rod Diameter
953551	Extension Rod Series 511, 500mm, 9mm Rod Diameter
953552	Extension Rod Series 511, 125mm, 12mm Rod Diameter
953553	Extension Rod Series 511, 250mm, 12mm Rod Diameter
953554	Extension Rod Series 511, 500mm, 12mm Rod Diameter
953555	Extension Rod Series 511, 750mm, 12mm Rod Diameter
953556	Extension Rod Series 511, 1000mm, 12mm Rod Diameter
953557	Extension Rod Series 511, 125mm, 15mm Rod Diameter
952361	Extension Rod Series 511, 250mm, 15mm Rod Diameter
953558	Extension Rod Series 511, 500mm, 15mm Rod Diameter
953559	Extension Rod Series 511, 750mm, 15mm Rod Diameter
953560	Extension Rod Series 511, 1000mm, 15mm Rod Diameter
543-310B	Digital Indicator Bore Gauge ID-C, 12,7mm, 0,001mm, Flat Back
21AZB195	Limit Hands (green) 2pcs, Dial Indicator Series 2/3/4

For details on indicators suitable for use with this instrument, refer to the Dial Gauges section.

Metric

No.	Range [mm]	Graduation	Stroke of contact point	Number of anvils	Measuring depth	No. Dial Indicator	Mass [g]
511-721-20	18 - 35	0,001 mm	1,2 mm	9	100 mm	2109AB-10	330
511-722-20	35 - 60	0,001 mm	1,2 mm	6	150 mm	2109AB-10	400
511-723-20	50 - 150	0,001 mm	1,6 mm	11	150 mm	2109AB-10	420
511-724-20	100 - 160	0,001 mm	1,6 mm	13	150 mm	2109AB-10	480
511-725-20	160 - 250	0,001 mm	1,6 mm	6	250 mm	2109AB-10	850
511-726-20	250 - 400	0,001 mm	1,6 mm	5	250 mm	2109AB-10	945
511-711-20	18 - 35	0,01 mm	1,2 mm	9	100 mm	2046AB	330
511-712-20	35 - 60	0,01 mm	1,2 mm	6	150 mm	2046AB	400
511-713-20	50 - 150	0,01 mm	1,6 mm	11	150 mm	2046AB	420
511-714-20	100 - 160	0,01 mm	1,6 mm	13	150 mm	2046AB	480
511-715-20	160 - 250	0,01 mm	1,6 mm	6	250 mm	2046AB	850
511-716-20	250 - 400	0,01 mm	1,6 mm	5	250 mm	2046AB	945

All products to be sold to commercial customers.
Product illustrations are without obligation. Product descriptions, in particular any and all technical specifications, are only binding when explicitly agreed upon.

Mitutoyo

Bore Gauges

Series 511

Example of measuring heads with different measuring ranges.

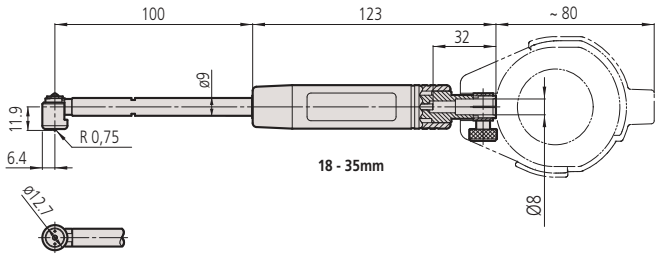

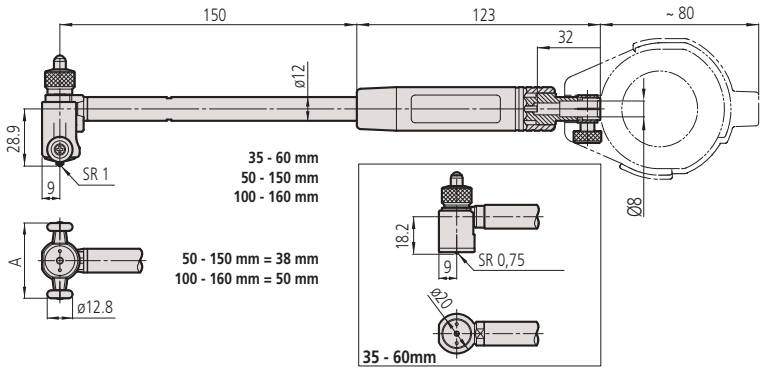

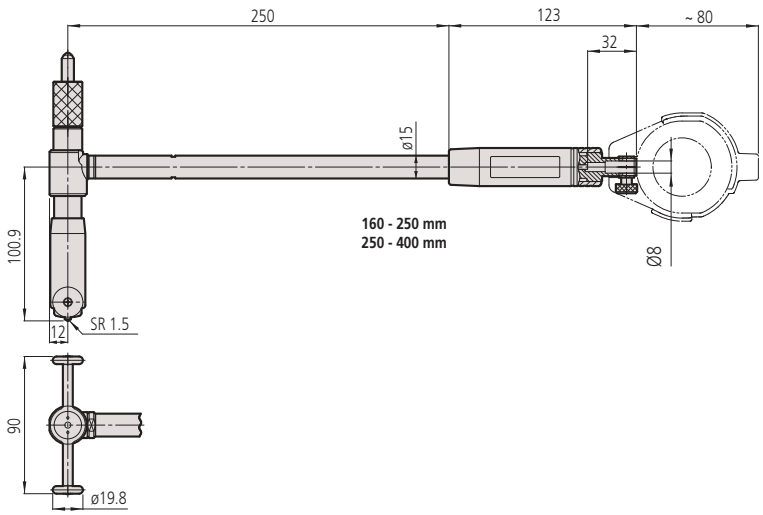

All products to be sold to commercial customers.
Product illustrations are without obligation. Product descriptions, in particular any and all technical specifications, are only binding when explicitly agreed upon.

Bore Gauges

Series 511

This is a wide range application set of Bore Gauges that automatically self-centres via a centring bridge and offers you the following benefits:

- Carbide for the contact point ensuring high durability and wear resistance
- It reduces the influence of heat from the operator's hand by 50% by making the grip hollow structured, thereby retaining high accuracy measurement.

Specifications

Accuracy	2 µm
Repeatability	0,5 µm
Delivered	Including box, dial indicator, plastic cover for indicator

Standard accessories

No.	Description
205457	Washer Series 511, 0,5mm, Range 35-160mm
205458	Washer Series 511, 1 mm, Range 35-160mm
205459	Washer Series 511, 2 mm, Range 35-160mm
205460	Washer Series 511, 3 mm, Range 35-160mm
205623	Washer Series 511, 0,5mm, Range 18-35mm
205624	Washer Series 511, 1mm, Range 18-35mm

Optional accessories

No.	Description
21AZB195	Limit Hands (green) 2pcs, Dial Indicator Series 2/3/4

511-921-20
with optional limit hands (green)

Indicator 2046AB included in the set 511-921-20

Indicator 2109AB-10 included in the set 511-922-20

Indicator 543-310B included in the set 511-925-10

Metric

No.	Range [mm]	Graduation	Measuring depth	No. Dial Indicator
511-921-20	18 - 150	0,01 mm	100/150 mm	2046AB
511-922-20	18 - 150	0,001 mm	100/150 mm	2109AB-10
511-925-10	18 - 150	0,001 mm	100/150 mm	543-310B

All products to be sold to commercial customers.
Product illustrations are without obligation. Product descriptions, in particular any and all technical specifications, are only binding when explicitly agreed upon.

Mitutoyo

Bore Gauges with Micrometer Head

Series 511

This is a micrometer head that enables measurements without interchangeable anvils.
It offers you the following benefits:

- A long plunger stroke gives you amazing accuracy.
- Contact points are carbide (>18 mm range), giving you high durability and wear resistance.
- A large grip reduces heat transfer from the operator by 50%.
- Wide measuring range with sub-anvils.

511-814-20
with optional limit hands (green)

Extensions for deep-hole measurement
(optional accessory)

Metric

No.	Range [mm]	Graduation	Micrometer Head stroke	Sub anvils	Measuring depth	No. Dial Indicator	Mass [g]
511-823-20	60 - 100	0,001 mm	10 mm	10, 20 mm	150 mm	2109AB-10	430
511-824-20	100 - 160	0,001 mm	13 mm	10, 20, 20 mm	150 mm	2109AB-10	480
511-825-20	150 - 250	0,001 mm	13 mm	10, 20, 20, 50 mm	150 mm	2109AB-10	850
511-826-20	250 - 400	0,001 mm	25 mm	25, 50, 50 mm	150 mm	2109AB-10	950
511-827-20	400 - 600	0,001 mm	50 mm	50, 100 mm	250 mm	2109AB-10	1270
511-828-20	600 - 800	0,001 mm	50 mm	50, 100 mm	250 mm	2109AB-10	1670
511-813-20	60 - 100	0,01 mm	10 mm	10, 20 mm	150 mm	2046AB	430
511-814-20	100 - 160	0,01 mm	13 mm	10, 20, 20 mm	150 mm	2046AB	480
511-815-20	150 - 250	0,01 mm	13 mm	10, 20, 20, 50 mm	150 mm	2046AB	850
511-816-20	250 - 400	0,01 mm	25 mm	25, 50, 50 mm	150 mm	2046AB	950
511-817-20	400 - 600	0,01 mm	50 mm	50, 100 mm	250 mm	2046AB	1270
511-818-20	600 - 800	0,01 mm	50 mm	50, 100 mm	250 mm	2046AB	1670

Specifications

Accuracy	2 µm
Repeatability	0,5 µm
Delivered	Including box, dial indicator, plastic cover for indicator

Optional accessories

No.	Description
953552	Extension Rod Series 511, 125mm, 12mm Rod Diameter
953553	Extension Rod Series 511, 250mm, 12mm Rod Diameter
953554	Extension Rod Series 511, 500mm, 12mm Rod Diameter
953555	Extension Rod Series 511, 750mm, 12mm Rod Diameter
953556	Extension Rod Series 511, 1000mm, 12mm Rod Diameter
953557	Extension Rod Series 511, 125mm, 15mm Rod Diameter
952361	Extension Rod Series 511, 250mm, 15mm Rod Diameter
953558	Extension Rod Series 511, 500mm, 15mm Rod Diameter
953559	Extension Rod Series 511, 750mm, 15mm Rod Diameter
953560	Extension Rod Series 511, 1000mm, 15mm Rod Diameter
543-310B	Digital Indicator Bore Gauge ID-C, 12,7mm, 0,001mm, Flat Back
21AZB195	Limit Hands (green) 2pcs, Dial Indicator Series 2/3/4

543-310B

For details on indicators suitable for use with this instrument, refer to the Dial Gauges section.

All products to be sold to commercial customers.
Product illustrations are without obligation. Product descriptions, in particular any and all technical specifications, are only binding when explicitly agreed upon.

Bore Gauges with Micrometer Head

Series 511

Dimensions

60 - 100 mm

100 - 160 mm

150 - 250 mm

250 - 400 mm

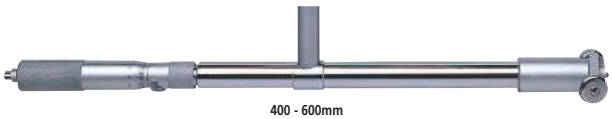

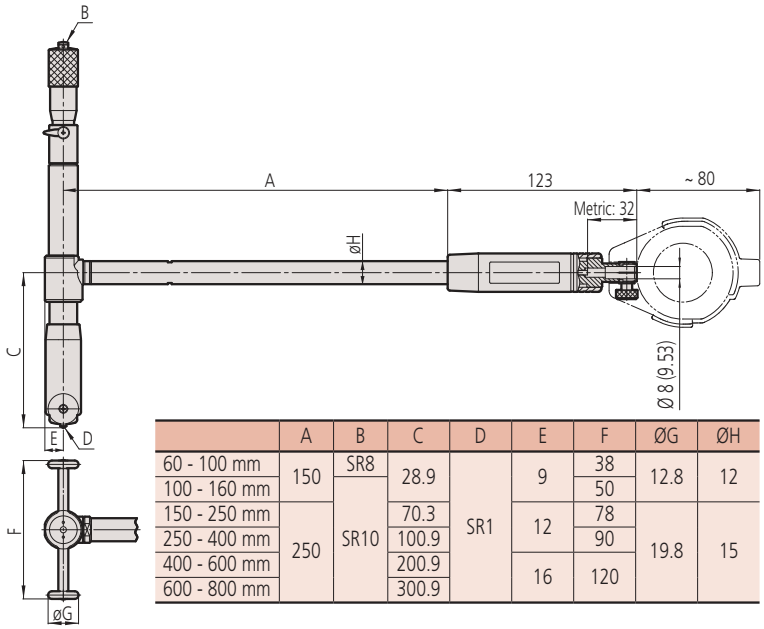

	A	B	C	D	E	F	ØG	ØH
60 - 100 mm	150	SR8	28.9	SR1	9	38	12.8	12
100 - 160 mm						50		
150 - 250 mm	250	SR10	70.3		12	78	19.8	15
250 - 400 mm			100.9			90		
400 - 600 mm			200.9		16	120		
600 - 800 mm			300.9					

Extension Rods

953549

953552

953557

Accessories for Bore Gauges

These extension rods help you with deep-hole measurement, and offer you the following benefits:

- Using a single, longer extension rod rather than several short ones reduces error. When several extension rods are joined together there is the possibility of small errors arising from the extra joints involved. Therefore it is good practice not to connect more than 2 rods to a bore gauge at any one time.
- If you are using an extension rod longer than 500mm, use the bore gauge in the vertical orientation.

No.	Length [mm]	Applicable Range	Extension rod diameter
953549	125	18-35 mm	9 mm
953550	250	18-35 mm	9 mm
953551	500	18-35 mm	9 mm
953552	125	35-160 mm	12 mm
953553	250	35-160 mm	12 mm
953554	500	35-160 mm	12 mm
953555	750	35-160 mm	12 mm
953556	1000	35-160 mm	12 mm
953557	125	150-800 mm	15 mm
952361	250	150-800 mm	15 mm
953558	500	150-800 mm	15 mm
953559	750	150-800 mm	15 mm
953560	1000	150-800 mm	15 mm

All products to be sold to commercial customers.
Product illustrations are without obligation. Product descriptions, in particular any and all technical specifications, are only binding when explicitly agreed upon.

Mitutoyo

Bore Gauges Short Length Type

Series 511

This is a compact and lightweight bore gauge due to the short length below the grip.
It offers you the following benefits:

- A long plunger stroke gives you amazing accuracy.
- Contact points are carbide giving you high durability and wear resistance.
- A large grip reduces heat transfer from the operator by 50%.

511-766-20

Metric

No.	Range [mm]	Graduation	Stroke of contact point	Number of anvils	Measuring depth	No. Dial Indicator	Mass [g]
511-771-20	18 - 35	0,001 mm	1,2 mm	9	50 mm	2109AB-10	320
511-772-20	35 - 60	0,001 mm	1,2 mm	6	50 mm	2109AB-10	380
511-773-20	50 - 150	0,001 mm	1,6 mm	11	50 mm	2109AB-10	400
511-774-20	100 - 160	0,001 mm	1,6 mm	13	50 mm	2109AB-10	460
511-766-20	18 - 35	0,01 mm	1,2 mm	9	50 mm	2046AB	320
511-767-20	35 - 60	0,01 mm	1,2 mm	6	50 mm	2046AB	380
511-768-20	50 - 150	0,01 mm	1,6 mm	11	50 mm	2046AB	400
511-769-20	100 - 160	0,01 mm	1,6 mm	13	50 mm	2046AB	460

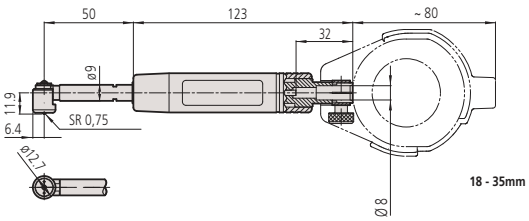

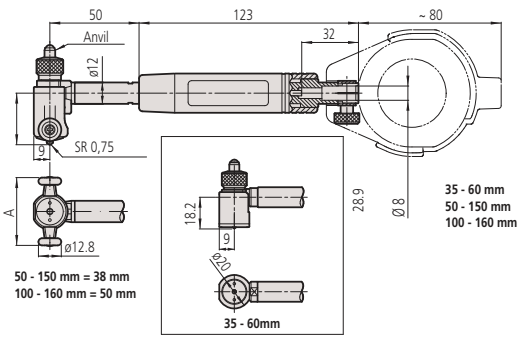

Specifications

Accuracy	2 µm
Repeatability	0,5 µm
Delivered	Including box, dial indicator, plastic cover for indicator

Optional accessories

No.	Description
543-310B	Digital Indicator Bore Gauge ID-C, 12,7mm, 0,001mm, Flat Back
21AZB195	Limit Hands (green) 2pcs, Dial Indicator Series 2/3/4

543-310B

For details of indicators suitable for use with this instrument, refer to the Dial Gauges section.

All products to be sold to commercial customers.
Product illustrations are without obligation. Product descriptions, in particular any and all technical specifications, are only binding when explicitly agreed upon.

Bore Gauges for Blind Holes

Series 511

This is a bore gauge for measuring blind holes that offers you the following benefits:
- You can measure the inside diameter close to the bottom of blind holes.
- Contact points are carbide giving you high durability and wear resistance.

Specifications

Accuracy	4 µm
Repeatability	1 µm
Delivered	Including box, dial indicator, plastic cover for indicator

Optional accessories

No.	Description
953549	Extension Rod Series 511, 125mm, 9mm Rod Diameter
543-310B	Digital Indicator Bore Gauge ID-C, 12,7mm, 0,001mm, Flat Back
953550	Extension Rod Series 511, 250mm, 9mm Rod Diameter
953551	Extension Rod Series 511, 500mm, 9mm Rod Diameter

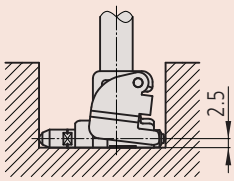

For blind holes with minimum depth 2,5 mm

15 - 35 mm

35 - 60 mm

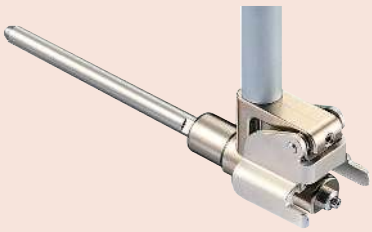

50 - 150 mm

For details on indicators suitable for use with this instrument, refer to the Dial Gauges section.

511-427-20
with optional limit hands (green)

Metric

No.	Range [mm]	Graduation	Stroke of contact point	Measuring depth	No. Dial Indicator	Mass [g]	a [mm]	b [mm]
511-425-20	15 - 35	0,01 mm	1,2 mm	150 mm	2046AB	350	9,9	10,6
511-426-20	35 - 60	0,01 mm	1,2 mm	150 mm	2046AB	370	14,3	18
511-427-20	50 - 150	0,01 mm	1,2 mm	150 mm	2046AB	380	22,7	22
511-435-20	15 - 35	0,001 mm	1,2 mm	150 mm	2109AB	350	9,9	10,6
511-436-20	35 - 60	0,001 mm	1,2 mm	150 mm	2109AB	370	14,3	18
511-437-20	50 - 150	0,001 mm	1,2 mm	150 mm	2109AB	380	22,7	22

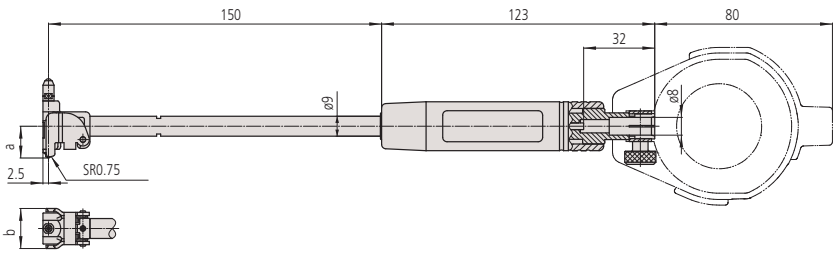

All products to be sold to commercial customers.
Product illustrations are without obligation. Product descriptions, in particular any and all technical specifications, are only binding when explicitly agreed upon.

Mitutoyo

ABSOLUTE Digimatic Bore Gauges

Series 511

ABSOLUTE®
IP53

This is a Digimatic bore gauge that lets you take digital inside measurements with amazing accuracy even at the maximum 2m depth.
The ABSOLUTE Digimatic Bore Gauge offers you the following benefits:

- Precision bore gauge lets you easily measure the diameter of deep bores without loss of accuracy.
- You can store and recall up to 3 sets of master values and upper/lower tolerance values at the push of a button.
- GO/±NG judgement can be set.
- Up to max. four extension rods (250 or 500mm) can be used.

511-501

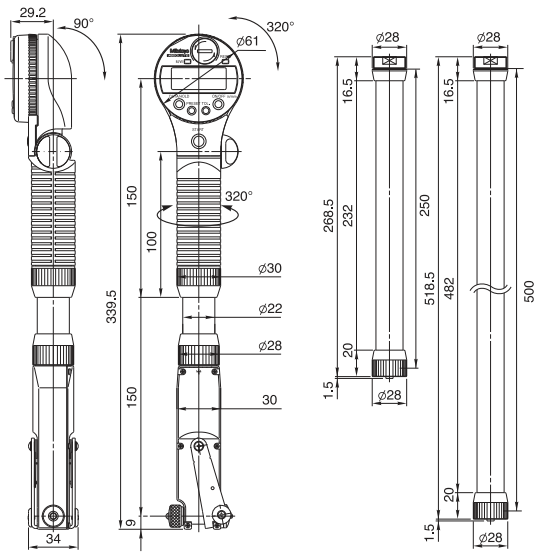

Metric

No.	Range [mm]	Digital step	Stroke of contact point	Number of anvils	Mass [g]
511-501	45 - 100	0,001 mm	1,2 mm	12	500
511-502	100 - 160	0,001 mm	1,2 mm	13	570

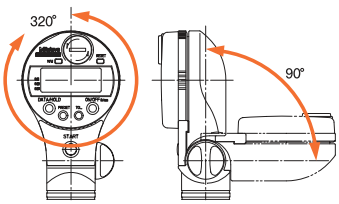

The display can be rotated 320° and turned 90°. The handle can also be rotated 320°.

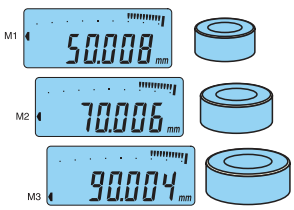

Up to 3 sets of reference values can be preset, including top/bottom tolerance limits.

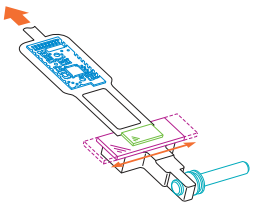

Even during measurement with a 2 m extension the accuracy is secured, as measured-value transmission is electronic.

Functions	Series 511
ON/OFF	●
DATA (output with cable) / HOLD (display value)	●
PRESET 3x	●
MIN Value Hold	●
GO/±NG judgement	●

Specifications

Accuracy	0,003 mm (excluding quantizing error)
Repeatability	0,002 mm
Display	LCD Character Height 7,5 mm
Measuring force	≤5 N
Sampling Frequency	50 times/sec*
Power supply	2 batteries SR-44
Battery life	2000 hours

Optional accessories

No.	Description
905338	Digimatic Cable, Flat Straight Type, 1m
905409	Digimatic Cable, Flat Straight Type, 2m
06AFM380F	USB Input Tool Direct (Digimatic USB), Digi/Digi2, Flat Straight Type
02AZD880G	U-WAVE-T, Buzzer Type, Wireless Transmitter
02AZD730G	U-WAVE-T, IP67 Type, Wireless Transmitter
02AZD790F	U-WAVE-T Connection Cable F, Flat Straight Type
21DZA089	Extension Rod, Series 511, 250mm
21DZA081	Extension Rod, Series 511, 500mm

Consumable spares

No.	Description
938882	Battery SR44 1.5V

The ABSOLUTE Digimatic Bore Gauge detects the minimum value (true diameter) and holds it automatically.

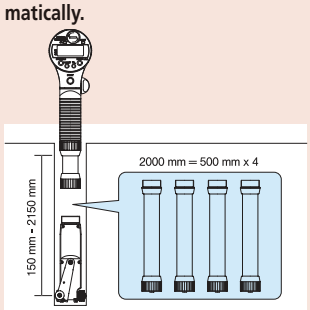

Four extension rods (500 mm each) connected together provide a 2 m extension.

*if the detecting speed is >50 µm/s the peak value may not be displayed correctly

All products to be sold to commercial customers.
Product illustrations are without obligation. Product descriptions, in particular any and all technical specifications, are only binding when explicitly agreed upon.

Bore Gauge Checker

Series 515

- For setting 2-point bore gauges series 511.
- The Bore Gauge Checker allows easy setting of dial bore gauges with ranges of 18 mm through 400 mm using gauge blocks.

Specifications

Delivered	Delivery as complete set in soft box

Standard accessories

No.	Description
940088	Receiver for Bore Gauge Checker, 18-35mm/35-60mm
940089	Receiver for Bore Gauge Checker, 50-100mm/100-160mm
940090	Receiver for Bore Gauge Checker, 100-250mm/250-400mm
630030	Flat Jaws for Bore Gauge Checker, 2 pcs.

515-590
+ gauge block (optional)

Metric

No.	Applicable Range	Mass [kg]
515-590	18-400 mm	4.51

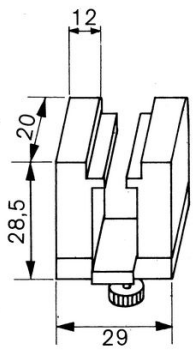

940088

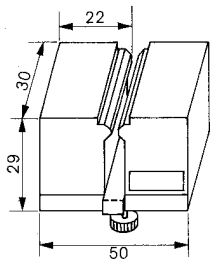

940089

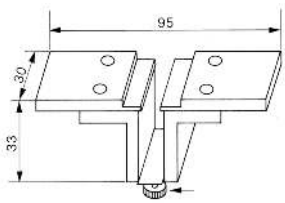

940090

All products to be sold to commercial customers.
Product illustrations are without obligation. Product descriptions, in particular any and all technical specifications, are only binding when explicitly agreed upon.

Mitutoyo

Gauge Sets

Series 155 - Telescopic Gauge Set

- Self-centering and satin chrome finish.
- Constant spring force on to the measuring surface. Locked in position by knurled lockscrew.

155-905

Metric

No.	Range	Gauges included	a [mm]	b [mm]	c [mm]	d [mm]	Mass [g]
155-905	8-12,7 mm	155-127	110	4	3	5	15
	12,7-19 mm	155-128	110	5	3,5	5,5	25
	19-32 mm	155-129	110	5	3,5	5,5	35
	32-54 mm	155-130	150	7,5	6	8	75
	54-90 mm	155-131	150	7,5	6	8	80
	90-150 mm	155-132	150	7,5	6	8	100

Specifications

Delivered	Including plastic wallet

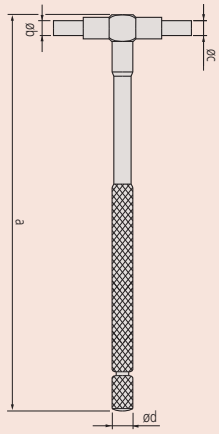

All products to be sold to commercial customers.
Product illustrations are without obligation. Product descriptions, in particular any and all technical specifications, are only binding when explicitly agreed upon.

Setting Rings

Series 177

Specifications

Cylindricity	1 µm for ø1-60 mm 1,5 µm for ø62-90 mm 2 µm for ø100-150 mm 2,5 µm for ø175-225 mm 3 µm for ø250-300 mm

177-424

177-139

177-432

177-300

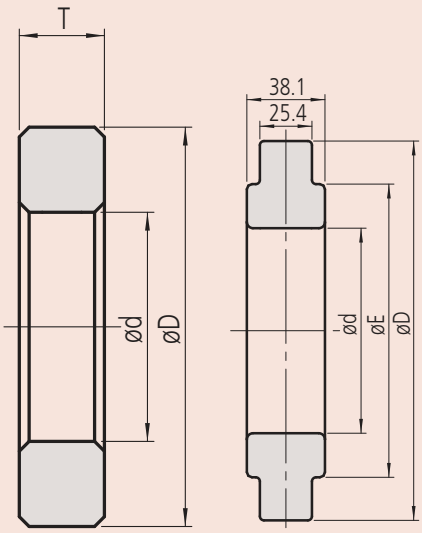

Type A Type B

Tolerance from nominal diameter is ±0,01 mm up to 45 mm, and ± 0,02 mm above. The calibrated diameter of each ring is marked on its upper face.

Metric

No.	Nominal size ød	Type	Material	Ø d [mm]	Ø D [mm]	Ø E [mm]	T [mm]
177-220	1 mm	A	Steel	1	20		4
177-222	1,1 mm	A	Steel	1,1	20		4
177-225	1,2 mm	A	Steel	1,2	20		4
177-227	1,3 mm	A	Steel	1,3	20		4
177-230	1,4 mm	A	Steel	1,4	20		4
177-236	1,75 mm	A	Steel	1,75	25		5
177-239	2 mm	A	Steel	2	25		5
177-242	2,25 mm	A	Steel	2,25	25		5
177-208	2,5 mm	A	Steel	2,5	25		7
177-246	2,75 mm	A	Steel	2,75	25		7
177-248	3 mm	A	Steel	3	25		7
177-250	3,25 mm	A	Steel	3,25	25		7
177-252	3,5 mm	A	Steel	3,5	25		7
177-255	3,75 mm	A	Steel	3,75	25		7
177-204	4 mm	A	Steel	4	25		7
177-418	4 mm	A	Ceramic	4	25		7
177-257	4,5 mm	A	Steel	4,5	25		7
177-205	5 mm	A	Steel	5	25		7
177-263	5,5 mm	A	Steel	5,5	25		7
177-267	6 mm	A	Steel	6	25		7
177-420	6 mm	A	Ceramic	6	25		7
177-271	6,5 mm	A	Steel	6,5	25		7
177-275	7 mm	A	Steel	7	25		7
177-125	8 mm	A	Steel	8	32		10
177-423	8 mm	A	Ceramic	8	32		10
177-279	9 mm	A	Steel	9	32		10
177-126	10 mm	A	Steel	10	32		10
177-424	10 mm	A	Ceramic	10	32		10
177-284	12 mm	A	Steel	12	32		10
177-425	12 mm	A	Ceramic	12	32		10
177-132	14 mm	A	Steel	14	38		10
177-177	16 mm	A	Steel	16	45		10
177-427	16 mm	A	Ceramic	16	45		10
177-133	17 mm	A	Steel	17	45		10
177-285	18 mm	A	Steel	18	45		10
177-286	20 mm	A	Steel	20	45		10
177-429	20 mm	A	Ceramic	20	45		10
177-139	25 mm	A	Steel	25	53		15
177-430	25 mm	A	Ceramic	25	53		15
177-288	30 mm	A	Steel	30	71		15
177-431	30 mm	A	Ceramic	30	71		15
177-140	35 mm	A	Steel	35	71		15
177-432	35 mm	A	Ceramic	35	71		15
177-290	40 mm	A	Steel	40	71		15
177-433	40 mm	A	Ceramic	40	71		15
177-178	45 mm	A	Steel	45	85		15
177-434	45 mm	A	Ceramic	45	85		15
177-146	50 mm	A	Steel	50	85		20
177-292	60 mm	A	Steel	60	112		20
177-314	62 mm	A	Steel	62	112		20
177-147	70 mm	A	Steel	70	112		20
177-316	75 mm	A	Steel	75	125		25
177-294	80 mm	A	Steel	80	125		25
177-318	87 mm	A	Steel	87	140		25
177-148	90 mm	A	Steel	90	140		25
177-296	100 mm	A	Steel	100	160		25
177-298	125 mm	B	Steel	125	210	168	38,1
177-300	150 mm	B	Steel	150	235	187	38,1
177-302	175 mm	B	Steel	175	260	215	38,1
177-304	200 mm	B	Steel	200	311	244	38,1
177-306	225 mm	B	Steel	225	337	264	38,1
177-308	250 mm	B	Steel	250	362	290	38,1
177-310	275 mm	B	Steel	275	413	321	38,1
177-312	300 mm	B	Steel	300	438	340	38,1

All products to be sold to commercial customers.
Product illustrations are without obligation. Product descriptions, in particular any and all technical specifications, are only binding when explicitly agreed upon.

Mitutoyo

Absolute Digimatic Calipers
Page 169

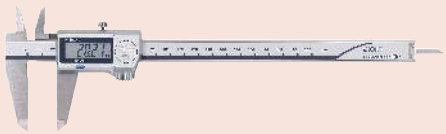

Analog Caliper
Page 181

Special Purpose Calipers
Page 188

Caliper Accessories
Page 204

All products to be sold to commercial customers.
Product illustrations are without obligation. Product descriptions, in particular any and all technical specifications, are only binding when explicitly agreed upon.

ABSOLUTE Coolant Proof Calipers IP67

Functions	Series 500
ORIGIN (ABS-Zero)	●
Auto Power OFF after 20 min. non use	●
Low voltage alarm	●

Specifications

Digital step	0,01 mm
Max. response speed	Unlimited
Display	LCD, character height 9 mm (150, 200 mm) 11 mm (300 mm)
Delivered	In a case, including 1 battery
Battery life	Approx. 5 years under normal use

Optional accessories

No.	Description
05CZA624	Digimatic Cable with Data Button IP Type, 1m, Caliper Type
05CZA625	Digimatic Cable with Data Button IP Type, 2m, Caliper Type
06AFM380A	USB Input Tool Direct (Digimatic USB), Digi/Digi2, With Data Button IP Caliper Type
264-620	U-WAVE fit, IP67 Type, Wireless Transmitter for Caliper
264-621	U-WAVE fit, Buzzer Type, Wireless Transmitter for Caliper
264-624	U-WAVE fit Bluetooth, IP67 Type, Wireless Transmitter for Caliper
264-625	U-WAVE fit Bluetooth, Buzzer Type, Wireless Transmitter for Caliper
02AZF310	Connection Unit, U-WAVE fit, Waterproof Type
050083-10	Depth Base Attachment for Caliper, 75mm width, 75mm width for 100, 150, 200mm Range
050084-10	Depth Base Attachment for Caliper, 100mm width for 100, 150, 200mm Range
050085-10	Depth Base Attachment for Caliper, 125mm width for 300mm Range

Consumable spares

No.	Description
938882	Battery SR44 1.5V

Beam 150 and 200 mm or 300 mm

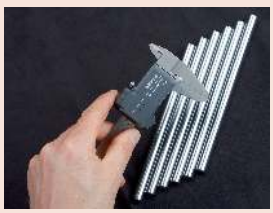

With Wireless System U-WAVE fit

050083-10

Series 500

This IP67 ABSOLUTE digimatic caliper allows reliable measurements in a wide range of situations and offers you the following benefits:

- Excellent resistance against water and dust (IP67 protection level) enabling use in machining situations that include splashing coolant fluid
- It is dustproof, complies with EN60529 and withstands temporary complete immersion in water without suffering any damage.
- ABS (ABSOLUTE) scale requires no origin setting after power-on and has no limit to response speed.

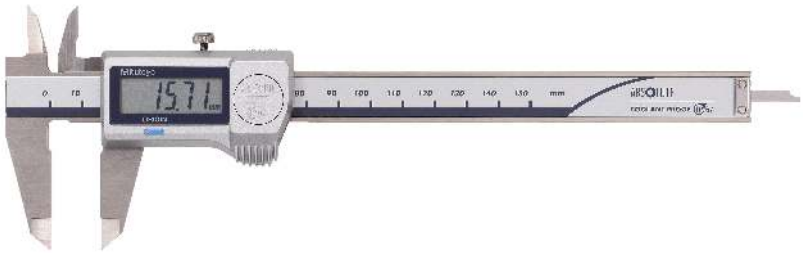

500-706-20

Metric

No.	Range [mm]	Depth bar	Thumb roller	Data output	Max. Permissible Error E MPE	Max. Permissible Error S MPE	Mass [g]
500-706-20	0 - 150	flat			±0,02 mm	±0,04 mm	168
500-709-20	0 - 150	Ø 1,9 mm			±0,02 mm	±0,04 mm	168
500-716-20	0 - 150	flat		●	±0,02 mm	±0,04 mm	168
500-702-20	0 - 150	flat	●		±0,02 mm	±0,04 mm	168
500-712-20	0 - 150	flat	●	●	±0,02 mm	±0,04 mm	168
500-719-20	0 - 150	Ø 1,9 mm	●	●	±0,02 mm	±0,04 mm	168
500-707-20	0 - 200	flat			±0,02 mm	±0,04 mm	198
500-717-20	0 - 200	flat		●	±0,02 mm	±0,04 mm	198
500-703-20	0 - 200	flat	●		±0,02 mm	±0,04 mm	198
500-713-20	0 - 200	flat	●	●	±0,02 mm	±0,04 mm	198
500-708-20	0 - 300	flat			±0,03 mm	±0,05 mm	345
500-718-20	0 - 300	flat		●	±0,03 mm	±0,05 mm	345
500-704-20	0 - 300	flat	●		±0,03 mm	±0,05 mm	350
500-714-20	0 - 300	flat	●	●	±0,03 mm	±0,05 mm	350

No.	L [mm]	A [mm]	B [mm]	C [mm]	D [mm]	H [mm]
500-706-20	233	16,5	21	14,6	40	16
500-709-20	233	16,5	21	14,6	40	16
500-716-20	233	16,5	21	14,6	40	16
500-702-20	233	16,5	21	14,6	40	16
500-712-20	233	16,5	21	14,6	40	16
500-719-20	233	16,5	21	14,6	40	16
500-707-20	290	20	24,5	18,1	50	16
500-717-20	290	20	24,5	18,1	50	16
500-703-20	290	20	24,5	18,1	50	16
500-713-20	290	20	24,5	18,1	50	16
500-708-20	404	22	27,5	19,8	64	20
500-718-20	404	22	27,5	19,8	64	20
500-704-20	404	22	27,5	19,8	64	20
500-714-20	404	22	27,5	19,8	64	20

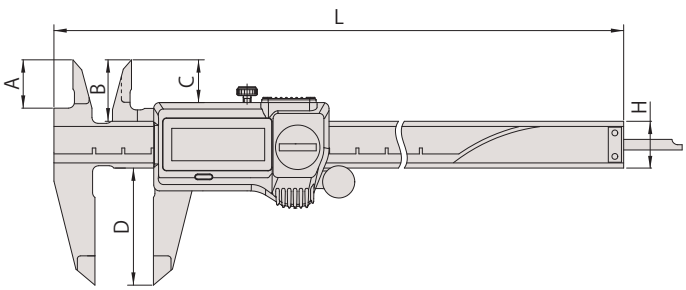

All products to be sold to commercial customers.
Product illustrations are without obligation. Product descriptions, in particular any and all technical specifications, are only binding when explicitly agreed upon.

ABSOLUTE Coolant Proof Calipers IP67 with Carbide Tipped Jaws

Series 500

These robust calipers have carbide-tipped jaws and allow reliable measurements in a wide range of situations.
The ABSOLUTE Digimatic Carbide Caliper IP67 offers you the following benefits:

- Excellent resistance against water and dust (IP67 protection level) enabling use in machining situations that include splashing coolant fluid.
- Dustproof, complies with EN60529 withstands temporary complete immersion in water without suffering any damage
- Extraordinarily long battery life.

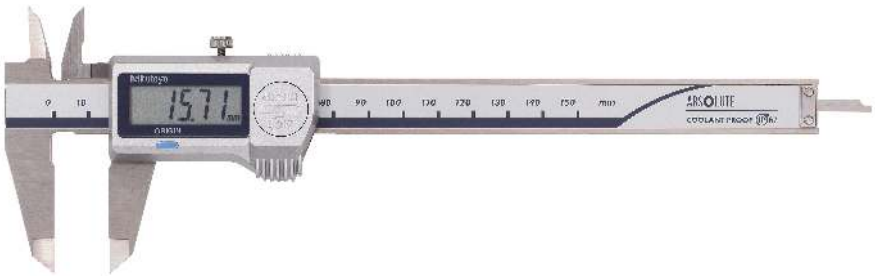

500-727-20

Metric — Carbide-tipped jaws for outside/inside measurement

No.	Range [mm]	Depth bar	Thumb roller	Data output	Max. Permissible Error E MPE	Max. Permissible Error S MPE	Mass [g]
500-727-20	0 - 150	flat		●	±0,02 mm	±0,04 mm	164
500-723-20	0 - 150	flat	●	●	±0,02 mm	±0,04 mm	168
500-728-20	0 - 200	flat		●	±0,02 mm	±0,04 mm	194
500-724-20	0 - 200	flat	●	●	±0,02 mm	±0,04 mm	198

No.	L [mm]	A [mm]	B [mm]	C [mm]	D [mm]	H [mm]
500-727-20	233	16,5	21	14,6	40	16
500-723-20	233	16,5	21	14,6	40	16
500-728-20	290	20	24,5	18,1	50	16
500-724-20	290	20	24,5	18,1	50	16

Metric — Carbide-tipped jaws for outside measurement

No.	Range [mm]	Depth bar	Thumb roller	Data output	Max. Permissible Error E MPE	Max. Permissible Error S MPE	Mass [g]
500-721-20	0 - 150	flat	●	●	±0,02 mm	±0,04 mm	168
500-722-20	0 - 200	flat	●	●	±0,02 mm	±0,04 mm	198

No.	L [mm]	A [mm]	B [mm]	C [mm]	D [mm]	H [mm]
500-721-20	233	16,5	21	14,6	40	16
500-722-20	290	20	24,5	18,1	50	16

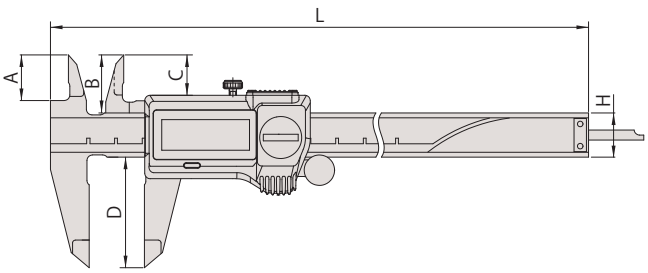

Functions	Series 500
ORIGIN (ABS-Zero)	●
Auto Power OFF after 20 min. non use	●
Low voltage alarm	●

Specifications

Digital step	0,01 mm
Max. response speed	Unlimited
Display	LCD, Character height 9 mm
Delivered	In a case, including 1 battery
Battery life	Approx. 5 years under normal use

Optional accessories

No.	Description
05CZA624	Digimatic Cable with Data Button IP Type, 1m, Caliper Type
05CZA625	Digimatic Cable with Data Button IP Type, 2m, Caliper Type
06AFM380A	USB Input Tool Direct (Digimatic USB), Digi/Digi2, With Data Button IP Caliper Type
264-620	U-WAVE fit, IP67 Type, Wireless Transmitter for Caliper
264-621	U-WAVE fit, Buzzer Type, Wireless Transmitter for Caliper
264-624	U-WAVE fit Bluetooth, IP67 Type, Wireless Transmitter for Caliper
264-625	U-WAVE fit Bluetooth, Buzzer Type, Wireless Transmitter for Caliper
02AZF310	Connection Unit, U-WAVE fit, Waterproof Type
050083-10	Depth Base Attachment for Caliper, 75mm width, 75mm width for 100, 150, 200mm Range
050084-10	Depth Base Attachment for Caliper, 100mm width for 100, 150, 200mm Range
050085-10	Depth Base Attachment for Caliper, 125mm width for 300mm Range

Consumable spares

No.	Description
938882	Battery SR44 1.5V

050083-10

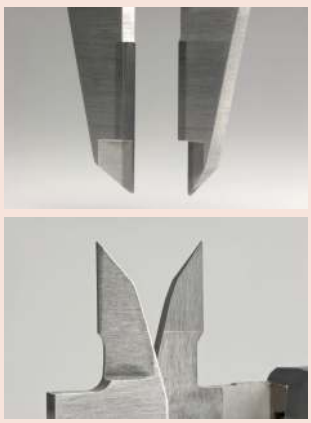

Carbide-tipped jaws

All products to be sold to commercial customers.
Product illustrations are without obligation. Product descriptions, in particular any and all technical specifications, are only binding when explicitly agreed upon.

ABSOLUTE AOS Digimatic Calipers

Functions	Series 500
ORIGIN (ABS-Zero)	●
ON/OFF	●
ABS / INC (INC ZERO)	●
Low voltage alarm	●

Specifications

Digital step	0,01 mm
Max. response speed	Unlimited
Display	LCD, Character Height 9 mm (150, 200 mm) 11 mm (300 mm)
Delivered	In a case, including 1 battery
Battery life	Approx. 5 years under normal use

Optional accessories

No.	Description
959149	Digimatic Cable, Straight, Data Button,, 1m
959150	Digimatic Cable, Straight, Data Button,, 2m
06AFM380C	USB Input Tool Direct (Digimatic USB), Digi/Digi2, Straight, with Data Button
264-620	U-WAVE fit, IP67 Type, Wireless Transmitter for Caliper
264-621	U-WAVE fit, Buzzer Type, Wireless Transmitter for Caliper
264-624	U-WAVE fit Bluetooth, IP67 Type, Wireless Transmitter for Caliper
264-625	U-WAVE fit Bluetooth, Buzzer Type, Wireless Transmitter for Caliper
02AZF300	Connection Unit, U-WAVE fit, Standard Type
959143	Data Hold Unit
050083-10	Depth Base Attachment for Caliper, 75mm width, 75mm width for 100, 150, 200mm Range
050084-10	Depth Base Attachment for Caliper, 100mm width for 100, 150, 200mm Range
050085-10	Depth Base Attachment for Caliper, 125mm width for 300mm Range

Consumable spares

No.	Description
938882	Battery SR44 1.5V

Round depth bar type

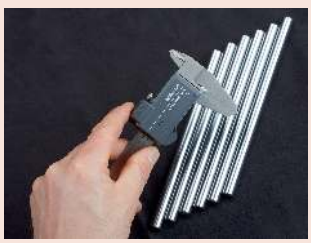

Caliper with Wireless System U-WAVE fit

050083-10

Series 500

This digimatic caliper allows you to take reliable measurements and offers you the following benefits:

- AOS (Advanced Onsite Sensor) induction type encoder used in top-of-the-line ABS coolant-proof calipers
- Thanks to the adoption of the electromagnetic induction type ABS encoder, this caliper can be used without concern for contamination on the scale face during measurement. Detection signal is not affected by dirt (water, oil, etc.) on surface of a scale.
- ABS (ABSOLUTE) scale requires no origin setting after power-on and has no limit to response speed.

500-181-30

Metric

No.	Range [mm]	Depth bar	Thumb roller	Data output	Max. Permissible Error E MPE	Max. Permissible Error S MPE	Mass [g]
500-180-30	0 - 100	Ø 1,9 mm			±0,02 mm	±0,04 mm	143
500-201-30	0 - 100	Ø 1,9 mm		●	±0,02 mm	±0,04 mm	143
500-150-30	0 - 100	Ø 1,9 mm	●	●	±0,02 mm	±0,04 mm	143
500-181-30	0 - 150	flat			±0,02 mm	±0,04 mm	168
500-184-30	0 - 150	Ø 1,9 mm			±0,02 mm	±0,04 mm	168
500-161-30	0 - 150	flat		●	±0,02 mm	±0,04 mm	168
500-203-30	0 - 150	Ø 1,9 mm		●	±0,02 mm	±0,04 mm	168
500-151-30	0 - 150	flat	●	●	±0,02 mm	±0,04 mm	168
500-158-30	0 - 150	Ø 1,9 mm	●	●	±0,02 mm	±0,04 mm	168
500-182-30	0 - 200	flat			±0,02 mm	±0,04 mm	194
500-162-30	0 - 200	flat		●	±0,02 mm	±0,04 mm	194
500-152-30	0 - 200	flat	●	●	±0,02 mm	±0,04 mm	198
500-205-30	0 - 300	flat		●	±0,03 mm	±0,05 mm	345
500-153-30	0 - 300	flat	●	●	±0,03 mm	±0,05 mm	350

No.	L [mm]	A [mm]	B [mm]	C [mm]	D [mm]	H [mm]
500-180-30	182	16,5	21	14,5	40	16
500-201-30	182	16,5	21	14,5	40	16
500-150-30	182	16,5	21	14,5	40	16
500-181-30	233	16,5	21	14,5	40	16
500-184-30	233	16,5	21	14,5	40	16
500-161-30	233	16,5	21	14,5	40	16
500-203-30	233	16,5	21	14,5	40	16
500-151-30	233	16,5	21	14,5	40	16
500-158-30	233	16,5	21	14,5	40	16
500-182-30	290	20	24,5	18	50	16
500-162-30	290	20	24,5	18	50	16
500-152-30	290	20	24,5	18	50	16
500-205-30	404	22	27,5	19,8	64	20
500-153-30	404	22	27,5	19,8	64	20

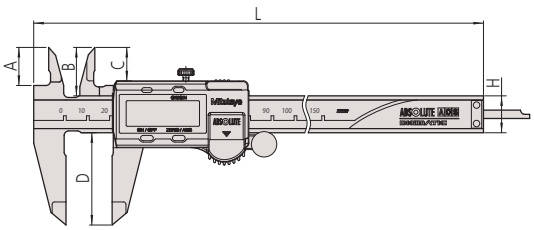

All products to be sold to commercial customers.
Product illustrations are without obligation. Product descriptions, in particular any and all technical specifications, are only binding when explicitly agreed upon.

ABSOLUTE AOS Digimatic Calipers with Carbide Tipped Jaws

Series 500

These Digimatic calipers have carbide-tipped jaws and allow you to take reliable measurements and offer you the following benefits:

- Thanks to the adoption of the electromagnetic induction type ABS encoder, this caliper can be used without concern for contamination on the scale face during measurement. Detection signal is not affected by dirt (water, oil, etc.) on surface of a scale.
- The slider provides smooth, stable and comfortable operation.
- Character height: 9 mm (alleviation of fatigue with the high-contrast LCD)
- The ABS (ABSOLUTE) scale requires no origin setting after power-on and also has no limit to response speed.
- Extraordinary battery life

Metric — Carbide-tipped jaws for outside/inside measurement

No.	Range [mm]	Depth bar	Thumb roller	Data output	Max. Permissible Error E MPE	Max. Permissible Error S MPE	Mass [g]
500-234-30	0 - 150	Flat		●	±0,02 mm	±0,04 mm	168
500-155-30	0 - 150	Flat	●	●	±0,02 mm	±0,04 mm	168
500-236-30	0 - 200	Flat		●	±0,02 mm	±0,04 mm	194
500-157-30	0 - 200	Flat	●	●	±0,02 mm	±0,04 mm	194

No.	L [mm]	A [mm]	B [mm]	C [mm]	D [mm]	H [mm]
500-234-30	233	16,5	21	14,5	40	16
500-155-30	233	16,5	21	14,5	40	16
500-236-30	290	20	24,5	18	50	16
500-157-30	290	20	24,5	18	50	16

Metric — Carbide-tipped jaws for outside measurement

No.	Range [mm]	Depth bar	Thumb roller	Data output	Max. Permissible Error E MPE	Max. Permissible Error S MPE	Mass [g]
500-233-30	0 - 150	Flat		●	±0,02 mm	±0,04 mm	168
500-154-30	0 - 150	Flat	●	●	±0,02 mm	±0,04 mm	168
500-235-30	0 - 200	Flat		●	±0,02 mm	±0,04 mm	194
500-156-30	0 - 200	Flat	●	●	±0,02 mm	±0,04 mm	194

No.	L [mm]	A [mm]	B [mm]	C [mm]	D [mm]	H [mm]
500-233-30	233	16,5	21	14,5	40	16
500-154-30	233	16,5	21	14,5	40	16
500-235-30	290	20	24,5	18	50	16
500-156-30	290	20	24,5	18	50	16

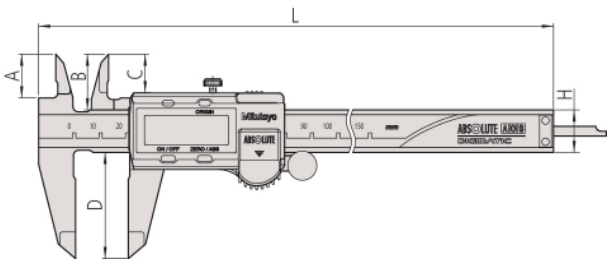

Functions	Series 500
ORIGIN (ABS-Zero)	●
ON/OFF	●
ABS / INC (INC ZERO)	●
Low voltage alarm	●

Specifications

Digital step	0,01 mm
Max. response speed	Unlimited
Display	LCD, Character Height 9 mm
Delivered	In a case, including 1 battery
Battery life	Approx. 5 years under normal use

Optional accessories

No.	Description
959149	Digimatic Cable, Straight, Data Button,, 1m
959150	Digimatic Cable, Straight, Data Button,, 2m
06AFM380C	USB Input Tool Direct (Digimatic USB), Digi/Digi2, Straight, with Data Button
264-620	U-WAVE fit, IP67 Type, Wireless Transmitter for Caliper
264-621	U-WAVE fit, Buzzer Type, Wireless Transmitter for Caliper
264-624	U-WAVE fit Bluetooth, IP67 Type, Wireless Transmitter for Caliper
264-625	U-WAVE fit Bluetooth, Buzzer Type, Wireless Transmitter for Caliper
02AZF300	Connection Unit, U-WAVE fit, Standard Type
959143	Data Hold Unit
050083-10	Depth Base Attachment for Caliper, 75mm width, 75mm width for 100, 150, 200mm Range
050084-10	Depth Base Attachment for Caliper, 100mm width for 100, 150, 200mm Range
050085-10	Depth Base Attachment for Caliper, 125mm width for 300mm Range

Consumable spares

No.	Description
938882	Battery SR44 1.5V

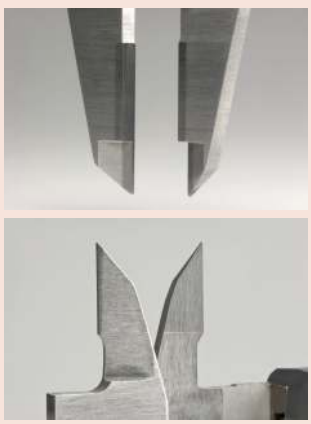

Carbide-tipped jaws

050083-10

All products to be sold to commercial customers.
Product illustrations are without obligation. Product descriptions, in particular any and all technical specifications, are only binding when explicitly agreed upon.

ABSOLUTE Digimatic Calipers for Long Range

Functions	Series 500
ORIGIN (ABS-Zero)	●
ON/OFF	●
Low voltage alarm	●
Data output	●

Specifications

Digital step	0,01 mm
Max. response speed	Unlimited
Display	LCD, Character Height 10 mm
Delivered	In a case, including 1 battery
Battery life	Approx. 20000 hours under normal use

Optional accessories

No.	Description
959149	Digimatic Cable, Straight, Data Button,, 1m
959150	Digimatic Cable, Straight, Data Button,, 2m
06AFM380C	USB Input Tool Direct (Digimatic USB), Digi/Digi2, Straight, with Data Button
02AZD730G	U-WAVE-T, IP67 Type, Wireless Transmitter
02AZD880G	U-WAVE-T, Buzzer Type, Wireless Transmitter
02AZD790C	U-WAVE-T Connection Cable C, Straight, with Data Button
959143	Data Hold Unit

Consumable spares

No.	Description
938882	Battery SR44 1.5V

Series 500

ABSOLUTE®

This digimatic caliper allows you to take reliable measurements and offers you the following benefits:

- It has a robust design (6 x 25 mm beam) for large measuring ranges.
- ABSOLUTE System delivers reliable measurements.
- The slider provides smooth, stable and comfortable operation.
- Character height: 10 mm

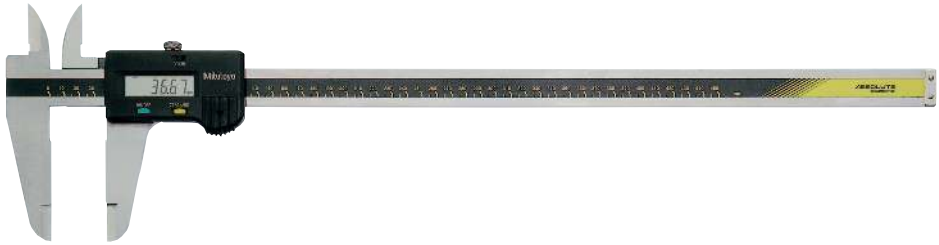

500-500-10

Metric

No.	Range [mm]	Max. Permissible Error E MPE	Max. Permissible Error S MPE	Mass [g]	L [mm]	A [mm]	B [mm]	C [mm]	D [mm]	H [mm]
500-500-10	0 - 450	±0,05 mm	±0,07 mm	1170	630	38	47	35,9	90	25
500-501-10	0 - 600	±0,05 mm	±0,07 mm	1350	780	38	47	35,9	90	25
500-502-10	0 - 1000	±0,07 mm	±0,09 mm	3300	1240	50	60	49,8	130	32

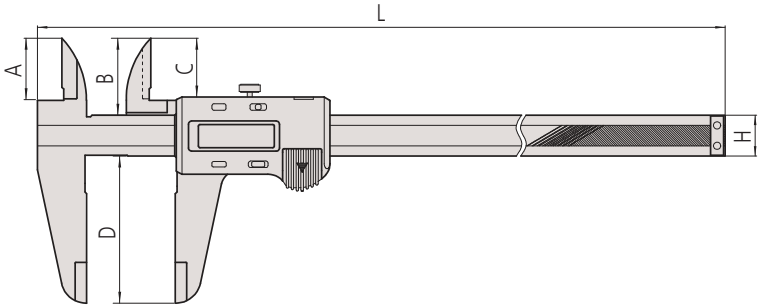

All products to be sold to commercial customers.
Product illustrations are without obligation. Product descriptions, in particular any and all technical specifications, are only binding when explicitly agreed upon.

Mitutoyo

ABSOLUTE Digimatic Calipers with Nib Style Jaws

Series 550

This is a Digimatic caliper with nib-style jaws that lets you measure inside dimensions.
It offers you the following benefits:

- Rounded measuring surfaces enable you to measure inside dimensions.
- ABSOLUTE System delivers reliable measurements.

Safety Dust- and Water-Protected
TÜVRheinland CERTIFIED
www.tuv.com ID 2011207400

200/300 mm

ABSOLUTE®

IP67

200/300mm

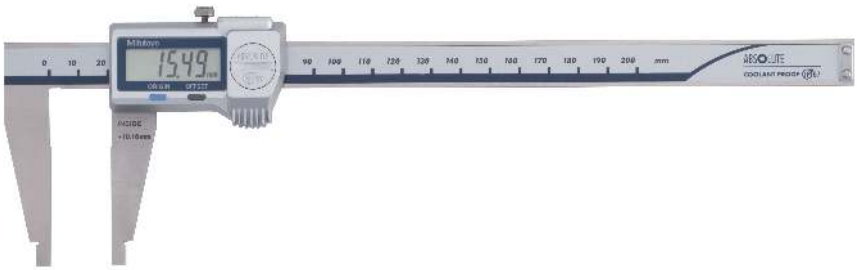

550-301-20

Functions	550-203-10 up to 550-207-10	550-301-20	550-331-20
ORIGIN (ABS-Zero)	●	●	●
PRESET			●
ON/OFF	●		
Auto Power OFF after 20 min. non use		●	●
Low voltage alarm	●	●	●
Data output	●	●	●

Specifications

Digital step	0,01 mm
Max. response speed	Unlimited
Delivered	In a case, including 1 battery
OFFSET	10 mm (IP67 type only)
Battery life	Approx. 5 years, 3,5 years (>300 mm)

Metric — IP67 model

No.	Range [mm]	Inside measuring from	Max. Permissible Error E MPE	Max. Permissible Error S MPE	Mass [g]	L [mm]	a [mm]	b [mm]	c [mm]
550-301-20	0 - 200	10,1 mm	±0,03 mm	±0,03 mm	180	290	60	8	16
550-331-20	0 - 300	10,1 mm	±0,04 mm	±0,04 mm	365	404	75	12	20

Metric — Non IP67 model

No.	Range [mm]	Inside measuring from	Max. Permissible Error E MPE	Max. Permissible Error S MPE	Mass [g]	L [mm]	a [mm]	b [mm]	c [mm]
550-203-10	0 - 450	20,1 mm	±0,05 mm	±0,05 mm	1110	630	100	18	25
550-205-10	0 - 600	20,1 mm	±0,05 mm	±0,05 mm	1290	780	100	18	25
550-207-10	0 - 1000	20,1 mm	±0,07 mm	±0,07 mm	3350	1240	140	24	32

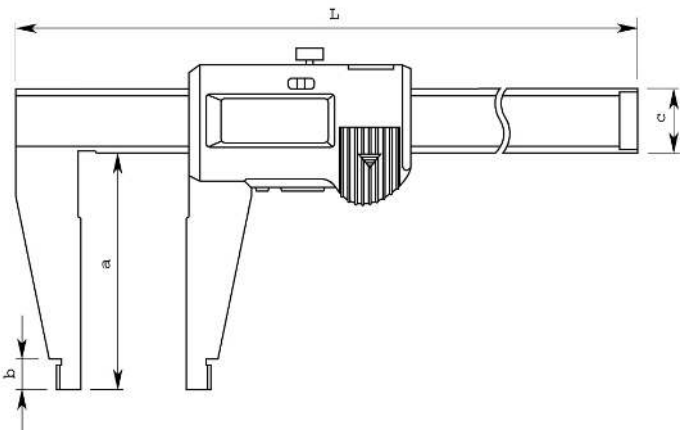

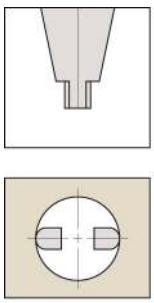

Round surfaces of jaws for measuring inside dimensions

Optional accessories

No.	Description
959149	Digimatic Cable, Straight, Data Button,, 1m
959150	Digimatic Cable, Straight, Data Button,, 2m
06AFM380C	USB Input Tool Direct (Digimatic USB), Digi/Digi2, Straight, with Data Button
02AZD880G	U-WAVE-T, Buzzer Type, Wireless Transmitter
02AZD730G	U-WAVE-T, IP67 Type, Wireless Transmitter
02AZD790C	U-WAVE-T Connection Cable C, Straight, with Data Button
959143	Data Hold Unit

Optional accessories for IP67

No.	Description
05CZA624	Digimatic Cable with Data Button IP Type, 1m, Caliper Type
05CZA625	Digimatic Cable with Data Button IP Type, 2m, Caliper Type
06AFM380A	USB Input Tool Direct (Digimatic USB), Digi/Digi2, With Data Button IP Caliper Type
264-620	U-WAVE fit, IP67 Type, Wireless Transmitter for Caliper
264-621	U-WAVE fit, Buzzer Type, Wireless Transmitter for Caliper
264-624	U-WAVE fit Bluetooth, IP67 Type, Wireless Transmitter for Caliper
264-625	U-WAVE fit Bluetooth, Buzzer Type, Wireless Transmitter for Caliper
02AZF310	Connection Unit, U-WAVE fit, Waterproof Type

Consumable spares

No.	Description
938882	Battery SR44 1.5V

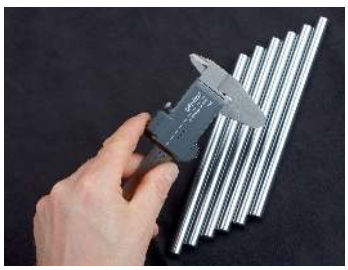

With Wireless System U-WAVE fit (0-200 mm and 0-300 mm only)

All products to be sold to commercial customers.
Product illustrations are without obligation. Product descriptions, in particular any and all technical specifications, are only binding when explicitly agreed upon.

ABSOLUTE Digimatic Calipers with Nib Style and Standard Jaws

Functions	Series 551 551-204-10 up to 551-207-10	551-301-20	551-331-20
ORIGIN (ABS-Zero)	●	●	●
PRESET			●
ON/OFF	●		
Auto Power OFF after 20 min. non use		●	●
Low voltage alarm	●	●	●
Data output	●	●	●

Series 551

This is a Digimatic caliper with nib-style and standard jaws.
It offers you the following benefits:

- Knife-shaped measuring surfaces allow you to take outside measurements.
- Rounded measuring surfaces enable you to measure inside dimensions.
- ABSOLUTE System delivers reliable measurements.

Safety Dust- and Water-Protected
TÜVRheinland CERTIFIED
www.tuv.com ID 2011207400

200/300 mm

ABSOLUTE®

IP67

200/300mm

551-301-20

Specifications

Digital step	0,01 mm
Max. response speed	Unlimited
Display	LCD, character height: 9 mm (200 mm), 11 mm (300 mm), 10 mm (>300 mm)
Delivered	In a case, including 1 battery
OFFSET	10 mm (IP67 type only)
Battery life	Approx. 5 years, 3,5 year (>300 mm)

Optional accessories

No.	Description
959149	Digimatic Cable, Straight, Data Button,, 1m
959150	Digimatic Cable, Straight, Data Button,, 2m
06AFM380C	USB Input Tool Direct (Digimatic USB), Digi/Digi2, Straight, with Data Button
02AZD880G	U-WAVE-T, Buzzer Type, Wireless Transmitter
02AZD730G	U-WAVE-T, IP67 Type, Wireless Transmitter
02AZD790C	U-WAVE-T Connection Cable C, Straight, with Data Button
959143	Data Hold Unit

Optional accessories for IP67

No.	Description
05CZA625	Digimatic Cable with Data Button IP Type, 2m, Caliper Type
05CZA624	Digimatic Cable with Data Button IP Type, 1m, Caliper Type
06AFM380A	USB Input Tool Direct (Digimatic USB), Digi/Digi2, With Data Button IP Caliper Type
264-620	U-WAVE fit, IP67 Type, Wireless Transmitter for Caliper
264-621	U-WAVE fit, Buzzer Type, Wireless Transmitter for Caliper
264-624	U-WAVE fit Bluetooth, IP67 Type, Wireless Transmitter for Caliper
264-625	U-WAVE fit Bluetooth, Buzzer Type, Wireless Transmitter for Caliper
02AZF310	Connection Unit, U-WAVE fit, Waterproof Type

Consumable spares

No.	Description
938882	Battery SR44 1.5V

Metric — IP67 model

No.	Range [mm]	Inside measuring from	Max. Permissible Error E MPE	Max. Permissible Error S MPE	Mass [g]	L [mm]	a [mm]	b [mm]	c [mm]	d [mm]
551-301-20	0 - 200	10,1 mm	±0,03 mm	±0,03 mm	190	290	60	8	30	16
551-331-20	0 - 300	10,1 mm	±0,04 mm	±0,04 mm	400	404	90	10	40	20

Metric — Non IP67 model

No.	Range [mm]	Inside measuring from	Max. Permissible Error E MPE	Max. Permissible Error S MPE	Mass [g]	L [mm]	a [mm]	b [mm]	c [mm]	d [mm]
551-204-10	0 - 500	20,1 mm	±0,06 mm	±0,06 mm	1060	680	150	18	56	25
551-206-10	0 - 750	20,1 mm	±0,06 mm	±0,06 mm	1410	963	150	18	56	25
551-207-10	0 - 1000	20,1 mm	±0,07 mm	±0,07 mm	3430	1230	150	20	56	32

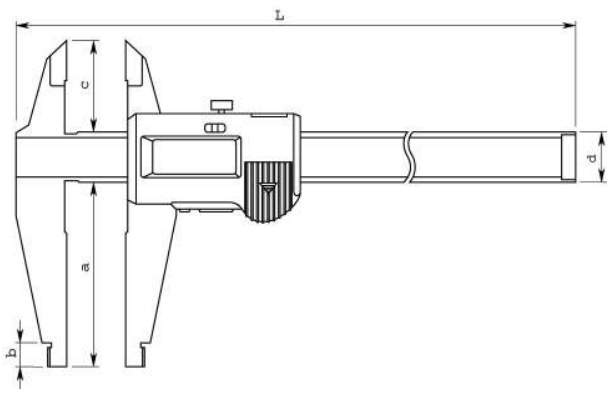

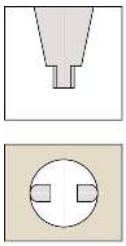

Round surface of jaws for measuring inside dimensions

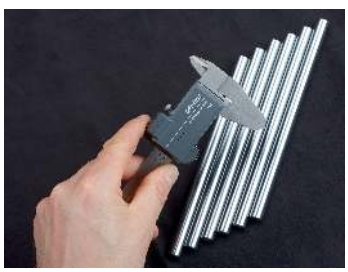

With Wireless System U-WAVE fit (0-200 mm and 0-300 mm only)

All products to be sold to commercial customers.
Product illustrations are without obligation. Product descriptions, in particular any and all technical specifications, are only binding when explicitly agreed upon.

Mitutoyo

ABSOLUTE Digimatic Carbon Fibre Calipers IP66

Series 552

This is a lightweight standard model of Digimatic caliper with steel jaws.
It offers you the following benefits:

- Its ultra-lightweight design (with carbon fibre reinforced material) reduces total weight by up to 50%.
- It has excellent resistance against water and dust (IP66 protection level) enabling you to use it in machining situations that include splashing coolant fluid.
- Direct readout of inside measurements from the LCD (you can easily set the offset value by using the offset button).
- Preset function lets you set a desired starting point.

552-304-10

Metric

No.	Range [mm]	Inside measuring from	Max. Permissible Error E MPE	Max. Permissible Error S MPE	Mass [g]
552-302-10	0 - 450	20,1 mm	±0,04 mm	±0,04 mm	715
552-303-10	0 - 600	20,1 mm	±0,04 mm	±0,04 mm	790
552-304-10	0 - 1000	20,1 mm	±0,05 mm	±0,05 mm	1760
552-305-10	0 - 1500	20,1 mm	±0,09 mm	±0,09 mm	2160
552-306-10	0 - 2000	20,1 mm	±0,12 mm	±0,12 mm	2560

No.	L [mm]	a [mm]	b [mm]	c [mm]	d [mm]	e [mm]	f [mm]
552-302-10	640	100	18	41,2	91,8	25	10
552-303-10	790	100	18	41,2	91,8	25	10
552-304-10	1230	150	24	62,8	113,8	32	10
552-305-10	1740	150	24	62,8	113,8	32	10
552-306-10	2250	150	24	62,8	113,8	32	10

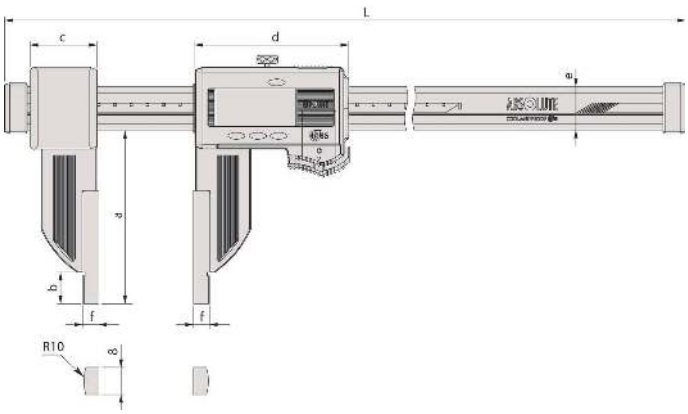

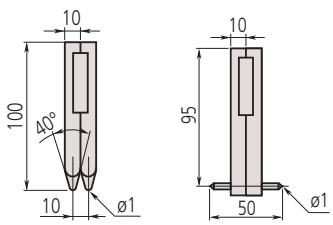

914055

914057

914053

914054

Functions	Series 552
DATA (output with cable) / HOLD (display value)	●
ORIGIN (ABS-Zero)	●
PRESET	●
Auto Power OFF after 20 min. non use	●
Low voltage alarm	●
Data output	●

Specifications

Digital step	0,01 mm
Max. response speed	Unlimited
Display	LCD, Character Height 10 mm
Delivered	In a case, including 1 battery
OFFSET	20 mm
Battery life	Approx. 5000 hours

Optional accessories

No.	Description
05CZA624	Digimatic Cable with Data Button IP Type, 1m, Caliper Type
05CZA625	Digimatic Cable with Data Button IP Type, 2m, Caliper Type
06AFM380A	USB Input Tool Direct (Digimatic USB), Digi/Digi2, With Data Button IP Caliper Type
02AZD880G	U-WAVE-T, Buzzer Type, Wireless Transmitter
02AZD730G	U-WAVE-T, IP67 Type, Wireless Transmitter
02AZD790A	U-WAVE-T Connection Cable A, with Data Button IP Caliper Type
914055	Center to Center Jaws Series 552, 2 pcs., (≥10,1mm) Metric
914057	Inside Groove Jaws Series 552, 2 pcs., Metric
914053	Holders (Clamps) Series 552, 2 pcs., 450 and 600mm Range
914054	Holders (Clamps) Series 552, 2 pcs., >600mm Range

Consumable spares

No.	Description
938882	Battery SR44 1.5V

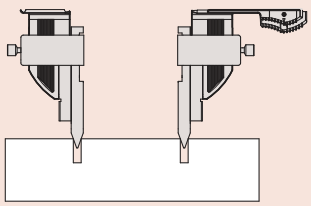

hole center to center

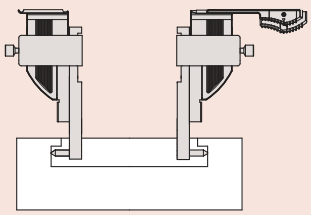

inside goove diameter

All products to be sold to commercial customers.
Product illustrations are without obligation. Product descriptions, in particular any and all technical specifications, are only binding when explicitly agreed upon.

ABSOLUTE Digimatic Carbon Fibre Calipers IP66 with Ceramic Jaws

Functions	Series 552
DATA (output with cable) / HOLD (display value)	●
ORIGIN (ABS-Zero)	●
PRESET	●
Auto Power OFF after 20 min. non use	●
Low voltage alarm	●
Data output	●

Specifications

Digital step	0,01 mm
Max. response speed	Unlimited
Display	LCD, Character Height 10 mm
Delivered	In a case, including 1 battery
OFFSET	20 mm
Battery life	Approx. 5000 hours

Optional accessories

No.	Description
05CZA624	Digimatic Cable with Data Button IP Type, 1m, Caliper Type
05CZA625	Digimatic Cable with Data Button IP Type, 2m, Caliper Type
06AFM380A	USB Input Tool Direct (Digimatic USB), Digi/Digi2, With Data Button IP Caliper Type
02AZD880G	U-WAVE-T, Buzzer Type, Wireless Transmitter
02AZD730G	U-WAVE-T, IP67 Type, Wireless Transmitter
02AZD790A	U-WAVE-T Connection Cable A, with Data Button IP Caliper Type
914055	Center to Center Jaws Series 552, 2 pcs., (≥10,1mm) Metric
914057	Inside Groove Jaws Series 552, 2 pcs., Metric
914053	Holders (Clamps) Series 552, 2 pcs., 450 and 600mm Range

Consumable spares

No.	Description
938882	Battery SR44 1.5V

Series 552

This is a lightweight standard model of Digimatic caliper with ceramic jaws.
It offers you the following benefits:

- Its ultra-lightweight design (with carbon fibre reinforced material) reduces total weight by up to 50%.
- It has excellent resistance against water and dust (IP66 protection level) enabling you to use it in machining situations that include splashing coolant fluid.
- Direct readout of inside measurements from the LCD (you can easily set the offset value by using the offset button).
- Preset function lets you set a desired starting point.

552-156-10

Metric

No.	Range [mm]	Inside measuring from	Max. Permissible Error E MPE	Max. Permissible Error S MPE	Mass [g]
552-155-10	0 - 450	20,1 mm	±0,04 mm	±0,04 mm	715
552-156-10	0 - 600	20,1 mm	±0,04 mm	±0,04 mm	790

No.	L [mm]	a [mm]	b [mm]	c [mm]	d [mm]	e [mm]	f [mm]
552-155-10	640	100	18	41,2	91,8	25	10
552-156-10	790	100	18	41,2	91,8	25	10

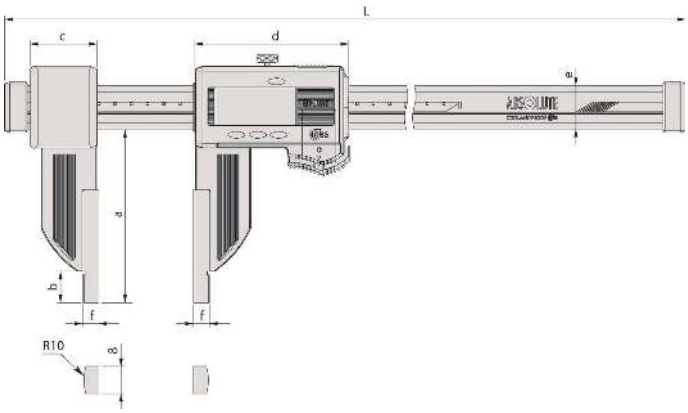

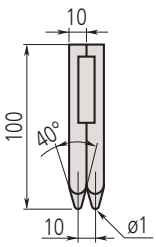

914055

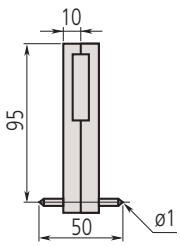

914057

914053

All products to be sold to commercial customers.
Product illustrations are without obligation. Product descriptions, in particular any and all technical specifications, are only binding when explicitly agreed upon.

ABSOLUTE Digimatic Carbon Fibre Calipers IP66 with Extra Long Jaws

Series 552

This is a lightweight standard model of Digimatic caliper with extra-long jaws.
It offers you the following benefits:

- Its ultra-lightweight design (with carbon fibre reinforced material) reduces total weight by up to 50%.
- It has excellent resistance against water and dust (IP66 protection level) enabling you to use it in machining situations that include splashing coolant fluid.
- Direct readout of inside measurements from the LCD (you can easily set the offset value by using the offset button).
- Preset function lets you set a desired starting point.

552-151-10

Metric

No.	Range [mm]	Inside measuring from	Max. Permissible Error E MPE	Max. Permissible Error S MPE	Mass [g]
552-150-10	0 - 450	20,1 mm	±0,06 mm	±0,06 mm	1215
552-151-10	0 - 600	20,1 mm	±0,06 mm	±0,06 mm	1290
552-152-10	0 - 1000	20,1 mm	±0,07 mm	±0,07 mm	2090
552-153-10	0 - 1500	20,1 mm	±0,11 mm	±0,11 mm	2490
552-154-10	0 - 2000	20,1 mm	±0,14 mm	±0,14 mm	2890

No.	L [mm]	a [mm]	b [mm]	c [mm]	d [mm]	e [mm]	f [mm]	g [mm]
552-150-10	680	173	65,5	89	91,8	25	10	8
552-151-10	830	173	65,5	89	91,8	25	10	8
552-152-10	1280	170,5	73	110	113,8	32	10	12
552-153-10	1790	170,5	73	110	113,8	32	10	12
552-154-10	2300	170,5	73	110	113,8	32	10	12

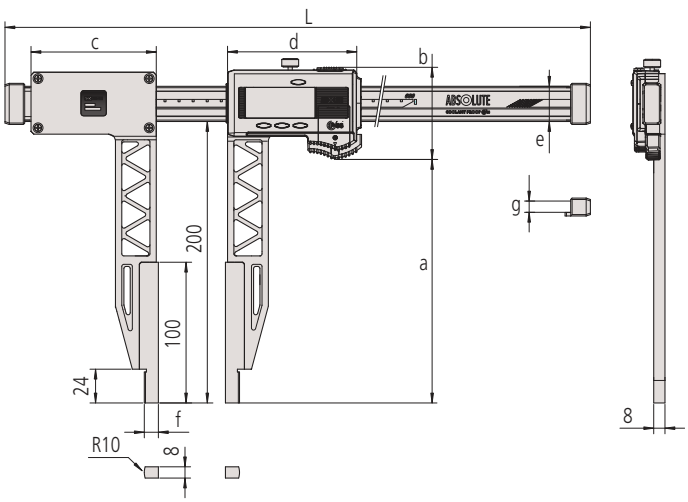

Functions	Series 552
ORIGIN (ABS-Zero)	●
PRESET	●
Auto Power OFF after 20 min. non use	●
Low voltage alarm	●
Data output	●

Specifications

Digital step	0,01 mm
Max. response speed	Unlimited
Display	LCD, Character Height 10 mm
Delivered	In a case, including 1 battery
OFFSET	20 mm
Battery life	Approx. 5000 hours

Optional accessories

No.	Description
05CZA624	Digimatic Cable with Data Button IP Type, 1m, Caliper Type
05CZA625	Digimatic Cable with Data Button IP Type, 2m, Caliper Type
06AFM380A	USB Input Tool Direct (Digimatic USB), Digi/Digi2, With Data Button IP Caliper Type
02AZD880G	U-WAVE-T, Buzzer Type, Wireless Transmitter
02AZD730G	U-WAVE-T, IP67 Type, Wireless Transmitter
02AZD790A	U-WAVE-T Connection Cable A, with Data Button IP Caliper Type

Consumable spares

No.	Description
938882	Battery SR44 1.5V

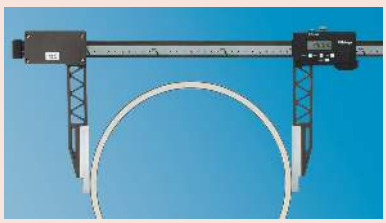

All products to be sold to commercial customers.
Product illustrations are without obligation. Product descriptions, in particular any and all technical specifications, are only binding when explicitly agreed upon.

ABSOLUTE Digimatic Carbon Fibre Calipers IP66 for Interchangeable Jaws/ Scriber

Functions	Series 552
ORIGIN (ABS-Zero)	●
PRESET	●
Auto Power OFF after 20 min. non use	●
Low voltage alarm	●
Data output	●

Specifications

Digital step	0,01 mm
Max. response speed	Unlimited
Display	LCD, Character Height 10 mm
Delivered	In a case, including 1 battery, scriber clamps (2 pcs.)
OFFSET	20 mm
Battery life	Approx. 5000 hours

Standard accessories

No.	Description
05GZA033	Scriber Clamp, for 9x9mm Scriber

Optional accessories

No.	Description
05CZA624	Digimatic Cable with Data Button IP Type, 1m, Caliper Type
05CZA625	Digimatic Cable with Data Button IP Type, 2m, Caliper Type
06AFM380A	USB Input Tool Direct (Digimatic USB), Digi/Digi2, With Data Button IP Caliper Type
02AZD880G	U-WAVE-T, Buzzer Type, Wireless Transmitter
02AZD730G	U-WAVE-T, IP67 Type, Wireless Transmitter
02AZD790A	U-WAVE-T Connection Cable A, with Data Button IP Caliper Type

Consumable spares

No.	Description
938882	Battery SR44 1.5V

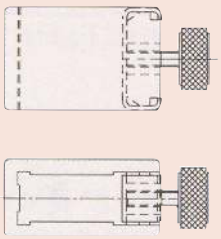

05GZA033

Series 552

This is a lightweight standard model of Digimatic caliper with optional interchangeable jaws.
It offers you the following benefits:

- Its ultra-lightweight design (with carbon fibre reinforced material) reduces total weight by up to 50%.
- It has excellent resistance against water and dust (IP66 protection level) enabling you to use it in machining situations that include splashing coolant fluid.
- Direct readout of inside measurements from the LCD (you can easily set the offset value by using the offset button).
- Preset function lets you set a desired starting point.

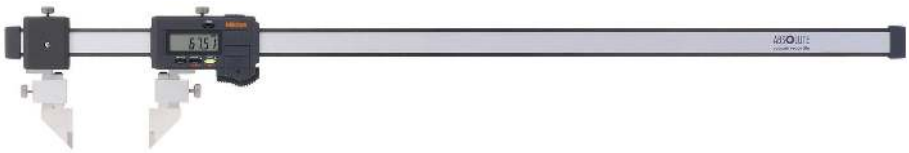

552-182-10
with optional accessories 07CZA056

Metric

No.	Range [mm]	Max. Permissible Error E MPE	Mass [g]
552-181-10	0 - 450	±0,04 mm	650
552-182-10	0 - 600	±0,04 mm	725
552-183-10	0 - 1000	±0,05 mm	1480
552-184-10	0 - 1500	±0,09 mm	1880
552-185-10	0 - 2000	±0,12 mm	2280

Accuracy: without jaws

Standard contact point	Measuring range		**0-450 mm** / 0-18"	**0-650 mm** / 0-24"	**0-1000 mm** / 0-40"	**0-1500 mm** / 0-60"	**0-2500 mm** / 0-80"
	Combination error		**± 0,06** / ± 0.0025"	**± 0,06** / ± 0.0025"	**± 0,07** / ± 0.0030"	**± 0,11** / ± 0.0045"	**± 0,14** / ± 0.0055"
Inside Point type	Measuring range (mm)	IN	**50-500 mm**	**50-650 mm**	**50-1050 mm**	**50-1550 mm**	**50-2550 mm**
		OUT	**0-450 mm**	**0-600 mm**	**0-1000 mm**	**0-1500 mm**	**0-2500 mm**
	Measuring range (in)	IN	**50,8-500,8 mm** / 2-20"	**50,8-650,8 mm** / 2-26"	**50,8-1050,8 mm** / 2-42"	**50,8-1550,8 mm** / 2-62"	**50,8-2550,8 mm** / 2-82"
		OUT	**0-450 mm** / 0-18"	**0-600 mm** / 0-24"	**0-1000 mm** / 0-40"	**0-1500 mm** / 0-60"	**0-2500 mm** / 0-80"
	Combination error		**± 0,09 mm** / ± 0.0035"	**± 0,09 mm** / ± 0.0035"	**± 0,10 mm** / ± 0.0040"	**± 0,14 mm** / ± 0.0055"	**± 0,17 mm** / ± 0.0070"
Centerline type	Measuring range (mm)		**30-480 mm**	**30-630 mm**	**30-1030 mm**	**30-1530 mm**	**30-2030 mm**
	Measuring range (in)		**30,48-480,8 mm** / 1.2-19.2"	**30,48-630,48 mm** / 1.2-25.2"	**30,48-1030,48 mm** / 1.2-41.2"	**30,48-1530,48 mm**	**30,48-2030,48 mm**
	Combination error		**± 0,08 mm** / ± 0.0030"	**± 0,08 mm** / ± 0.0030"	**± 0,09 mm** / ± 0.0035"	**± 0,13 mm** / ± 0.0055"	**± 0,16 mm** / ± 0.0065"
Scriber type	Measuring range (mm)		**30-480 mm**	**30-630 mm**	**30-1030 mm**	**30-1530 mm**	**30-2030 mm**
	Measuring range (in)		**30,48-480,8 mm** / 1.2-19.2"	**30,48-630,48 mm** / 1.2-25.2"	**30,48-1030,48 mm** / 1.2-41.2"	**30,48-1530,48 mm** / 1.2-61.2"	**30,48-2030,48 mm** / 1.2-81.2"
	Combination error		**± 0,10** / ± 0.0040"	**± 0,10** / ± 0.0040"	**± 0,11** / ± 0.0045"	**± 0,15** / ± 0.0060"	**± 0,18** / ± 0.0070"
Surface Plate type + Scriber	Measuring range		**0-450 mm** / 0-17"	**0-600 mm** / 0-23.7"	**0-1000 mm** / 0-39.4"	**0-1500 mm** / 0-59.4"	**0-2500 mm** / 0-79.6"
	Combination error		**± 0,10** / ± 0.0040"	**± 0,10** / ± 0.0040"	**± 0,11** / ± 0.0045"	**± 0,15** / ± 0.0060"	**± 0,18** / ± 0.0070"
Surface Plate type + Inside Point type	Measuring range (mm)		**25-475 mm**	**25-625 mm**	**25-1025 mm**	**25-1525 mm**	**25-2025 mm**
			0-450 mm	**0-600 mm**	**0-1000 mm**	**0-1500 mm**	**0-2000 mm**
	Measuring range (in)		**25,4-475,4 mm** / 1-19"	**25,4-625,4 mm** / 1-24"	**25,4-1025,4 mm** / 1-41"	**25,4-1525,4 mm** / 1-62"	**25,4-2025,4 mm** / 1-81"
			0-450 mm / 0-18"	**0-600 mm** / 0-24"	**0-1000 mm** / 0-40"	**0-1500 mm** / 0-60"	**0-2000 mm** / 0-80"
	Combination error		**± 0,12 mm** / ± 0.0025"	**± 0,12 mm** / ± 0.0050"	**± 0,13 mm** / ± 0.0055"	**± 0,17 mm** / ± 0.0070"	**± 0,20 mm** / ± 0.0080"
Surface Plate type + Center Line type	Measuring range (mm)		**15-465 mm**	**15-615 mm**	**15-1015 mm**	**15-1515 mm**	**15-2015 mm**
			15,254-465,24 mm / 0,6-18.6"	**15,24-615,24 mm** / 0,6-24.6"	**15,24-1015,24 mm** / 0,6-40.6"	**15,24-1515,24 mm** / 0,6-60.6"	**15,24-2015,24 mm** / 0,6-80.6"
	Combination error		**± 0,11 mm**/ ± 0.0045"	**± 0,11 mm**/ ± 0.0045"	**± 0,12 mm**/ ± 0.0050"	**± 0,16 mm**/ ± 0.0066"	**± 0,19 mm**/ ± 0.0075"

Accuracy with different Interchangeable Jaws

All products to be sold to commercial customers.
Product illustrations are without obligation. Product descriptions, in particular any and all technical specifications, are only binding when explicitly agreed upon.

ABSOLUTE Digimatic Carbon Fibre Calipers IP66 for Interchangeable Jaws/ Scriber

Series 552

Interchangeable jaws (optional)

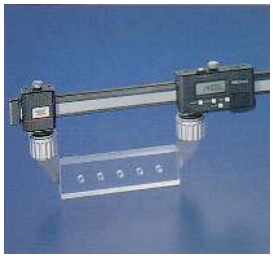

Standard type

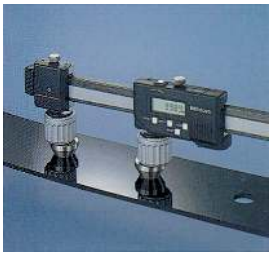

Centreline type

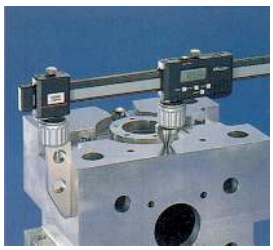

Surface plate type

Inside point type

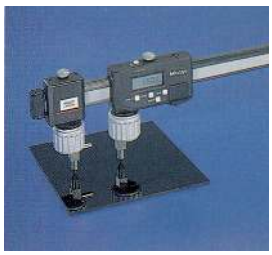

Scriber type

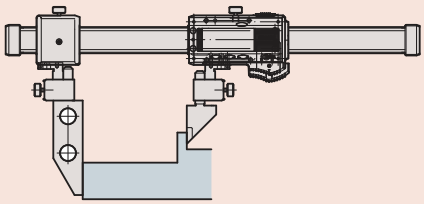

Surface plate type + Standard type

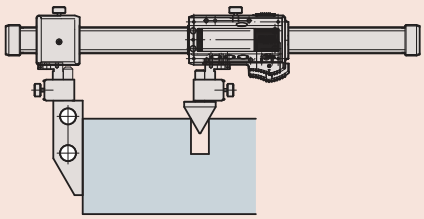

Surface plate type + Centrerline type

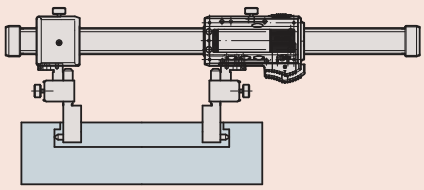

Inside point type

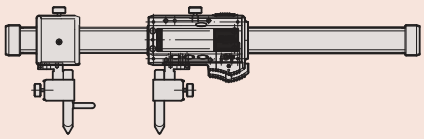

Scriber type

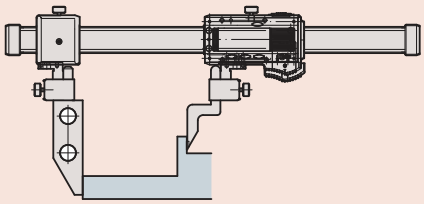

Surface plate type + Scriber for height gages

Metric

No.	Type	Mass [g]
07CZA056	Standard (pair)	90.6
07CZA057	Centreline (pair)	119.6
07CZA044	Surface plate (1 piece)	191.3
07CZA058	Inside point (pair)	98.8
07CZA055	Scriber (pair)	63.2
07GZA000.	Scriber for height gauges	120

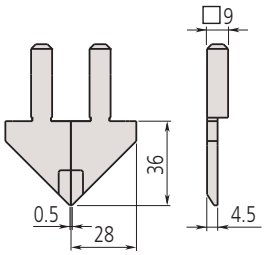

Standard type

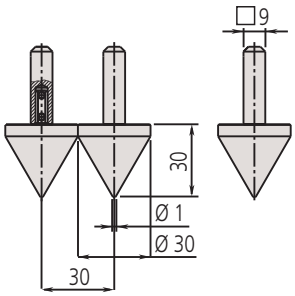

Centreline type

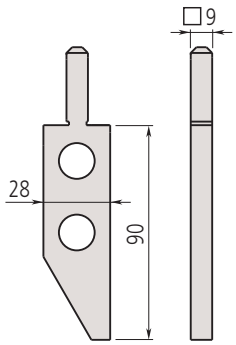

Surface plate type

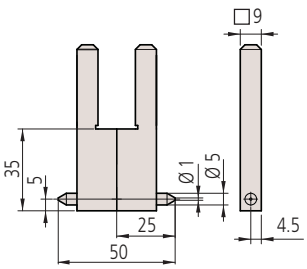

Inside point type

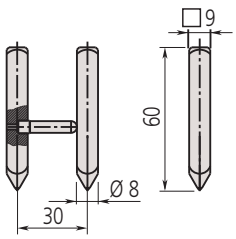

Scriber type

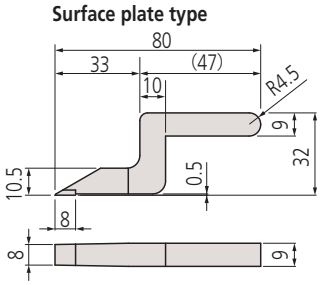

Scriber for height gages

All products to be sold to commercial customers.
Product illustrations are without obligation. Product descriptions, in particular any and all technical specifications, are only binding when explicitly agreed upon.

Vernier Calipers

Series 530

This is a standard type of vernier caliper that offers you the following benefits:
- Main scale and vernier scale satin chrome finish gives you high readability.
- Raised sliding surfaces

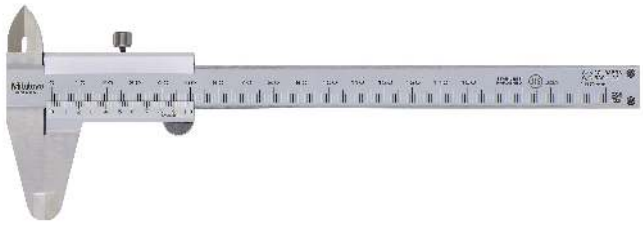

530-122

Specifications

Delivered	In a box

Optional accessories

No.	Description
050083-10	Depth Base Attachment for Caliper, 75mm width, 75mm width for 100, 150, 200mm Range
050084-10	Depth Base Attachment for Caliper, 100mm width for 100, 150, 200mm Range
050085-10	Depth Base Attachment for Caliper, 125mm width for 300mm Range

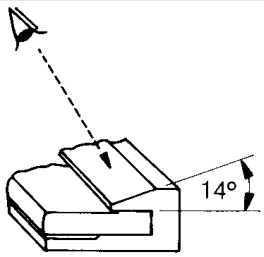

Easy reading due to vernier scales inclined by 14 degrees

Metr.ISO-Gew			
Nenn est. ext. extr. ϕ mm	Stg. Passo Pas Paso mm	Kern fond int. nucleo ϕ mm	Bohr trap meche broca ϕ mm
3	0.5	2.46	2.5
4	0.7	3.24	3.3
5	0.8	4.13	4.2
6	1	4.92	5
8	1.25	6.65	6.8
10	1.5	8.38	8.5
12	1.75	10.11	10.2
16	2	13.84	14
20	2.5	17.29	17.5
Whitworth			
ϕ in.	Gg/in.	ϕ mm	ϕ mm
1/4	20	4.72	5.0
5/16	18	6.13	6.4
3/8	16	7.49	7.7
1/2	12	9.99	10.25
5/8	11	12.92	13.25
3/4	10	15.8	16.25
7/8	9	18.61	19
1	8	21.34	21.75
101995			

530-316 only

Metric

Metric

No.	Range [mm]	Graduation	Depth bar	Max. Permissible Error E MPE	Max. Permissible Error S MPE	Mass [g]	L [mm]	a [mm]	b [mm]	c [mm]	d [mm]
530-122	0 - 150	0,02 mm	flat	±0,03 mm	±0,05 mm	143	229	40	21	17	16
530-123	0 - 200	0,02 mm	flat	±0,03 mm	±0,05 mm	180	288	50	24,5	20,5	16
530-124	0 - 300	0,02 mm	flat	±0,04 mm	±0,06 mm	355	404	64	27,5	22	20
530-100	0 - 100	0,05 mm	Ø 1,9 mm	±0,05 mm	±0,07 mm	128	182	40	21,5	17	16
530-102	0 - 150	0,05 mm	Ø 1,9 mm	±0,05 mm	±0,07 mm	144	229	40	21	17	16
530-101	0 - 150	0,05 mm	flat	±0,05 mm	±0,07 mm	143	229	40	21	17	16
530-108	0 - 200	0,05 mm	flat	±0,05 mm	±0,07 mm	180	288	50	24,5	20,5	16
530-109	0 - 300	0,05 mm	flat	±0,08 mm	±0,1 mm	355	404	64	27,5	22	20
530-501	0 - 600	0,05 mm	without	±0,1 mm	±0,12 mm	1300	780	90	47	38	25
530-502	0 - 1000	0,05 mm	without	±0,15 mm	±0,17 mm	3300	1240	130	60	50	32

Metric/Inch

Metric/Inch

No.	Range [Inch]	Range [mm]	Graduation	Depth bar	Max. Permissible Error E MPE	Max. Permissible Error S MPE	Mass [g]	L [mm]	a [mm]	b [mm]	c [mm]	d [mm]
530-312	0 - 6	0 - 150	0,02 mm/ 0,001"	flat	±0,03 mm	±0,05 mm	143	229	40	21	17	16
530-118	0 - 8	0 - 200	0,02 mm/ 0,001"	flat	±0,03 mm	±0,05 mm	180	288	50	24,5	20,5	16
530-119	0 - 12	0 - 300	0,02 mm/ 0,001"	flat	±0,04 mm	±0,06 mm	355	404	64	27,5	22	20
530-104	0 - 6	0 - 150	0,05 mm/ 1/128"	flat	±0,05 mm	±0,07 mm	143	229	40	21	17	16
530-316	0 - 6	0 - 150	0,05 mm/ 1/128"	flat	±0,05 mm	±0,07 mm	145	229	40	21	17	16
530-114	0 - 8	0 - 200	0,05 mm/ 1/128"	flat	±0,05 mm	±0,07 mm	180	288	50	24,5	20,5	16
530-115	0 - 12	0 - 300	0,05 mm/ 1/128"	flat	±0,08 mm	±0,1 mm	355	404	64	27,5	22	20

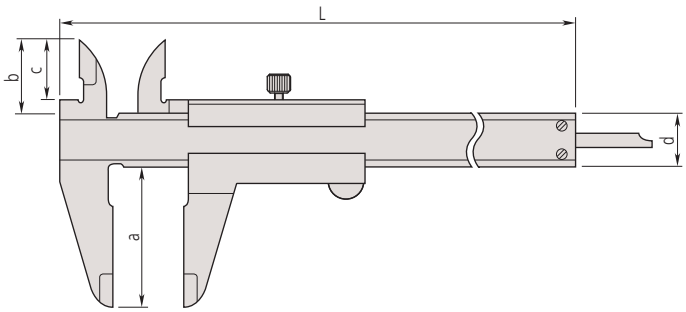

All products to be sold to commercial customers.
Product illustrations are without obligation. Product descriptions, in particular any and all technical specifications, are only binding when explicitly agreed upon.

Mitutoyo

Vernier Calipers with Carbide Tipped Jaws

Series 530

These Vernier Calipers have carbide-tipped jaws and offers you the following benefits:
- Main scale and vernier scale satin chrome finish gives you high readability.
- Raised sliding surfaces.

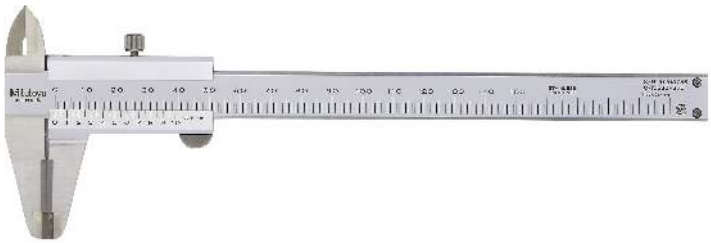

530-320

Metric

Carbide-tipped jaws for outside/inside measurement

No.	Range [mm]	Gradua-tion	Depth bar	Max. Permissi-ble Error E MPE	Max. Permissi-ble Error S MPE	Mass [g]	L [mm]	a [mm]	b [mm]	c [mm]	d [mm]
530-335	0 - 150	0,05 mm	flat	±0,05 mm	±0,07 mm	145	229	40	21	17	16

Metric

Carbide-tipped jaws for outside measurement

No.	Range [mm]	Gradua-tion	Depth bar	Max. Permissi-ble Error E MPE	Max. Permissi-ble Error S MPE	Mass [g]	L [mm]	a [mm]	b [mm]	c [mm]	d [mm]
530-320	0 - 150	0,05 mm	flat	±0,05 mm	±0,07 mm	145	229	40	21	17	16
530-321	0 - 200	0,05 mm	flat	±0,05 mm	±0,07 mm	181	288	50	24,5	20,5	16
530-322	0 - 300	0,05 mm	flat	±0,08 mm	±0,1 mm	355	404	64	27,5	22	20

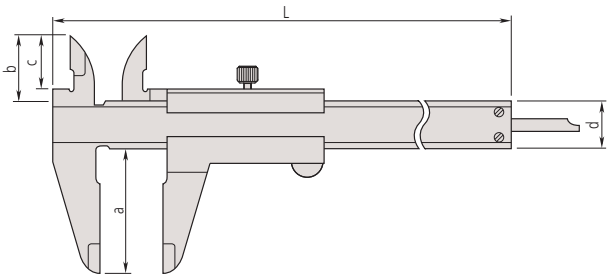

Specifications

Delivered	In a box

Optional accessories

No.	Description
050083-10	Depth Base Attachment for Caliper, 75mm width, 75mm width for 100, 150, 200mm Range
050084-10	Depth Base Attachment for Caliper, 100mm width for 100, 150, 200mm Range
050085-10	Depth Base Attachment for Caliper, 125mm width for 300mm Range

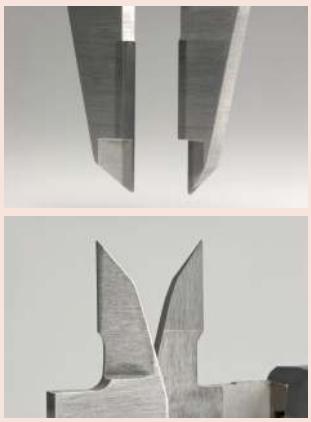

Carbide-tipped measuring surfaces

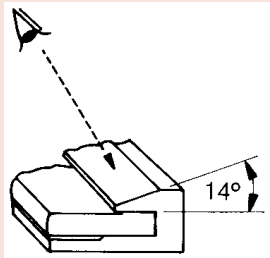

Easy reading due to vernier scales inclined by 14 degrees

All products to be sold to commercial customers.
Product illustrations are without obligation. Product descriptions, in particular any and all technical specifications, are only binding when explicitly agreed upon.

Vernier Calipers with Thumb Clamp

Series 531

These Vernier Calipers with thumb clamp only moves when you depress the spring-loaded thumb grip.

531-122

Specifications

Delivered	In a box

Optional accessories

No.	Description
050083-10	Depth Base Attachment for Caliper, 75mm width, 75mm width for 100, 150, 200mm Range
050084-10	Depth Base Attachment for Caliper, 100mm width for 100, 150, 200mm Range
050085-10	Depth Base Attachment for Caliper, 125mm width for 300mm Range

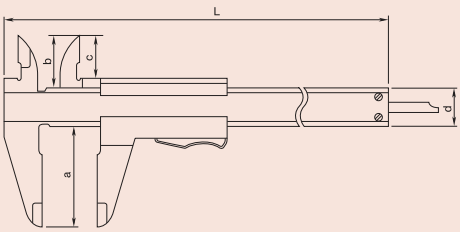

Metric

No.	Range [mm]	Graduation	Depth bar	Max. Permissible Error E MPE	Max. Permissible Error S MPE	Mass [g]	L [mm]	a [mm]	b [mm]	c [mm]	d [mm]
531-101	0 - 150	0,05 mm	flat	±0,05 mm	±0,07 mm	142	229	40	21,5	17	16
531-102	0 - 200	0,05 mm	flat	±0,05 mm	±0,07 mm	175	288	50	25	20,5	16
531-103	0 - 300	0,05 mm	flat	±0,08 mm	±0,1 mm	360	403	64	27,5	22	20

Metric/Inch

No.	Range [Inch]	Range [mm]	Graduation	Depth bar	Max. Permissible Error E MPE	Max. Permissible Error S MPE	Mass [g]	L [mm]	a [mm]	b [mm]	c [mm]	d [mm]
531-122	0 - 6	0 - 150	0,05 mm/ 1/128"	flat	±0,05 mm	±0,07 mm	142	229	40	21,5	17	16
531-108	0 - 8	0 - 200	0,05 mm/ 1/128"	flat	±0,05 mm	±0,07 mm	175	288	50	25	20,5	16
531-109	0 - 12	0 - 300	0,05 mm/ 1/128"	flat	±0,08 mm	±0,1 mm	360	403	64	27,5	22	20

Vernier Calipers with Fine Adjustment

Series 532

These Vernier Calipers have fine-adjustment to help you with slider positioning.

532-101

Specifications

Delivered	In a box

Optional accessories

No.	Description
050083-10	Depth Base Attachment for Caliper, 75mm width, 75mm width for 100, 150, 200mm Range
050084-10	Depth Base Attachment for Caliper, 100mm width for 100, 150, 200mm Range
050085-10	Depth Base Attachment for Caliper, 125mm width for 300mm Range

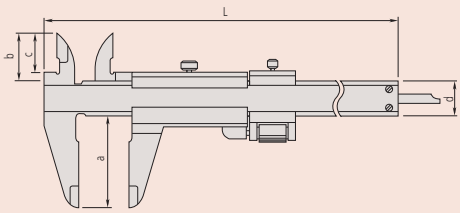

Metric

No.	Range [mm]	Graduation	Depth bar	Max. Permissible Error E MPE	Max. Permissible Error S MPE	Mass [g]	L [mm]	a [mm]	b [mm]	c [mm]	d [mm]
532-101	0 - 130	0,02 mm	flat	±0,03 mm	±0,05 mm	165	229	40	21,5	17	16
532-102	0 - 180	0,02 mm	flat	±0,03 mm	±0,05 mm	202	288	50	25	20,5	16
532-103	0 - 280	0,02 mm	flat	±0,04 mm	±0,06 mm	395	403	64	27,5	22	20

All products to be sold to commercial customers.
Product illustrations are without obligation. Product descriptions, in particular any and all technical specifications, are only binding when explicitly agreed upon.

Mitutoyo

Dial Calipers

Series 505

These Dial Calipers allows you to take reliable measurements and offers you the following benefits:

- Ultra-smooth sliding and high shock protection
- Easy to read dial with large character height

505-730

505-732

Metric

No.	Range [mm]	Graduation	Depth bar	Max. Permissible Error E MPE	Max. Permissible Error S MPE	Mass [g]	L [mm]	a [mm]	b [mm]	c [mm]	d [mm]
505-730	0 - 150	0,02 mm 2 mm/rev	flat	±0,03 mm	±0,05 mm	175	231	40	21	16,5	16
505-732	0 - 150	0,01 mm 1 mm/rev	flat	±0,02 mm	±0,04 mm	176	231	40	21	16,5	16
505-731	0 - 200	0,02 mm 2 mm/rev	flat	±0,03 mm	±0,05 mm	185	288	50	24,5	20	16
505-733	0 - 200	0,01 mm 1 mm/rev	flat	±0,03 mm	±0,05 mm	186	288	50	24,5	20	16
505-745	0 - 300	0,02 mm 2 mm/rev	flat	±0,04 mm	±0,06 mm	370	404	64	27,5	22	20

Metric

Carbide-tipped jaws for outside/inside measurement

No.	Range [mm]	Graduation	Depth bar	Max. Permissible Error E MPE	Max. Permissible Error S MPE	Mass [g]	L [mm]	a [mm]	b [mm]	c [mm]	d [mm]
505-735	0 - 150	0,02 mm 2mm/rev	flat	±0,03 mm	±0,05 mm	175	231	40	21	16,5	16

Metric

Carbide-tipped jaws for outside measurement

No.	Range [mm]	Graduation	Depth bar	Max. Permissible Error E MPE	Max. Permissible Error S MPE	Mass [g]	L [mm]	a [mm]	b [mm]	c [mm]	d [mm]
505-734	0 - 150	0,02 mm 2 mm/rev	flat	±0,03 mm	±0,05 mm	175	231	40	21	16,5	16

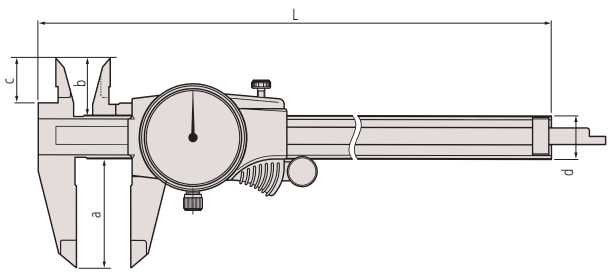

Specifications

Delivered	In a case

Optional accessories

No.	Description
050083-10	Depth Base Attachment for Caliper, 75mm width, 75mm width for 100, 150, 200mm Range
050084-10	Depth Base Attachment for Caliper, 100mm width for 100, 150, 200mm Range
050085-10	Depth Base Attachment for Caliper, 125mm width for 300mm Range

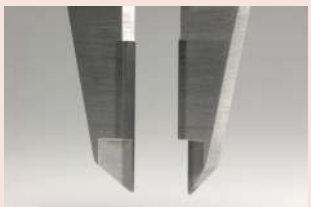

Carbide tipped jaws outside
505-734 / 505-735

Carbide tipped jaws inside and outside
505-735

All products to be sold to commercial customers.
Product illustrations are without obligation. Product descriptions, in particular any and all technical specifications, are only binding when explicitly agreed upon.

Vernier Calipers with Nib Style and Standard Jaws

Specifications

Delivered	In a box

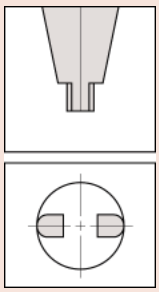

Round surface of jaws for measuring inside dimensions

Series 533

These vernier calipers with nib style and standard jaws let you take easy, metric measurements
They offer you the following benefits:

- You can read inside and outside measurements directly from the upper and lower vernier scales.
- Main scale and vernier scale satin chrome finish gives you high readability.

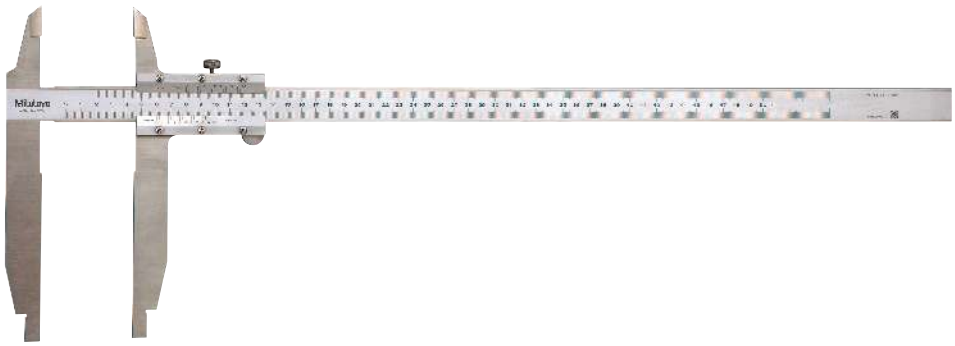

533-404
Without fine adjustment

Metric — With fine adjustment

No.	Range [mm]	Graduation	Inside measuring from	Max. Permissible Error E MPE	Max. Permissible Error S MPE
533-504	0 - 500	0,02 mm	20,1 mm	±0,05 mm	±0,05 mm
533-505	0 - 750	0,02 mm	20,1 mm	±0,07 mm	±0,07 mm
533-506	0 - 1000	0,02 mm	20,1 mm	±0,08 mm	±0,08 mm

No.	Mass [g]	L [mm]	a [mm]	b [mm]	c [mm]	d [mm]
533-504	1250	680	150	15	56	25
533-505	1550	963	150	15	56	25
533-506	3450	1230	150	20	56	32

Metric — Without fine adjustment

No.	Range [mm]	Graduation	Inside measuring from	Max. Permissible Error E MPE	Max. Permissible Error S MPE
533-404	0 - 500	0,05 mm	20,1 mm	±0,1 mm	±0,1 mm
533-405	0 - 750	0,05 mm	20,1 mm	±0,12 mm	±0,12 mm
533-406	0 - 1000	0,05 mm	20,1 mm	±0,15 mm	±0,15 mm

No.	Mass [g]	L [mm]	a [mm]	b [mm]	c [mm]	d [mm]
533-404	1200	680	150	15	56	25
533-405	1500	963	150	15	56	25
533-406	3300	1230	150	20	56	32

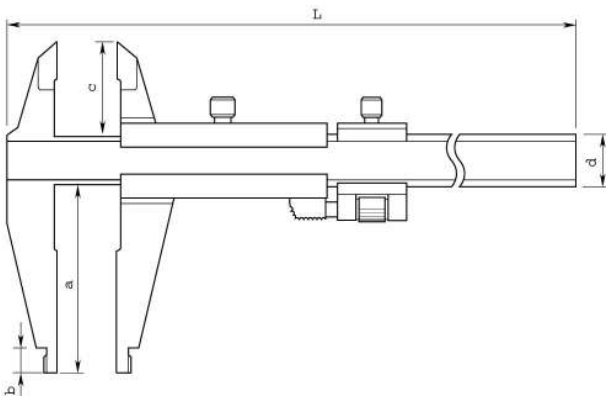

All products to be sold to commercial customers.
Product illustrations are without obligation. Product descriptions, in particular any and all technical specifications, are only binding when explicitly agreed upon.

Mitutoyo

Vernier Calipers with Nib Style Jaws

Series 160

These vernier calipers with nib style jaws come with or without fine adjustment.
They offer you the following benefits:

- For the metric only models the top offset vernier scale allows you to directly read the inside dimensions without having to add the nib widths.
- Main scale and vernier scale satin chrome finish gives you high readability.

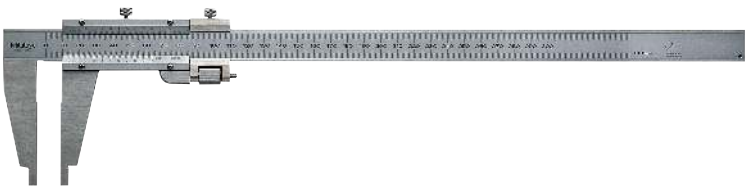

160-127

160-101

Specifications

Delivered	In a box

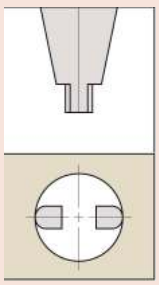

Rounded outside measuring surfaces for measuring inside dimensions

Metric

With fine adjustment

No.	Range [mm]	Graduation	Inside measuring from	Max. Permissible Error E MPE
160-127	0 - 300	0,02 mm	10,1 mm	±0,04 mm
160-128	0 - 450	0,02 mm	20,1 mm	±0,05 mm
160-101	0 - 600	0,02 mm	20,1 mm	±0,05 mm
160-104	0 - 1000	0,02 mm	20,1 mm	±0,07 mm

No.	Max. Permissible Error S MPE	Mass [g]	L [mm]	a [mm]	b [mm]	c [mm]	d [mm]	e [mm]	f [mm]	R [mm]
160-127	±0,04 mm	450	445	95	75	12	20	10	38	5
160-128	±0,05 mm	1200	630	125	100	18	25	14,8	6	10
160-101	±0,05 mm	1400	780	125	100	18	25	14,8	6	10
160-104	±0,07 mm	3500	1240	172	140	24	32	17	8	10

Metric

Without fine adjustment

No.	Range [mm]	Graduation	Inside measuring from	Max. Permissible Error E MPE
160-130	0 - 450	0,05 mm	20,1 mm	±0,1 mm
160-131	0 - 600	0,05 mm	20,1 mm	±0,1 mm
160-132	0 - 1000	0,05 mm	20,1 mm	±0,15 mm

No.	Max. Permissible Error S MPE	Mass [g]	L [mm]	a [mm]	b [mm]	c [mm]	d [mm]	e [mm]	f [mm]	R [mm]
160-130	±0,1 mm	1100	630	125	100	18	25	14,8	6	10
160-131	±0,1 mm	1300	780	125	100	18	25	14,8	6	10
160-132	±0,15 mm	3300	1240	172	140	24	32	17	8	10

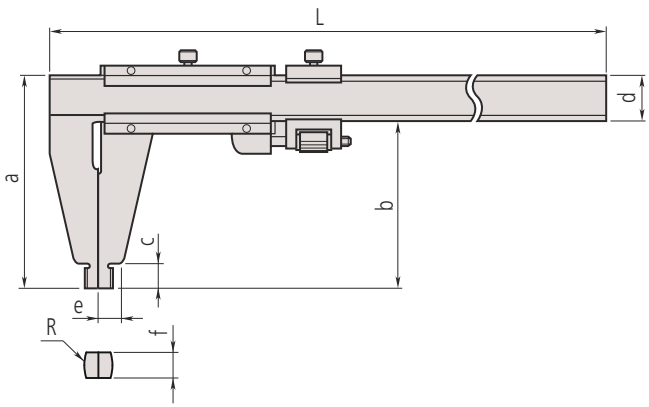

All products to be sold to commercial customers.
Product illustrations are without obligation. Product descriptions, in particular any and all technical specifications, are only binding when explicitly agreed upon.

Vernier Calipers with Long Jaws

Specifications

Delivered	In a box

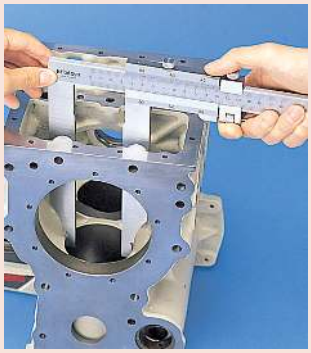

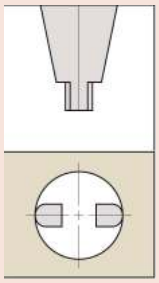

Rounded outside measuring surfaces for measuring inside dimensions

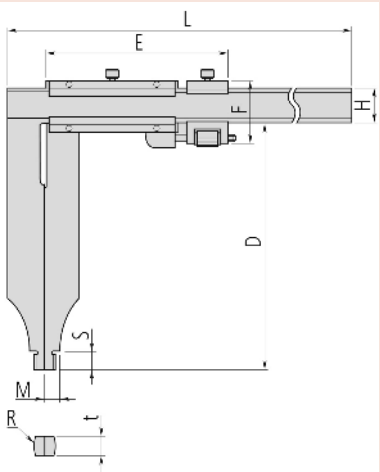

Series 534

These vernier calipers with long jaws come with or without fine adjustment and let you measure hard-to-reach features.
They offer you the following benefits:

- Long jaws enable you to measure hard-to-reach workpiece features.
- The top offset vernier scale allows you to directly read the inside dimensions without having to add the jaw blade width.

534-110

Metric — With fine adjustment

No.	Range [mm]	Graduation	Inside measuring from	Max. Permissible Error E MPE
534-113	0 - 300	0,02 mm	10,1 mm	±0,04 mm
534-114	0 - 500	0,02 mm	20,1 mm	±0,06 mm
534-115	0 - 750	0,02 mm	20,1 mm	±0,08 mm
534-116	0 - 1000	0,02 mm	20,1 mm	±0,1 mm

No.	Max. Permissible Error S MPE	Mass [g]	L [mm]	D [mm]	E [mm]	F [mm]	H [mm]	R [mm]	M [mm]	S [mm]	t [mm]
534-113	±0,04 mm	460	445	90	76,6	38	20	5	7	12	3,8
534-114	±0,06 mm	1500	682	200	89	51	25	10	12	18,5	6
534-115	±0,08 mm	2900	995	200	150	62,5	32	10	12	18,5	6
534-116	±0,1 mm	3500	1230	200	150	62,5	32	10	12	18,5	8

Metric — Without fine adjustment

No.	Range [mm]	Graduation	Inside measuring from	Max. Permissible Error E MPE
534-109	0 - 300	0,05 mm	10,1 mm	±0,07 mm
534-110	0 - 500	0,05 mm	20,1 mm	±0,13 mm

No.	Max. Permissible Error S MPE	Mass [g]	L [mm]	D [mm]	E [mm]	H [mm]	R [mm]	M [mm]	S [mm]	t [mm]
534-109	±0,07 mm	400	445	90	76,5	20	5	7	12	3,8
534-110	±0,13 mm	1400	682	200	89	25	10	12	18,5	6

All products to be sold to commercial customers.
Product illustrations are without obligation. Product descriptions, in particular any and all technical specifications, are only binding when explicitly agreed upon.

Mitutoyo

ABSOLUTE Digimatic Calipers with Constant Measuring Force

Series 573

ABSOLUTE®

The ABSOLUTE Digimatic calipers have a load cell and help you measure elastic workpieces.
They offer you the following benefits:

- Due to their low and constant measuring force these calipers are ideal for measuring elastic workpieces such as plastic and rubber parts that standard calipers cannot measure accurately.
- Large character height (alleviation of fatigue with the high-contrast LCD)
- The ABS (ABSOLUTE) scale requires no origin setting after power-on and also has no limit to response speed.
- Extraordinary battery life

573-191-30

Metric

No.	Range [mm]	Max. Permissible Error E MPE	Mass [g]
573-191-30	0 - 180	±0,05 mm	253

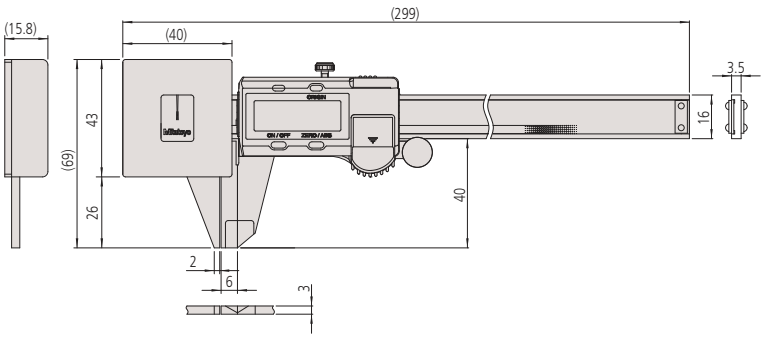

Functions	Series 573
ORIGIN (ABS-Zero)	■
ON/OFF	■
ABS / INC (INC ZERO)	■
Low voltage alarm	■
Data output	■

Specifications

Digital step	0,01 mm
Max. response speed	Unlimited
Measuring force	0.5-1 N
Jaw retraction	0,3 mm
Display	LCD, Character Height 9 mm
Delivered	In a case, including 1 battery
Battery life	Approx. 18000 hours

Optional accessories

No.	Description
959149	Digimatic Cable, Straight, Data Button,, 1m
959150	Digimatic Cable, Straight, Data Button,, 2m
06AFM380C	USB Input Tool Direct (Digimatic USB), Digi/Digi2, Straight, with Data Button
264-620	U-WAVE fit, IP67 Type, Wireless Transmitter for Caliper
264-621	U-WAVE fit, Buzzer Type, Wireless Transmitter for Caliper
264-624	U-WAVE fit Bluetooth, IP67 Type, Wireless Transmitter for Caliper
264-625	U-WAVE fit Bluetooth, Buzzer Type, Wireless Transmitter for Caliper
02AZF300	Connection Unit, U-WAVE fit, Standard Type
959143	Data Hold Unit

Consumable spares

No.	Description
938882	Battery SR44 1.5V

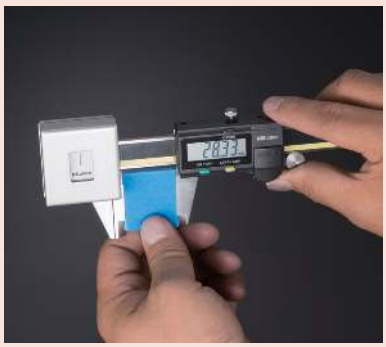

A consistently low measuring force can be guaranteed by only taking measurements when the pointer is between the two fiducial lines.

All products to be sold to commercial customers.
Product illustrations are without obligation. Product descriptions, in particular any and all technical specifications, are only binding when explicitly agreed upon.

ABSOLUTE Digimatic Calipers for Tolerance Measurement

Functions	Series 573
ORIGIN (ABS-Zero)	●
ON/OFF	●
ABS / INC (INC ZERO)	●
Low voltage alarm	●
Data output	●

Specifications

Digital step	0,01 mm
Max. response speed	Unlimited
Measuring force	7-14 N
Jaw retraction	2 mm
Display	LCD, Character height 9 mm
Delivered	In a case, including 1 battery
Battery life	Approx. 18000 hours

Optional accessories

No.	Description
959149	Digimatic Cable, Straight, Data Button,, 1m
959150	Digimatic Cable, Straight, Data Button,, 2m
06AFM380C	USB Input Tool Direct (Digimatic USB), Digi/Digi2, Straight, with Data Button
264-620	U-WAVE fit, IP67 Type, Wireless Transmitter for Caliper
264-621	U-WAVE fit, Buzzer Type, Wireless Transmitter for Caliper
264-624	U-WAVE fit Bluetooth, IP67 Type, Wireless Transmitter for Caliper
264-625	U-WAVE fit Bluetooth, Buzzer Type, Wireless Transmitter for Caliper
02AZF310	Connection Unit, U-WAVE fit, Waterproof Type
959143	Data Hold Unit

Consumable spares

No.	Description
938882	Battery SR44 1.5V

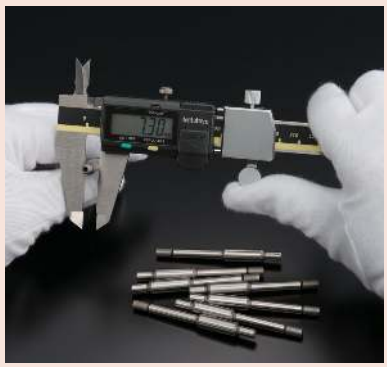

Series 573

ABSOLUTE®

The ABSOLUTE Digimatic snap caliper for tolerance measurement features a spring-loaded mechanism to allow quick and efficient GO/±NO-GO inspection for mass produced parts.

- Large character height (alleviation of fatigue with the high-contrast LCD)
- The ABS (ABSOLUTE) scale requires no origin setting after power-on and also has no limit to response speed.
- Extraordinary battery life

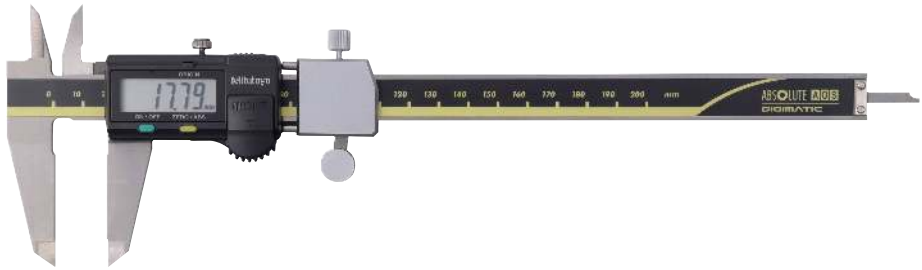

573-182-30

Metric

No.	Range [mm]	Max. Permissible Error E MPE	Max. Permissible Error S MPE	Mass [g]	L [mm]	a [mm]	b [mm]	c [mm]	d [mm]
573-181-30	0 - 100	±0,02 mm	±0,04 mm	213	233	40	21	16,5	16
573-182-30	0 - 150	±0,02 mm	±0,04 mm	233	290	50	24,5	20	16

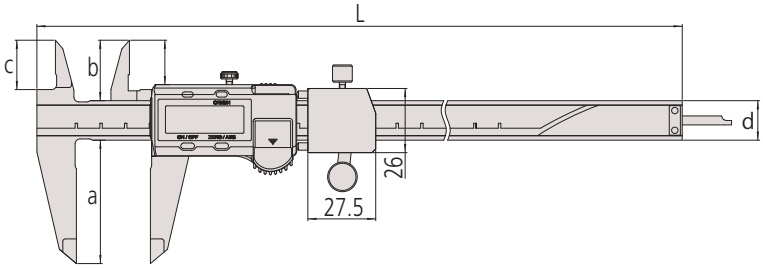

All products to be sold to commercial customers.
Product illustrations are without obligation. Product descriptions, in particular any and all technical specifications, are only binding when explicitly agreed upon.

Mitutoyo

Scribing Calipers with Carbide Tipped Jaws

Series 573

These Calipers are designed for scribing tasks.

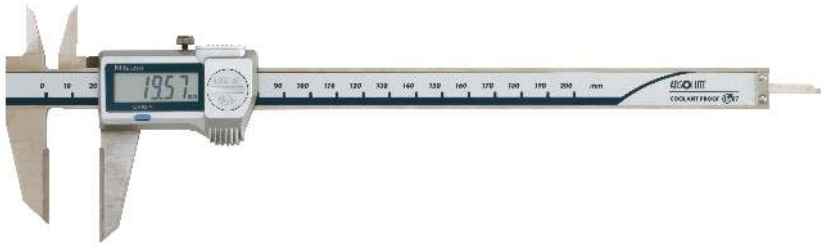

573-677-20

Metric

No.	Range [mm]	Max. Permissible Error E MPE	Max. Permissible Error S MPE	Mass [g]	L [mm]	a [mm]	b [mm]	c [mm]	d [mm]	e [mm]
573-676-20	0 - 150	±0,02 mm	±0,04 mm	166	229	46	21,5	17	16	33
573-677-20	0 - 200	±0,02 mm	±0,04 mm	196	288	50	25	20,5	16	43
573-679-20	0 - 300	±0,03 mm	±0,05 mm	360	404	64	27,5	22	20	54

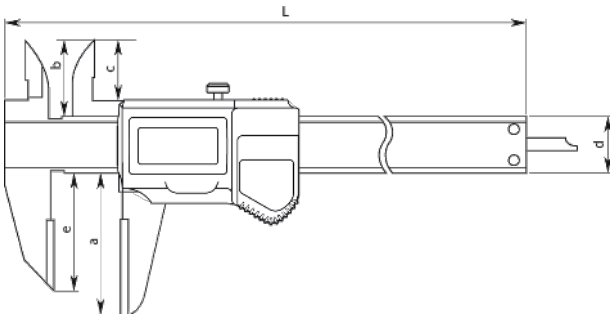

Sample application

Functions	Series 573
ORIGIN (ABS-Zero)	●
Auto Power OFF after 20 min. non use	●
Low voltage alarm	●
Data output	●

Specifications

Digital step	0,01 mm
Max. response speed	Unlimited
Display	LCD, Character Height 9 mm (150, 200 mm) 11 mm (300 mm)
Delivered	In a case, including 1 battery
Battery life	Approx. 5 years under normal use

Optional accessories

No.	Description
05CZA624	Digimatic Cable with Data Button IP Type, 1m, Caliper Type
05CZA625	Digimatic Cable with Data Button IP Type, 2m, Caliper Type
06AFM380A	USB Input Tool Direct (Digimatic USB), Digi/Digi2, With Data Button IP Caliper Type
264-620	U-WAVE fit, IP67 Type, Wireless Transmitter for Caliper
264-621	U-WAVE fit, Buzzer Type, Wireless Transmitter for Caliper
264-624	U-WAVE fit Bluetooth, IP67 Type, Wireless Transmitter for Caliper
264-625	U-WAVE fit Bluetooth, Buzzer Type, Wireless Transmitter for Caliper
02AZF310	Connection Unit, U-WAVE fit, Waterproof Type

Consumable spares

No.	Description
938882	Battery SR44 1.5V

Series 536

These Calipers are designed for scribing tasks.

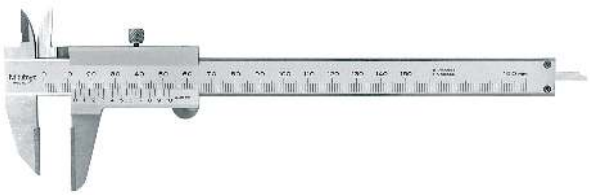

536-221

Metric

No.	Range [mm]	Max. Permissible Error E MPE	Max. Permissible Error S MPE	Graduation	Mass [g]	L [mm]	a [mm]	b [mm]	c [mm]	d [mm]	e [mm]
536-221	0 - 150	±0,05 mm	±0,07 mm	0,05 mm	150	229	40	21,5	17	16	33
536-222	0 - 200	±0,05 mm	±0,07 mm	0,05 mm	180	288	50	25	20,5	16	43
536-223	0 - 300	±0,08 mm	±0,1 mm	0,05 mm	400	403	64	27,5	22	20	54

Specifications

Delivered	In a case

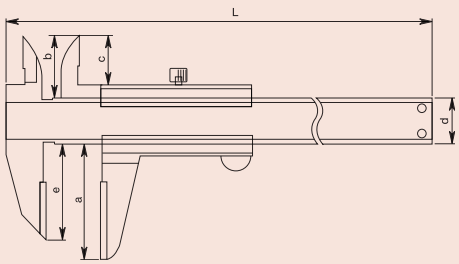

All products to be sold to commercial customers.
Product illustrations are without obligation. Product descriptions, in particular any and all technical specifications, are only binding when explicitly agreed upon.

Offset Calipers

Functions	Series 573
ORIGIN (ABS-Zero)	■
Auto Power OFF after 20 min. non use	■
Low voltage alarm	■
Data output	■

Specifications

Digital step	0,01 mm
Max. response speed	Unlimited
Display	LCD, Character Height 9 mm (150 mm, 200 mm) 11 mm (300 mm)
Delivered	In a case, including 1 battery
Battery life	Approx. 5 years under normal use

Optional accessories

No.	Description
05CZA624	Digimatic Cable with Data Button IP Type, 1m, Caliper Type
05CZA625	Digimatic Cable with Data Button IP Type, 2m, Caliper Type
06AFM380A	USB Input Tool Direct (Digimatic USB), Digi/Digi2, With Data Button IP Caliper Type
264-620	U-WAVE fit, IP67 Type, Wireless Transmitter for Caliper
264-621	U-WAVE fit, Buzzer Type, Wireless Transmitter for Caliper
264-624	U-WAVE fit Bluetooth, IP67 Type, Wireless Transmitter for Caliper
264-625	U-WAVE fit Bluetooth, Buzzer Type, Wireless Transmitter for Caliper
02AZF310	Connection Unit, U-WAVE fit, Waterproof Type

Consumable spares

No.	Description
938882	Battery SR44 1.5V

Specifications

Delivered	In a case

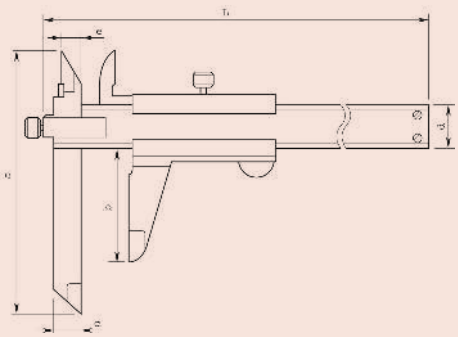

Series 573

These offset calipers enable you to measure stepped workpieces. They offer you the following benefits:

- You can adjust the beam-mounted jaw to facilitate measurement of stepped sections and hard-to-reach workpiece features.

573-602-20

Metric — Without thumb roller

No.	Range [mm]	Max. Permissible Error E MPE	Max. Permissible Error S MPE	Mass [g]	a [mm]	b [mm]	c [mm]	d [mm]
573-611-20	0 - 150	±0,02 mm	±0,04 mm	168	95	10	40	30
573-612-20	0 - 200	±0,02 mm	±0,04 mm	198	95	10	50	38,5
573-614-20	0 - 300	±0,03 mm	±0,05 mm	380	135	15	64	51

Metric — With thumb roller

No.	Range [mm]	Max. Permissible Error E MPE	Max. Permissible Error S MPE	Mass [g]	a [mm]	b [mm]	c [mm]	d [mm]
573-601-20	0 - 150	±0,02 mm	±0,04 mm	168	95	10	40	30
573-602-20	0 - 200	±0,02 mm	±0,04 mm	198	95	10	50	38,5
573-604-20	0 - 300	±0,03 mm	±0,05 mm	970	135	15	64	51

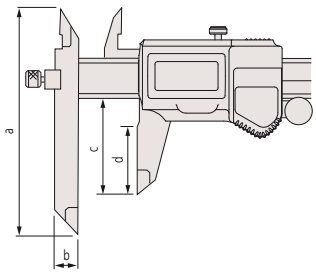

Series 536

These Offset Calipers enables you to measure stepped workpieces and offers you the following benefits:

- The beam-mounted jaw is adjustable to facilitate the measurement of stepped sections and hard-to-reach workpiece features.

Metric

No.	Range [mm]	Max. Permissible Error E MPE	Max. Permissible Error S MPE	Graduation	Mass [g]	L [mm]	a [mm]	b [mm]	c [mm]	d [mm]	e [mm]
536-101	0 - 150	±0,05 mm	±0,07 mm	0,05 mm	150	229	95	40	10	16	7,5
536-102	0 - 200	±0,05 mm	±0,07 mm	0,05 mm	200	286	95	50	10	16	8,5
536-103	0 - 300	±0,08 mm	±0,1 mm	0,05 mm	400	403	135	64	15	20	12

All products to be sold to commercial customers.
Product illustrations are without obligation. Product descriptions, in particular any and all technical specifications, are only binding when explicitly agreed upon.

Offset Centerline Calipers

Series 573

These offset centreline calipers enable you to measure centre to centre distance.
They offer you the following benefits:

- Specially designed for hole centre-to-centre measurements in the same plane, or between offset planes.
- You can also measure from an edge to a hole centre.

573-606-20

Metric — Without thumb roller

No.	Range [mm]	Max. Permissible Error S MPE	Mass [g]	a [mm]	t [mm]
573-615-20	10,1 - 160	±0,03 mm	157	75	3,5
573-616-20	10,1 - 210	±0,03 mm	177	75	3,5
573-618-20	10,1 - 300	±0,04 mm	335	100	3,8

Metric — With thumb roller

No.	Range [mm]	Max. Permissible Error S MPE	Mass [g]	a [mm]	t [mm]
573-605-20	10,1 - 160	±0,03 mm	157	75	3,5
573-606-20	10,1 - 210	±0,03 mm	177	75	3,5
573-608-20	10,1 - 300	±0,04 mm	340	100	3,8

mm

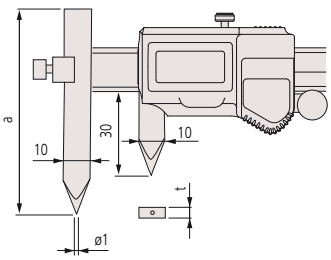

Functions	Series 573
ORIGIN (ABS-Zero)	●
Auto Power OFF after 20 min. non use	●
Low voltage alarm	●
Data output	●

Specifications

Digital step	0,01 mm
Max. response speed	Unlimited
Display	LCD, Character Height 9 mm (150 mm, 200 mm) 11 mm (300 mm)
Delivered	In a case, including 1 battery
OFFSET	10 mm
Battery life	Approx. 5 years under normal use

Optional accessories

No.	Description
05CZA624	Digimatic Cable with Data Button IP Type, 1m, Caliper Type
05CZA625	Digimatic Cable with Data Button IP Type, 2m, Caliper Type
06AFM380A	USB Input Tool Direct (Digimatic USB), Digi/Digi2, With Data Button IP Caliper Type
264-620	U-WAVE fit, IP67 Type, Wireless Transmitter for Caliper
264-621	U-WAVE fit, Buzzer Type, Wireless Transmitter for Caliper
264-624	U-WAVE fit Bluetooth, IP67 Type, Wireless Transmitter for Caliper
264-625	U-WAVE fit Bluetooth, Buzzer Type, Wireless Transmitter for Caliper
02AZF310	Connection Unit, U-WAVE fit, Waterproof Type

Consumable spares

No.	Description
938882	Battery SR44 1.5V

Series 536

This Offset Centerline Caliper enables you to measure center-to-center distance and offers you the following benefits:

- Center-to-center measurements for holes on the same plane or between offset planes
- Edge to center measurements

536-106

Metric

No.	Range [mm]	Max. Permissible Error S MPE	Graduation	Mass [g]	L [mm]	a [mm]	d [mm]	t [mm]
536-105	10,1 - 150	±0,05 mm	0,05 mm	140	229	75	16	3
536-106	10,1 - 200	±0,05 mm	0,05 mm	160	282	75	16	3
536-107	10,1 - 300	±0,08 mm	0,05 mm	320	383	100	20	3,8

Specifications

Delivered	In a case

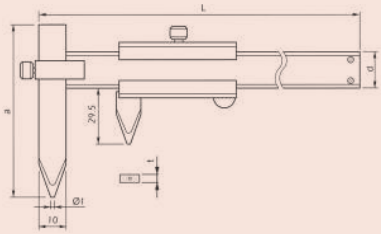

All products to be sold to commercial customers.
Product illustrations are without obligation. Product descriptions, in particular any and all technical specifications, are only binding when explicitly agreed upon.

Swivel Calipers

Specifications

Delivered	In a case

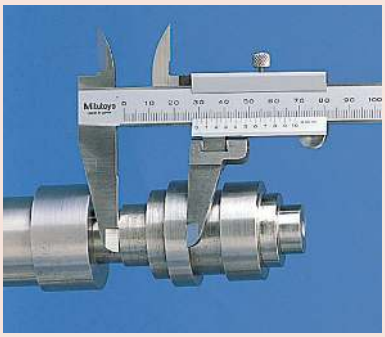

Series 536

These Vernier Calipers have a swivelling jaw. They offer you the following benefits:

- You can rotate the moving jaw to measure sectioned shafts.
- With depth bar.

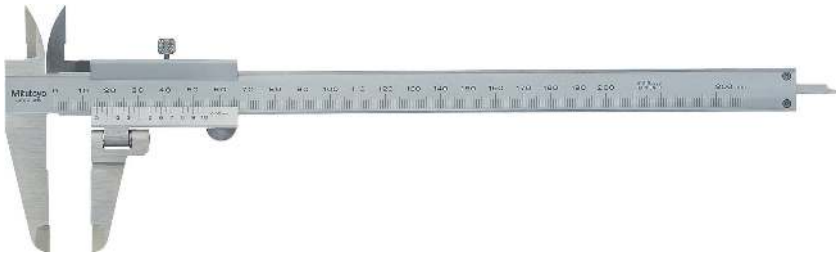

536-212

Metric

No.	Range [mm]	Max. Permissible Error E MPE	Max. Permissible Error S MPE	Graduation	Remarks	Mass [g]
536-212	0 - 200	±0,05 mm	±0,07 mm	0,05 mm	Swivel range ±90°	190

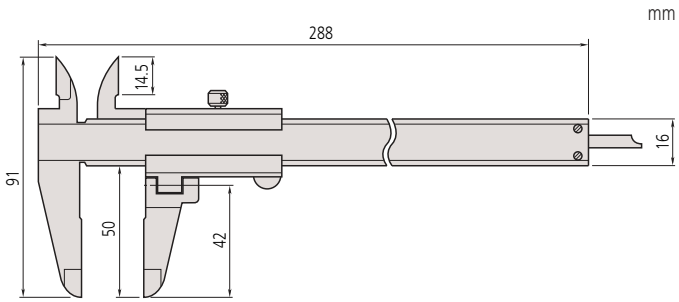

All products to be sold to commercial customers.
Product illustrations are without obligation. Product descriptions, in particular any and all technical specifications, are only binding when explicitly agreed upon.

ABSOLUTE Digimatic Back-Jaw Centreline Calipers

Series 573

The ABSOLUTE Digimatic back-jaw centreline calipers offer you the following benefits:

- Specially designed to allow you to measure hole centre-to-centre or edge-to-centre distances.
- You can read measurements more easily from above, thanks to the jaws being on the back of the slide.
- Direct reading of pitch measurements is also available due to the offset value setting function.

Safety Dust- and Water-Protected
TÜVRheinland CERTIFIED
www.tuv.com ID 2011207400

ABSOLUTE®
IP67

573-716-20
Centre-to-centre type

573-718-20
Edge-to-centre type

Metric — Centre-to-centre type

No.	Range [mm]	Max. Permissible Error S MPE	Mass [g]
573-716-20	10,1 - 200	±0,1 mm	465
573-717-20	10,1 - 300	±0,15 mm	550

Metric — Edge-to-centre type

No.	Range [mm]	Max. Permissible Error S MPE	Mass [g]
573-718-20	10,1 - 200	±0,1 mm	470
573-719-20	10,1 - 300	±0,15 mm	555

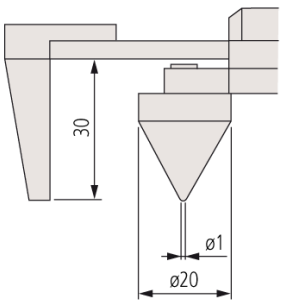

573-718-20
573-719-20

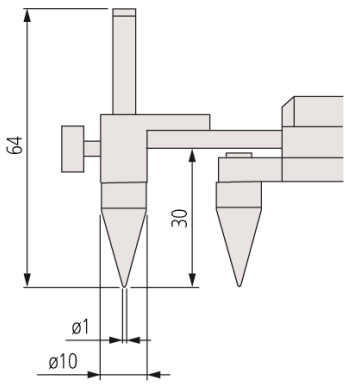

573-716-20
573-717-20

Functions	Series 573
ORIGIN (ABS-Zero)	●
PRESET	●
ABS / INC (INC ZERO)	●
Low voltage alarm	●
Data output	●

Specifications

Digital step	0,01 mm
Max. response speed	Unlimited
Display	LCD, character height 11 mm
Delivered	In a case, including 1 battery
OFFSET	10 mm
Battery life	Approx. 5 years under normal use

Optional accessories

No.	Description
05CZA624	Digimatic Cable with Data Button IP Type, 1m, Caliper Type
05CZA625	Digimatic Cable with Data Button IP Type, 2m, Caliper Type
06AFM380A	USB Input Tool Direct (Digimatic USB), Digi/Digi2, With Data Button IP Caliper Type
02AZD730G	U-WAVE-T, IP67 Type, Wireless Transmitter
02AZD880G	U-WAVE-T, Buzzer Type, Wireless Transmitter
02AZD790A	U-WAVE-T Connection Cable A, with Data Button IP Caliper Type

Consumable spares

No.	Description
938882	Battery SR44 1.5V

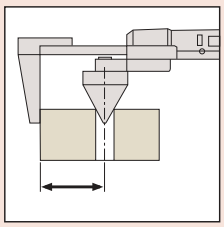

Edge-to-center type

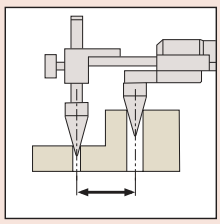

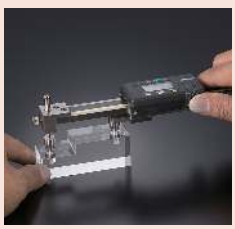

Centre-to-centre type

All products to be sold to commercial customers.
Product illustrations are without obligation. Product descriptions, in particular any and all technical specifications, are only binding when explicitly agreed upon.

Point Calipers

Functions	Series 573
ORIGIN (ABS-Zero)	●
Auto Power OFF after 20 min. non use	●
Low voltage alarm	●
Data output	●

Specifications

Digital step	0,01 mm
Max. response speed	Unlimited
Display	LCD, Character Height 9 mm
Delivered	In a case, including 1 battery
Battery life	Approx. 5 years under normal use

Optional accessories

No.	Description
05CZA624	Digimatic Cable with Data Button IP Type, 1m, Caliper Type
05CZA625	Digimatic Cable with Data Button IP Type, 2m, Caliper Type
06AFM380A	USB Input Tool Direct (Digimatic USB), Digi/Digi2, With Data Button IP Caliper Type
264-620	U-WAVE fit, IP67 Type, Wireless Transmitter for Caliper
264-621	U-WAVE fit, Buzzer Type, Wireless Transmitter for Caliper
264-624	U-WAVE fit Bluetooth, IP67 Type, Wireless Transmitter for Caliper
264-625	U-WAVE fit Bluetooth, Buzzer Type, Wireless Transmitter for Caliper
02AZF310	Connection Unit, U-WAVE fit, Waterproof Type

Consumable spares

No.	Description
938882	Battery SR44 1.5V

Specifications

Delivered	In a case

mm

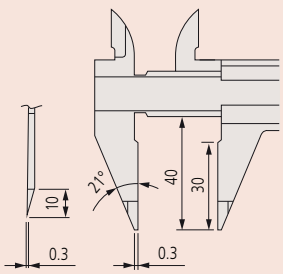

Series 573

These point calipers have extra fine ground measuring jaws. They offer you the following benefits:

- Narrow-tip jaws fit into very small grooves and tracks, making it much easier for you to obtain many previously difficult outside measurements.

573-621-20
Fine measuring jaws

Metric — Fine measuring jaws

No.	Range [mm]	Thumb roller	Max. Permissible Error E MPE	Max. Permissible Error S MPE	Mass [g]
573-621-20	0 - 150	●	±0,02 mm	±0,04 mm	163
573-622-20	0 - 150		±0,02 mm	±0,04 mm	163

Metric — Pointed measuring jaws

No.	Range [mm]	Thumb roller	Max. Permissible Error E MPE	Max. Permissible Error S MPE	Mass [g]
573-625-20	0 - 150	●	±0,02 mm	±0,04 mm	163
573-626-20	0 - 150		±0,02 mm	±0,04 mm	163

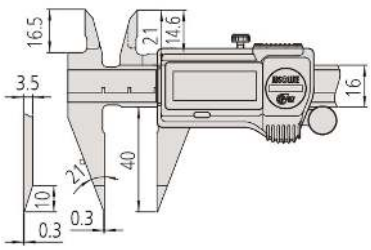

Fine measuring jaws

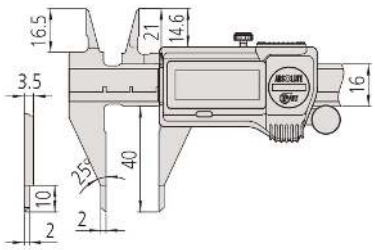

Pointed measuring jaws

Series 536

These Vernier Point Calipers have extra fine ground measuring jaws. It offers you the following benefits:

- Narrow-tip jaws fit into very small grooves and tracks, making it much easier for you to obtain many previously difficult outside measurements.

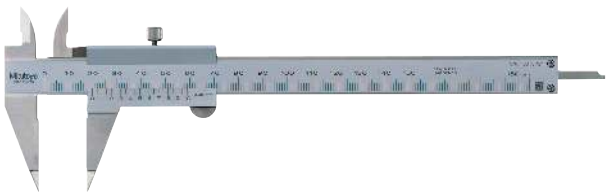

536-121

Metric

No.	Range [mm]	Max. Permissible Error E MPE	Max. Permissible Error S MPE	Graduation	Mass [g]
536-121	0 - 150	±0,05 mm	±0,07 mm	0,05 mm	150

All products to be sold to commercial customers.
Product illustrations are without obligation. Product descriptions, in particular any and all technical specifications, are only binding when explicitly agreed upon.

Mitutoyo

Blade Calipers

Series 573

These blade calipers have thin measuring jaws. They offer you the following benefits:

- The thin blade-type jaws fit into very small grooves making it much easier for you to obtain many previously difficult outside measurements.
- The outside measuring faces are carbide.

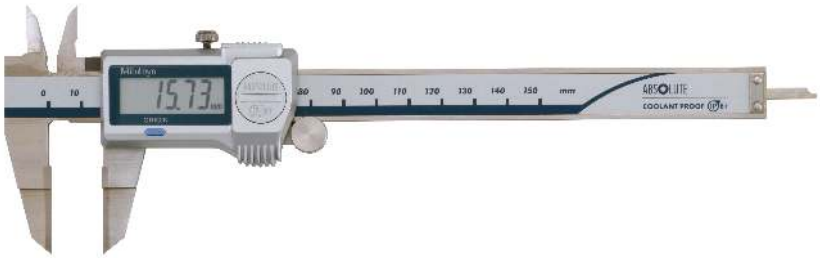

573-634-20

Metric

No.	Range [mm]	Thumb roller	Max. Permissible Error E MPE	Max. Permissible Error S MPE	Mass [g]
573-634-20	0 - 150	●	±0,02 mm	±0,04 mm	168
573-635-20	0 - 150		±0,02 mm	±0,04 mm	168

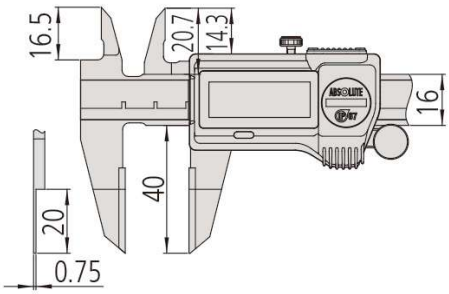

Series 536

These Blade Calipers have thin measuring jaws. They offer you the following benefits:

- The thin blade-type jaws fit into very small grooves making it much easier for you to obtain many previously difficult outside measurements.
- The outside measuring faces are carbide.

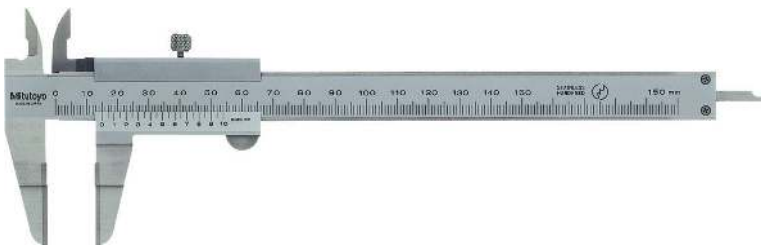

536-134

Metric

No.	Range [mm]	Max. Permissible Error E MPE	Max. Permissible Error S MPE	Graduation	Mass [g]	L [mm]	a [mm]	b [mm]	c [mm]	d [mm]	e [mm]
536-134	0 - 150	±0,05 mm	±0,07 mm	0,05 mm	140	229	20	40	0,75	16	3
536-135	0 - 200	±0,05 mm	±0,07 mm	0,05 mm	180	286	25	50	0,75	16	3
536-136	0 - 300	±0,08 mm	±0,1 mm	0,05 mm	420	403	30	64	1	16	3,8

Safety Dust- and Water-Protected
TÜVRheinland CERTIFIED
www.tuv.com ID 2011207400

ABSOLUTE IP67

Functions	Series 573
ORIGIN (ABS-Zero)	●
Auto Power OFF after 20 min. non use	●
Low voltage alarm	●
Data output	●

Specifications

Digital step	0,01 mm
Max. response speed	Unlimited
Display	LCD, Character Height 9 mm
Delivered	In a case, including 1 battery
Battery life	Approx. 5 years under normal use

Optional accessories

No.	Description
05CZA624	Digimatic Cable with Data Button IP Type, 1m, Caliper Type
05CZA625	Digimatic Cable with Data Button IP Type, 2m, Caliper Type
06AFM380A	USB Input Tool Direct (Digimatic USB), Digi/Digi2, With Data Button IP Caliper Type
264-620	U-WAVE fit, IP67 Type, Wireless Transmitter for Caliper
264-621	U-WAVE fit, Buzzer Type, Wireless Transmitter for Caliper
264-624	U-WAVE fit Bluetooth, IP67 Type, Wireless Transmitter for Caliper
264-625	U-WAVE fit Bluetooth, Buzzer Type, Wireless Transmitter for Caliper
02AZF310	Connection Unit, U-WAVE fit, Waterproof Type

Consumable spares

No.	Description
938882	Battery SR44 1.5V

Specifications

Delivered	In a case

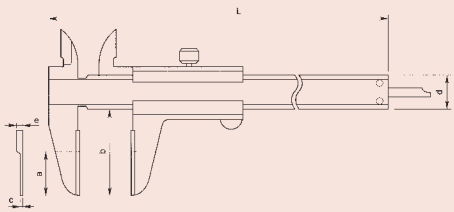

All products to be sold to commercial customers.
Product illustrations are without obligation. Product descriptions, in particular any and all technical specifications, are only binding when explicitly agreed upon.

Neck Calipers

Series 573

These neck calipers enable measurements in hard to reach places. They offer you the following benefits:

- You can measure wall thickness inside bores and recesses.

Functions	Series 573
ORIGIN (ABS-Zero)	●
Auto Power OFF after 20 min. non use	●
Low voltage alarm	●
Data output	●

Specifications

Digital step	0,01 mm
Max. response speed	Unlimited
Display	LCD, Character Height 9 mm
Delivered	In a case, including 1 battery
Battery life	Approx. 5 years under normal use

Optional accessories

No.	Description
05CZA624	Digimatic Cable with Data Button IP Type, 1m, Caliper Type
05CZA625	Digimatic Cable with Data Button IP Type, 2m, Caliper Type
06AFM380A	USB Input Tool Direct (Digimatic USB), Digi/Digi2, With Data Button IP Caliper Type
264-620	U-WAVE fit, IP67 Type, Wireless Transmitter for Caliper
264-621	U-WAVE fit, Buzzer Type, Wireless Transmitter for Caliper
264-624	U-WAVE fit Bluetooth, IP67 Type, Wireless Transmitter for Caliper
264-625	U-WAVE fit Bluetooth, Buzzer Type, Wireless Transmitter for Caliper
02AZF310	Connection Unit, U-WAVE fit, Waterproof Type

Consumable spares

No.	Description
938882	Battery SR44 1.5V

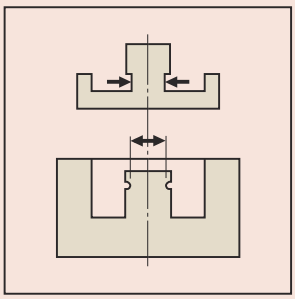

573-651-20

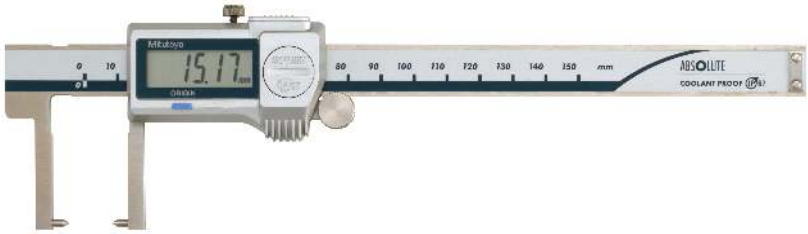

573-652-20
Point jaw type

Metric

No.	Range [mm]	Thumb roller	Max. Permissible Error E MPE	Mass [g]
573-651-20	0 - 150	●	±0,03 mm	157
573-653-20	0 - 150		±0,03 mm	157

Metric Point jaw type

No.	Range [mm]	Thumb roller	Max. Permissible Error E MPE	Mass [g]
573-652-20	0 - 150	●	±0,03 mm	157
573-654-20	0 - 150		±0,03 mm	157

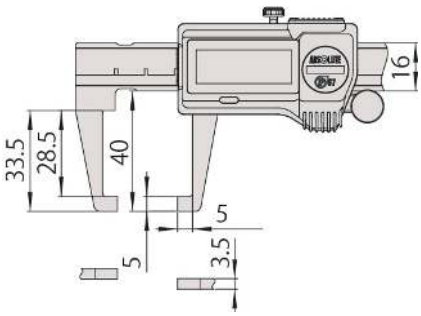

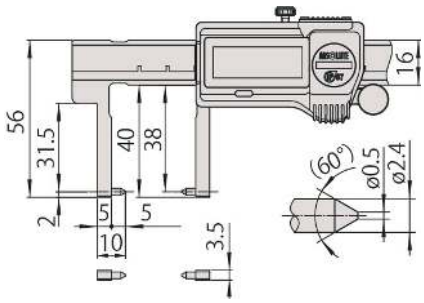

Point jaw type

All products to be sold to commercial customers.
Product illustrations are without obligation. Product descriptions, in particular any and all technical specifications, are only binding when explicitly agreed upon.

Neck Calipers

Series 536

These Neck Calipers enable measurements in hard to reach places.
They offer you the following benefits:

- You can measure wall thickness inside bores and recesses.

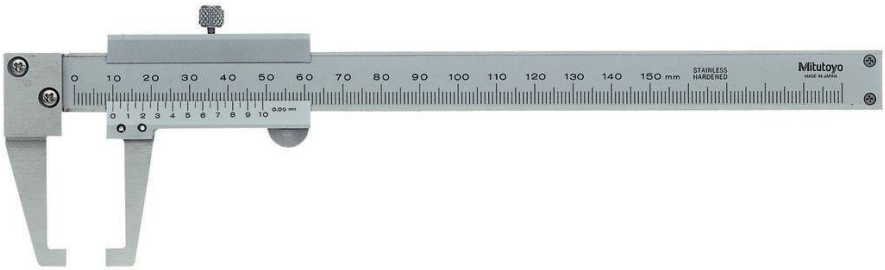

536-151

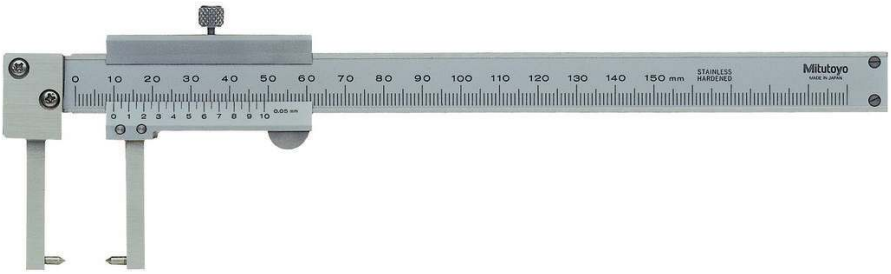

536-152
Point jaw type

Specifications

Delivered	In a case

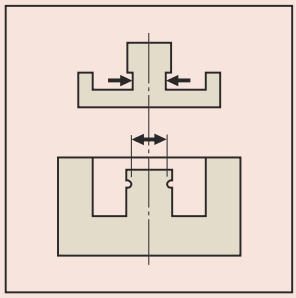

Metric

No.	Range [mm]	Max. Permissible Error E MPE	Graduation	Mass [g]
536-151	0 - 150	±0,05 mm	0,05 mm	140

Metric

Point jaw type

No.	Range [mm]	Max. Permissible Error E MPE	Graduation	Mass [g]	L [mm]	a [mm]	b [mm]	c [mm]	d [mm]	e [mm]
536-152	0 - 150	±0,05 mm	0,05 mm	140	229	38	5	5	16	2

mm

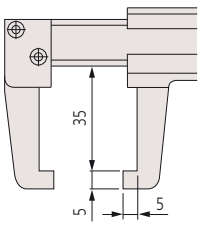

536-151

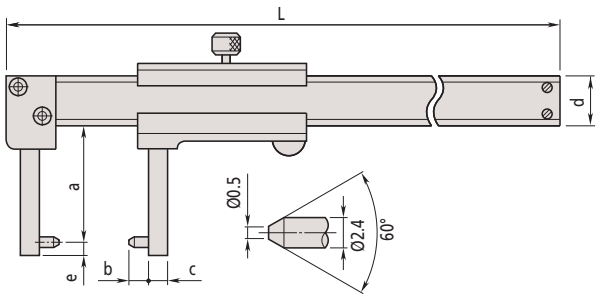

536-152
Point jaw type

All products to be sold to commercial customers.
Product illustrations are without obligation. Product descriptions, in particular any and all technical specifications, are only binding when explicitly agreed upon.

Knife-Edge Calipers

Functions	Series 573
ORIGIN (ABS-Zero)	●
Auto Power OFF after 20 min. non use	●
Low voltage alarm	●
Data output	●

Specifications

Digital step	0,01 mm
Max. response speed	Unlimited
Display	LCD, Character Height 9 mm
Delivered	In a case, including 1 battery
Battery life	Approx. 5 years under normal use

Optional accessories

No.	Description
05CZA624	Digimatic Cable with Data Button IP Type, 1m, Caliper Type
05CZA625	Digimatic Cable with Data Button IP Type, 2m, Caliper Type
06AFM380A	USB Input Tool Direct (Digimatic USB), Digi/Digi2, With Data Button IP Caliper Type
02AZD880G	U-WAVE-T, Buzzer Type, Wireless Transmitter
02AZD730G	U-WAVE-T, IP67 Type, Wireless Transmitter
02AZD790A	U-WAVE-T Connection Cable A, with Data Button IP Caliper Type

Consumable spares

No.	Description
938882	Battery SR44 1.5V

Specifications

Delivered	In a case

mm

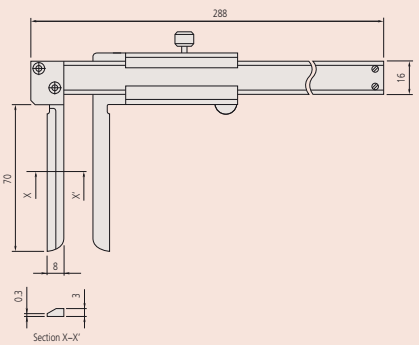

Series 573

These Digital Knife Edge Caliper offer you the following benefits:
- Specially designed to let you take inside measurements in hard-to-reach places.
- With long narrow jaws.

573-642-20

Metric

No.	Range [mm]	Thumb roller	Max. Permissible Error S MPE	Mass [g]
573-642-20	10,1 - 200	●	±0,05 mm	227
573-643-20	10,1 - 200		±0,05 mm	227

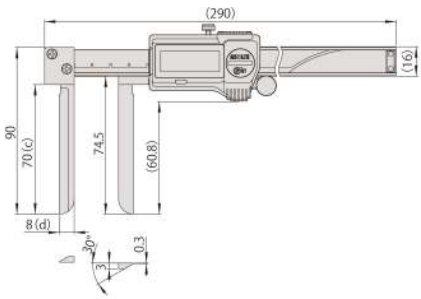

Series 536

This Analog Knife Edge Caliper offer you the following benefits:
- Specially designed to let you take inside measurements in hard-to-reach places.
- With long narrow jaws.

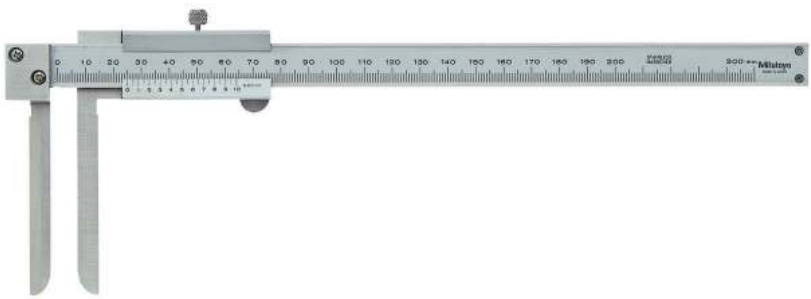

536-142

Metric

No.	Range [mm]	Max. Permissible Error S MPE	Graduation	Mass [g]
536-142	10,1 - 200	±0,12 mm	0,05 mm	210

All products to be sold to commercial customers.
Product illustrations are without obligation. Product descriptions, in particular any and all technical specifications, are only binding when explicitly agreed upon.

Inside Calipers

Series 573

These inside calipers enable measurements inside a groove
They offer you the following benefits:
- Specially designed for measurements in hard-to-reach places.

Safety Dust- and Water-Protected
TÜVRheinland CERTIFIED
www.tuv.com ID 2011207400

ABSOLUTE®
IP67

573-645-20

573-646-20
Point jaw type

Metric

No.	Range [mm]	Thumb roller	Max. Permissible Error S MPE	OFFSET	Mass [g]
573-645-20	10,1 - 160	●	±0,05 mm	10 mm	147
573-647-20	10,1 - 160		±0,05 mm	10 mm	147

Metric Point jaw type

No.	Range [mm]	Thumb roller	Max. Permissible Error S MPE	OFFSET	Mass [g]
573-646-20	20,1 - 170	●	±0,03 mm	20 mm	157
573-648-20	20,1 - 170		±0,03 mm	20 mm	157

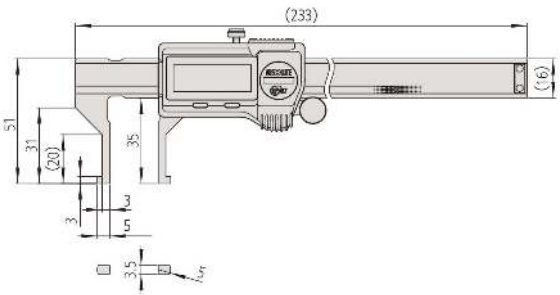

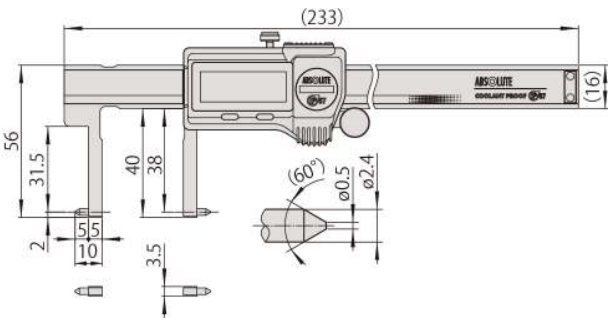

Point jaw type

Functions	Series 573
ORIGIN (ABS-Zero)	●
Auto Power OFF after 20 min. non use	●
Low voltage alarm	●
Data output	●

Specifications

Digital step	0,01 mm
Max. response speed	Unlimited
Display	LCD, Character Height 9 mm
Delivered	In a case, including 1 battery
Battery life	Approx. 5 years under normal use

Optional accessories

No.	Description
05CZA624	Digimatic Cable with Data Button IP Type, 1m, Caliper Type
05CZA625	Digimatic Cable with Data Button IP Type, 2m, Caliper Type
06AFM380A	USB Input Tool Direct (Digimatic USB), Digi/Digi2, With Data Button IP Caliper Type
264-620	U-WAVE fit, IP67 Type, Wireless Transmitter for Caliper
264-621	U-WAVE fit, Buzzer Type, Wireless Transmitter for Caliper
264-624	U-WAVE fit Bluetooth, IP67 Type, Wireless Transmitter for Caliper
264-625	U-WAVE fit Bluetooth, Buzzer Type, Wireless Transmitter for Caliper
02AZF310	Connection Unit, U-WAVE fit, Waterproof Type

Consumable spares

No.	Description
938882	Battery SR44 1.5V

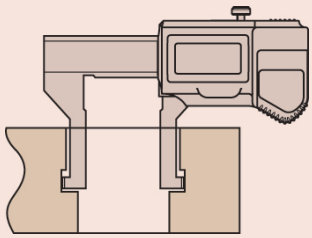

* 20 mm

All products to be sold to commercial customers.
Product illustrations are without obligation. Product descriptions, in particular any and all technical specifications, are only binding when explicitly agreed upon.

Inside Calipers

Specifications

Delivered	In a case

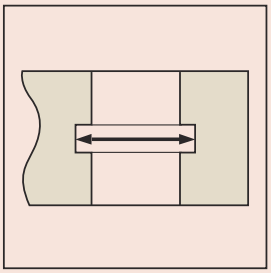

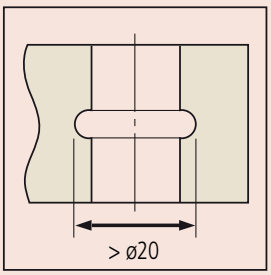

Series 536

- Specially designed for inside measurements in hard-to-reach places.

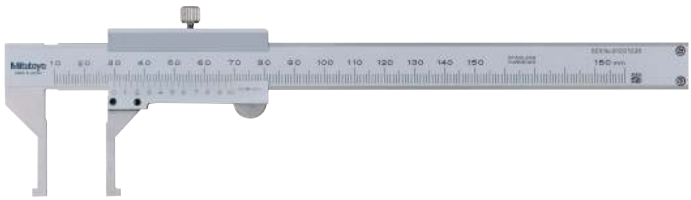

536-145

536-146
Point jaw type

Metric

No.	Range [mm]	Max. Permissible Error S MPE	Graduation	Mass [g]
536-145	10,1 - 150	±0,05 mm	0,05 mm	130

Metric Point jaw type

No.	Range [mm]	Max. Permissible Error S MPE	Graduation	Mass [g]	L [mm]	c [mm]	d [mm]	e [mm]	f [mm]	g [mm]	H [mm]
536-146	20,1 - 150	±0,05 mm	0,05 mm	140	229	38	31	5	5	2	16
536-147	30,1 - 300	±0,08 mm	0,05 mm	370	403	98	89	5	10	2	20
536-148	70,1 - 450	±0,1 mm	0,05 mm	1250	610	145	136	10	25	5	25
536-149	70,1 - 600	±0,12 mm	0,05 mm	1430	750	145	136	10	25	5	25

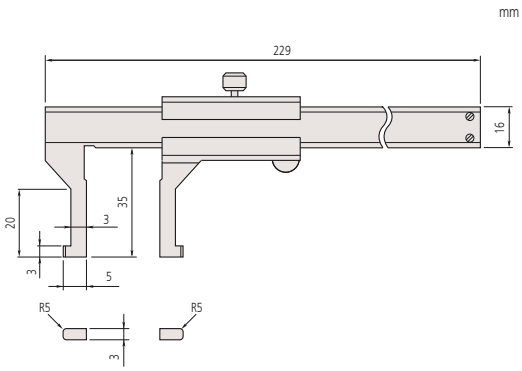

536-145

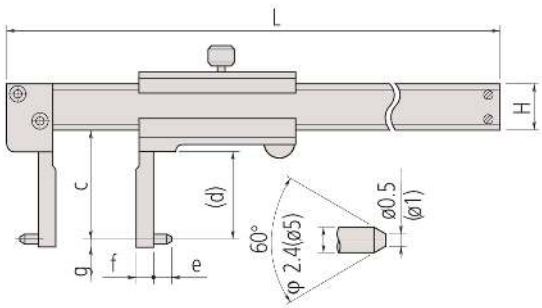

Point jaw type

All products to be sold to commercial customers.
Product illustrations are without obligation. Product descriptions, in particular any and all technical specifications, are only binding when explicitly agreed upon.

Mitutoyo

Tube Thickness Calipers

Series 573

These tube thickness calipers are designed especially for round-shaped workpieces.
They offer you the following benefits:

- The beam-mounted jaw is a round bar that lets you easily measure tube wall thickness.

573-661-20

Metric

No.	Range [mm]	Thumb roller	Max. Permissible Error E MPE	Mass [g]
573-661-20	0 - 150	●	±0,05 mm	167
573-662-20	0 - 150		±0,05 mm	167

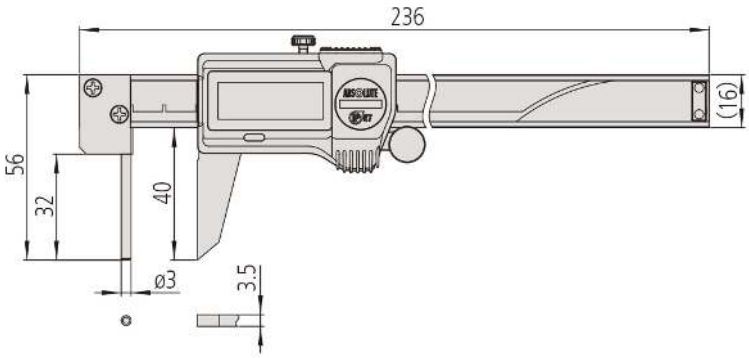

Functions	Series 573
ORIGIN (ABS-Zero)	●
Auto Power OFF after 20 min. non use	●
Low voltage alarm	●
Data output	●

Specifications

Digital step	0,01 mm
Max. response speed	Unlimited
Display	LCD, Character Height 9 mm
Delivered	In a case, including 1 battery
Battery life	Approx. 5 years under normal use

Optional accessories

No.	Description
05CZA624	Digimatic Cable with Data Button IP Type, 1m, Caliper Type
05CZA625	Digimatic Cable with Data Button IP Type, 2m, Caliper Type
06AFM380A	USB Input Tool Direct (Digimatic USB), Digi/Digi2, With Data Button IP Caliper Type
264-620	U-WAVE fit, IP67 Type, Wireless Transmitter for Caliper
264-621	U-WAVE fit, Buzzer Type, Wireless Transmitter for Caliper
264-624	U-WAVE fit Bluetooth, IP67 Type, Wireless Transmitter for Caliper
264-625	U-WAVE fit Bluetooth, Buzzer Type, Wireless Transmitter for Caliper
02AZF310	Connection Unit, U-WAVE fit, Waterproof Type

Consumable spares

No.	Description
938882	Battery SR44 1.5V

Series 536

These Tube Thickness Calipers are designed especially for round-shaped workpieces.
They offer you the following benefits:

- The beam-mounted jaw is a round bar that lets you easily measure tube wall thickness.

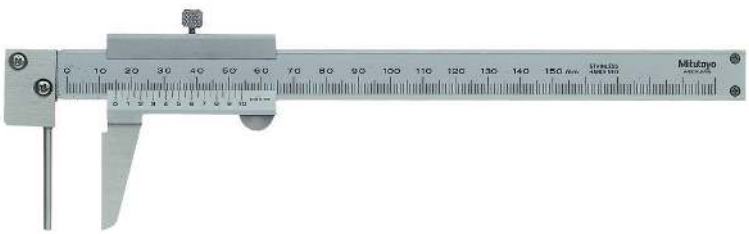

536-161

Metric

No.	Range [mm]	Max. Permissible Error E MPE	Graduation	Mass [g]
536-161	0 - 150	±0,05 mm	0,05 mm	150

Specifications

Delivered	In a case

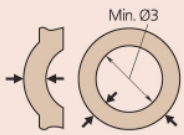

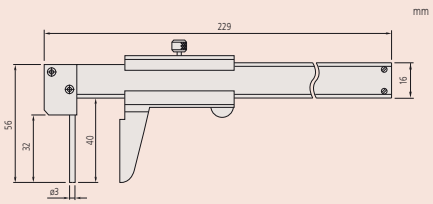

All products to be sold to commercial customers.
Product illustrations are without obligation. Product descriptions, in particular any and all technical specifications, are only binding when explicitly agreed upon.

Vernier Hook Type Calipers

Series 536

These Vernier Hook Type Calipers enable you to measure the width of grooves and lands inside bores and recesses.

Specifications

Delivered	In a case

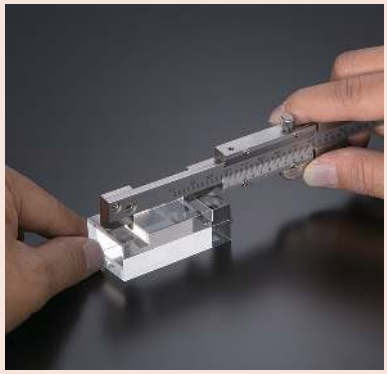

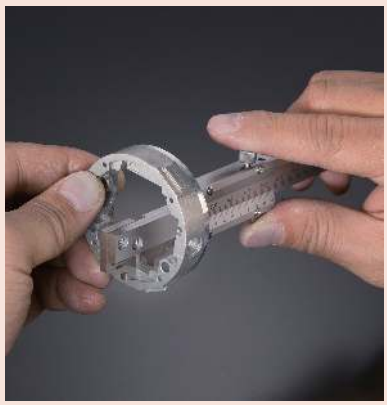

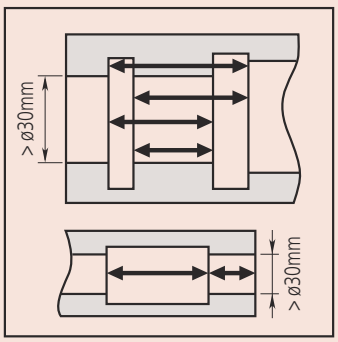

536-171

536-172

Metric

No.	Range [mm]	Max. Permissible Error E MPE	Max. Permissible Error S MPE	Graduation
536-171	0 - 200	±0,03 mm	±0,03 mm	0,02 mm
536-172	0 - 200	±0,03 mm	±0,03 mm	0,02 mm

No.	Mass [g]	L [mm]	a [mm]	b [mm]	c [mm]	d [mm]	e [mm]	f [mm]	g [mm]
536-171	170	320	28			12	4	5	3,5
536-172	200	320	28	28,5	20	12	4	1	3,5

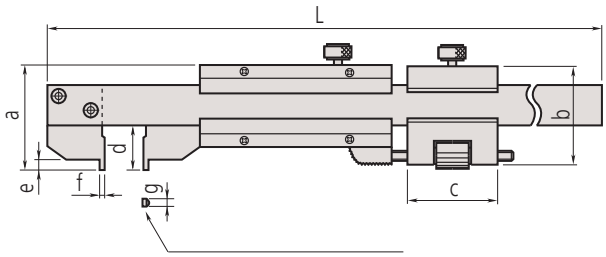

Measuring face
536-171: Radius 5 mm
536-172: flat

All products to be sold to commercial customers.
Product illustrations are without obligation. Product descriptions, in particular any and all technical specifications, are only binding when explicitly agreed upon.

Mitutoyo

Optional Accessories for Calipers

Depth base attachment

This is an optional depth base attachment for calipers.
It offers you the following benefits:

- For digital, vernier and dial calipers which have a depth measuring bar.
- Finely ground base surface.
- Secure locking clamp.

050084-10

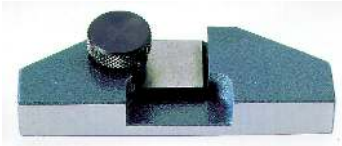

050083-10

Metric

No.	Applicable measuring range of caliper	Mass [g]	a [mm]	b [mm]	c [mm]	d [mm]	e [mm]
050083-10	100, 150 and 200 mm	130	25	75	24,5	9	16
050084-10	100, 150 and 200 mm	160	25	100	24,5	9	16
050085-10	300 mm	270	30	125	28,5	11,5	20

Sample application

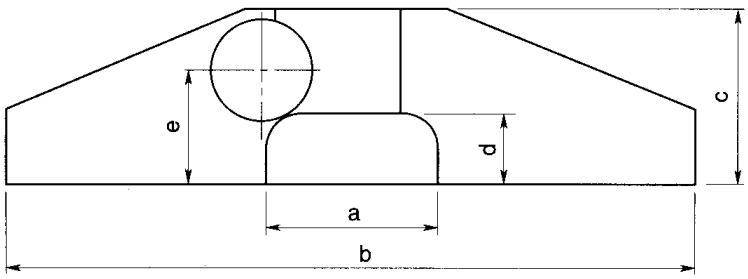

All products to be sold to commercial customers.
Product illustrations are without obligation. Product descriptions, in particular any and all technical specifications, are only binding when explicitly agreed upon.

Depth Measuring Instruments

Depth Micrometers
Page 206

Depth Calipers and Depth Gauges
Page 209

Depth Caliper Accessories
Page 218

All products to be sold to commercial customers.
Product illustrations are without obligation. Product descriptions, in particular any and all technical specifications, are only binding when explicitly agreed upon.

Depth Micrometers with Interchangeable Rods

Series 128

This Depth Micrometer offers you the following benefits:

- ø4 mm measuring rod.
- Ratchet stop provides you with constant measuring force.
- Measuring rod lock.
- Carbide-tipped measuring rod model is available.

128-101

Specifications

Measuring span	25 mm
Spindle pitch	0,5 mm with spindle lock
Measuring face	Hardened, precision ground, micro-lap finish
Base	Hardened tool steel
Scale	Thimble and sleeve satin chrome finish, ø 18 mm
Measuring force	5-10 N
Delivered	Including box and key

Metric

No.	Range [mm]	Graduation	Maximum Permissible Error J MPE	Flatness base	Flatness rod	Parallelism base/rod	Base (W x T)	Mass [g]
128-101	0 - 25	0,01 mm	± 3 µm	1,3 µm	0,3 µm	5 µm	63,5 x 16 mm	200
128-102	0 - 25	0,01 mm	± 3 µm	2 µm	0,3 µm	5 µm	101,6 x 16 mm	250

Metric

Carbide-tipped measuring rod

No.	Range [mm]	Graduation	Maximum Permissible Error J MPE	Flatness base	Flatness rod	Parallelism base/rod	Base (W x T)	Mass [g]
128-103	0 - 25	0,01 mm	± 3 µm	1,3 µm	0,3 µm	5 µm	63,5 x 16 mm	200
128-104	0 - 25	0,01 mm	± 3 µm	2 µm	0,3 µm	5 µm	101,6 x 16 mm	250

All products to be sold to commercial customers.
Product illustrations are without obligation. Product descriptions, in particular any and all technical specifications, are only binding when explicitly agreed upon.

Depth Micrometers with Interchangeable Rods

Series 129

This interchangeable rod type micrometer can be used for wide range measurements.
It offers you the following benefits:

- ø4 mm interchangeable rods, with lapped measuring surfaces, enable you to make wide-range measurement
- The ratchet stop provides constant measuring force.
- Measuring rod lock.

Specifications

Measuring span	25 mm
Spindle pitch	0,5 mm, with spindle lock
Measuring face	Hardened, precision ground, micro-lap finish
Base	Hardened tool steel
Scale	Thimble and sleeve satin chrome finish ø18 mm
Measuring force	5-10 N
Delivered	Including box and key

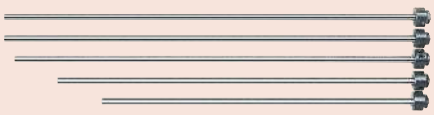

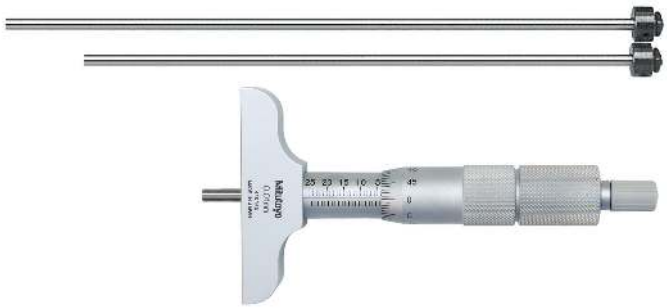

129-110

Metric — Base 101.6 x 16 mm

No.	Range [mm]	Graduation	Spindle feed error	Zero point errors of rods	Flatness base	Flatness rod	Parallelism base/rod	Number of rods	Mass [g]
129-155	0 - 25	0,01 mm	3 µm	±3 µm	2 µm	0,3 µm	5 µm	1	290
129-113	0 - 50	0,01 mm	3 µm	±3 µm	2 µm	0,3 µm	5 µm	2	310
129-114	0 - 75	0,01 mm	3 µm	±3 µm	2 µm	0,3 µm	6 µm	3	330
129-115	0 - 100	0,01 mm	3 µm	±4 µm	2 µm	0,3 µm	6 µm	4	355
129-116	0 - 150	0,01 mm	3 µm	±4 µm	2 µm	0,3 µm	7 µm	6	410
129-153	0 - 300	0,01 mm	3 µm	±6 µm	2 µm	0,3 µm	10 µm	12	640

Metric — Base 63.5 x 16 mm

No.	Range [mm]	Graduation	Spindle feed error	Zero point errors of rods	Flatness base	Flatness rod	Parallelism base/rod	Number of rods	Mass [g]
129-154	0 - 25	0,01 mm	3 µm	±3 µm	1,3 µm	0,3 µm	5 µm	1	240
129-109	0 - 50	0,01 mm	3 µm	±3 µm	1,3 µm	0,3 µm	5 µm	2	260
129-110	0 - 75	0,01 mm	3 µm	±3 µm	1,3 µm	0,3 µm	6 µm	3	280
129-111	0 - 100	0,01 mm	3 µm	+-4 µm	1,3 µm	0,3 µm	6 µm	4	310
129-112	0 - 150	0,01 mm	3 µm	+-4 µm	1,3 µm	0,3 µm	7 µm	6	370
129-152	0 - 300	0,01 mm	3 µm	±6 µm	1,3 µm	0,3 µm	10 µm	12	600

mm

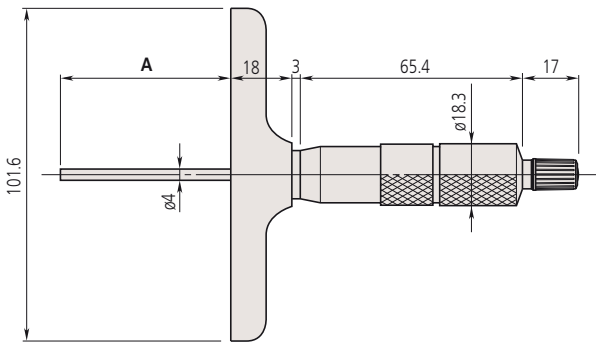

A = Range

All products to be sold to commercial customers.
Product illustrations are without obligation. Product descriptions, in particular any and all technical specifications, are only binding when explicitly agreed upon.

Mitutoyo

Digimatic Depth Micrometers with Interchangeable Rod

Series 329

This interchangeable rod type micrometer can be used for wide range measurements.
It offers you the following benefits:

- ø4 mm interchangeable rods, with lapped measuring surfaces, enable you to make wide-range measurement
- The ratchet stop provides constant measuring force.
- Measuring rod lock.

329-250-30

Metric

No.	Range [mm]	Digital step	Spindle feed error	Zero point errors of rods	Flatness base	Flatness rod	Parallelism base/rod	Base (W x T)	Number of rods	Mass [g]
329-250-30	0 - 150	0,001 mm	3 µm	±4 µm	2 µm	0,3 µm	7 µm	101,6 x 16 mm	6	540
329-251-30	0 - 300	0,001 mm	3 µm	±6 µm	2 µm	0,3 µm	10 µm	101,6 x 16 mm	12	790

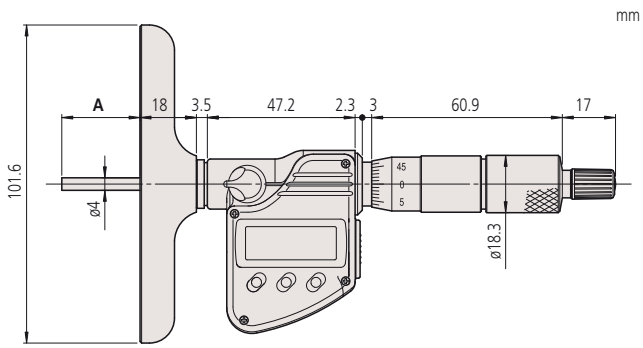

A = Range

Functions	Series 329
DATA (output with cable) / HOLD (display value)	●
Lock function	●
Auto Power OFF after 20 min. non use	●
2 x PRESET	●
Low voltage alarm	●
Data output	●
ABS / INC (INC ZERO)	●

Specifications

Measuring span	25 mm
Spindle pitch	0,5 mm with spindle lock
Measuring face	Hardened, precision ground, micro-lap finish
Base	Hardened tool steel
Scale	Thimble and sleeve satin chrome finish, ø18 mm
Measuring force	5-10 N
Power supply	1 battery SR-44
Battery life	Approx. 2,4 years
Delivered	Including box, key and 1 battery

Optional accessories

No.	Description
05CZA662	Digimatic Cable with Data Button IP Type, 1m, Micrometer Type
05CZA663	Digimatic Cable with Data Button IP Type, 2m, Micrometer Type
06AFM380B	USB Input Tool Direct (Digimatic USB), Digi/Digi2, With Data Button IP Micrometer Type
264-622	U-WAVE fit, IP67 Type, Wireless Transmitter for Micrometer
264-623	U-WAVE fit, Buzzer Type, Wireless Transmitter for Micrometer
264-627	U-WAVE fit Bluetooth, Buzzer Type, Wireless Transmitter for Micrometer
264-626	U-WAVE fit Bluetooth, IP67 Type, Wireless Transmitter for Micrometer
02AZF310	Connection Unit, U-WAVE fit, Waterproof Type

Consumable spares

No.	Description
938882	Battery SR44 1.5V

All products to be sold to commercial customers.
Product illustrations are without obligation. Product descriptions, in particular any and all technical specifications, are only binding when explicitly agreed upon.

ABSOLUTE Digimatic Indicator Depth Gauges

Series 547

ABSOLUTE®

This ABSOLUTE Digimatic Indicator Depth Gauge offers you the following benefits:
- It is equipped with the ABSOLUTE Digimatic Indicator ID-C.
- It has a hardened, precision ground and micro-lapped reference face on its base.

Functions	Series 547
Lock function	●
PRESET	●
ABS / INC (INC ZERO)	●
DATA (output with cable) / HOLD (display value)	●
Counting direction switchable	●
Digimatic data output	●
GO/±NG judgement	●
Calculation function (with formula)	●

Specifications

Stroke	12,7 mm
Scale	Capacitance type ABSOLUTE linear encoder
Alarm	Low voltage, counting value composition error, overflow error, tolerance limit setting error
Battery life	Approx. 7000 hours
Power supply	1 battery SR-44
Measuring force	≤ 1,5 N
Contact point	Carbide ball
Delivered	Including Box and extensions 10, 20, 30 (2 pcs.), 100 mm

Optional accessories

No.	Description
905338	Digimatic Cable, Flat Straight Type, 1m
905409	Digimatic Cable, Flat Straight Type, 2m
06AFM380F	USB Input Tool Direct (Digimatic USB), Digi/Digi2, Flat Straight Type
02AZD880G	U-WAVE-T, Buzzer Type, Wireless Transmitter
02AZD730G	U-WAVE-T, IP67 Type, Wireless Transmitter
02AZD790F	U-WAVE-T Connection Cable F, Flat Straight Type

Consumable spares

No.	Description
938882	Battery SR44 1.5V
21JAA224	Contact Element Ball Point, M2,5x0,45, 17mm Length, Carbide, Metric

547-211

Metric — With indicator No. 543-390BD

No.	Range [mm]	Digital step	Base (W x T)	Accuracy	Base flatness	Mass [g]
547-251	0 - 200	1 µm	63,5 x 16 mm	± 5 µm	2 µm	290
547-252	0 - 200	1 µm	101,6 x 16 mm	± 5 µm	2 µm	340

Metric — With indicator No. 543-400BD

No.	Range [mm]	Digital step	Base (W x T)	Accuracy	Base flatness	Mass [g]
547-211	0 - 200	10 µm	63,5 x 16 mm	± 20 µm	5 µm	290
547-212	0 - 200	10 µm	101,6 x 16 mm	± 20 µm	5 µm	340

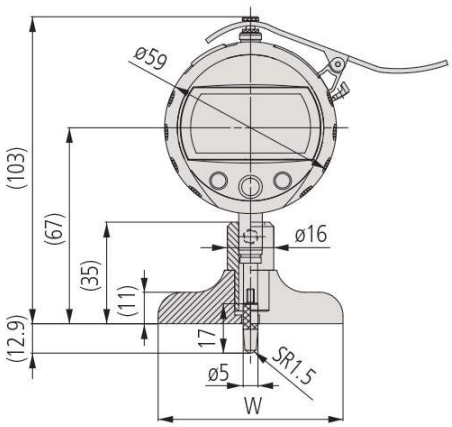

Base hole ø6

All products to be sold to commercial customers.
Product illustrations are without obligation. Product descriptions, in particular any and all technical specifications, are only binding when explicitly agreed upon.

Mitutoyo

Dial Indicator Depth Gauges

Series 7

This rectangular base dial indicator depth gauge offers you the following benefits:

- It has a hardened, precision ground and micro-lapped reference face on its base.

7231A

7210A

7211A

7220A

7221A

7214A

Metric

With back plunger indicator No. 1162A

No.	Range [mm]	Graduation	Accuracy	Base (W x T)	Stroke [mm]	Measuring force [N]	Base flatness [µm]	Probe tip	Extension rods	Mass [g]
7231A	0 - 200	0,01 mm	±15 µm	63,5 x 16 mm	5	≤ 1,4	5	Ball, R = 1.5 mm (No. 21JAA224)	10, 20, 30, 30, 100 mm	200

Metric

With indicator No. 2902AB

No.	Range [mm]	Graduation	Accuracy	Base (W x T)	Stroke [mm]	Measuring force [N]	Base flatness [µm]	Probe tip	Extension rods	Mass [g]
7210A	0 - 10	0,01 mm	±15 µm	40 x 16 mm	10	≤ 1,4	5	Needle, R = 0.2 mm (No.137413)		205
7211A	0 - 200	0,01 mm	±15 µm	63,5 x 16 mm	10	≤ 1,4	5	Ball, R = 1.5 mm (No. 21JAA224)	10, 20, 30, 30, 100 mm	260
7212A	0 - 200	0,01 mm	±15 µm	101,6 x 16 mm	10	≤ 1,4	5	Ball, R = 1.5 mm (No. 21JAA224)	10, 20, 30, 30, 100 mm	310
7220A	0 - 200	0,01 mm	±15 µm	100 x 18 mm	10	≤ 1,4	5	Ball, R = 1.5 mm (No. 21JAA224)	10, 20, 30, 30, 100 mm	380
7221A	0 - 200	0,01 mm	±15 µm	150 x 18 mm	10	≤ 1,4	5	Ball, R = 1.5 mm (No. 21JAA224)	10, 20, 30, 30, 100 mm	500

Metric

With indicator No. 2952AB

No.	Range [mm]	Graduation	Accuracy	Base (W x T)	Stroke [mm]	Measuring force [N]	Base flatness [µm]	Probe tip	Extension rods	Mass [g]
7213A	0 - 210	0,01 mm	±30 µm	63,5 x 16 mm	30	≤ 2,5	5	Ball, R = 1.5 mm (No. 21JAA225)	30, 60, 90 mm	260
7214A	0 - 210	0,01 mm	±30 µm	101,6 x 16 mm	30	≤ 2,5	5	Ball, R = 1.5 mm (No. 21JAA225)	30, 60, 90 mm	310

Optional accessories

No.	Description
21AZB195	Limit Hands (green) 2pcs, Dial Indicator Series 2/3/4
21AZB148	Bezel Clamp for Dial Gauge, Metric, Series 2/3/4

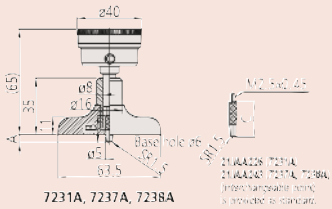

7231A, 7237A, 7238A

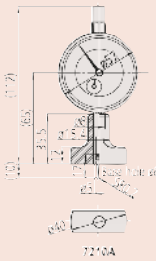

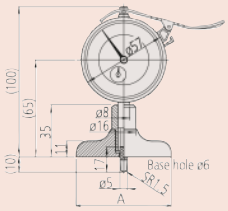

7211A A=63.5 mm
7212A A=101.6 mm

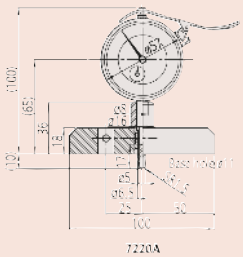

7220A

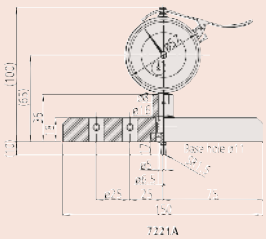

7221A

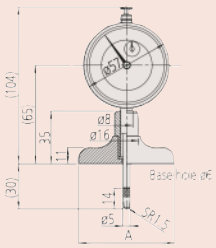

7213A, 7217A A=63.5 mm
7214A, 7218A A=101.6 mm

All products to be sold to commercial customers.
Product illustrations are without obligation. Product descriptions, in particular any and all technical specifications, are only binding when explicitly agreed upon.

Dial Indicator Depth Gauges

Series 7

This round base type dial indicator depth gauge offers you the following benefits:
- Round base type
- It has a hardened, precision ground and micro-lapped reference face on its base.

7222A

7223A

7224A

Metric

Round base with indicator No. 2902AB

No.	Range [mm]	Graduation	Accuracy	Base (W x T)	Stroke [mm]	Measuring force [N]	Base flatness [µm]	Probe tip	Mass [g]
7222A	0 - 10	0,01 mm	±15 µm	ø 16 mm	10	≤ 1,4	5	Needle, R = 0.2 mm (No.137413)	165
7223A	0 - 10	0,01 mm	±15 µm	ø 25 mm	10	≤ 1,4	5	Ball, R = 1.5 mm (No. 21JAA224)	180
7224A	0 - 10	0,01 mm	±15 µm	ø 40 mm	10	≤ 1,4	5	Ball, R = 1.5 mm (No. 21JAA224)	195

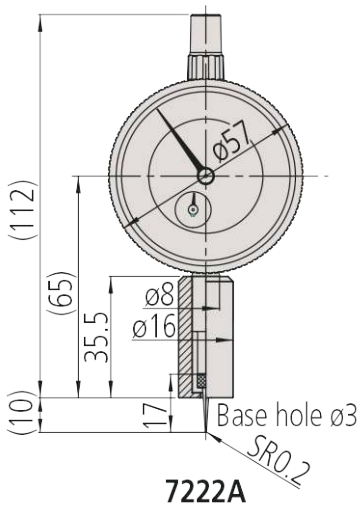

7222A

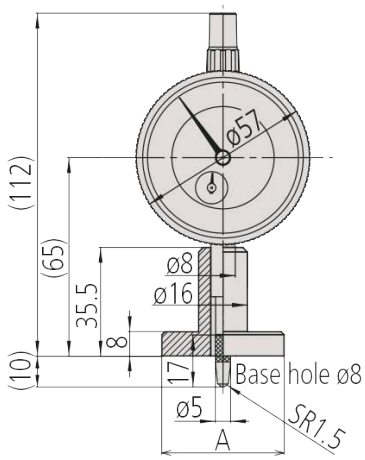

7223A A=ø25 mm
7224A A=ø40 mm

All products to be sold to commercial customers.
Product illustrations are without obligation. Product descriptions, in particular any and all technical specifications, are only binding when explicitly agreed upon.

Mitutoyo

Optional accessories

No.	Description
21AZB195	Limit Hands (green) 2pcs, Dial Indicator Series 2/3/4
21AZB148	Bezel Clamp for Dial Gauge, Metric, Series 2/3/4

ABSOLUTE Digimatic Depth Gauges

Series 571

ABSOLUTE®

This is a standard model Digital Depth Gauge.
It offers you the following benefits:

- ABSOLUTE System gives you reliable measurements.
- Its base and measuring faces are hardened and micro-lapped for robustness.
- Large character height makes measurements easy to read.

571-201-30

571-204-10

Metric

No.	Range [mm]	Digital step	Max. Permissible Error E MPE	L [mm]	Base (W x T)	Mass [g]
571-201-30	0 - 150	0,01 mm	±0,02 mm	239	100 x 6 mm	207
571-202-30	0 - 200	0,01 mm	±0,02 mm	289	100 x 6 mm	227
571-203-30	0 - 300	0,01 mm	±0,03 mm	403	100 x 6 mm	310
571-204-10	0 - 450	0,01 mm	±0,05 mm	635	250 x 10 mm	1270
571-205-10	0 - 600	0,01 mm	±0,05 mm	785	250 x 10 mm	1400
571-206-10	0 - 750	0,01 mm	±0,06 mm	935	250 x 10 mm	1530
571-207-10	0 - 1000	0,01 mm	±0,07 mm	1200	250 x 10 mm	1760

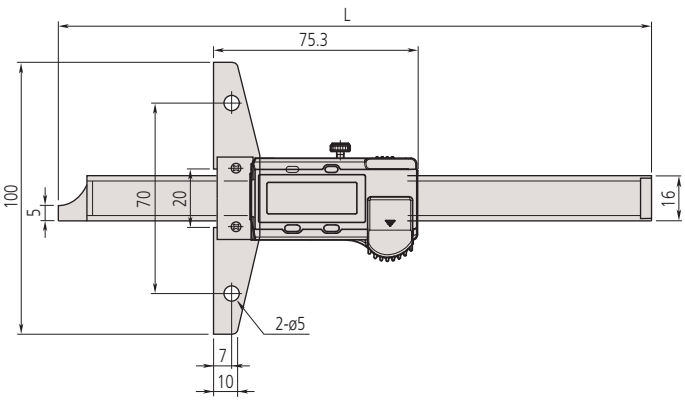

Up to 300 mm range

Functions	Series 571
ORIGIN (ABS-Zero)	■
ON/OFF	■
Low voltage alarm	■
Data output	■
ABS / INC (INC ZERO)	■

Specifications

Max. response speed	Unlimited
Power supply	1 battery SR-44
Battery life	Approx. 18000 hours (150, 200 mm) approx. 20000 hours (>200 mm)
Display	LCD, character height 9 mm (150/200/300 mm), 10 mm (>300 mm)
Delivered	In a box including 1 battery

Optional accessories

No.	Description
959149	Digimatic Cable, Straight, Data Button,, 1m
959150	Digimatic Cable, Straight, Data Button,, 2m
06AFM380C	USB Input Tool Direct (Digimatic USB), Digi/Digi2, Straight, with Data Button
264-620	U-WAVE fit, IP67 Type, Wireless Transmitter for Caliper
264-621	U-WAVE fit, Buzzer Type, Wireless Transmitter for Caliper
264-624	U-WAVE fit Bluetooth, IP67 Type, Wireless Transmitter for Caliper
264-625	U-WAVE fit Bluetooth, Buzzer Type, Wireless Transmitter for Caliper
02AZF300	Connection Unit, U-WAVE fit, Standard Type
959143	Data Hold Unit
900370	Extension Base, Depth Gauge, 180mm width for up to 300mm Range
900371	Extension Base, Depth Gauge, 260mm width for up to 300mm Range
900372	Extension Base, Depth Gauge, 320mm width for up to 300mm Range

Consumable spares

No.	Description
938882	Battery SR44 1.5V

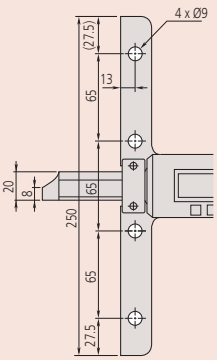

> 300 mm range

All products to be sold to commercial customers.
Product illustrations are without obligation. Product descriptions, in particular any and all technical specifications, are only binding when explicitly agreed upon.

ABSOLUTE Digimatic Depth Gauges

Functions	Series 571
ORIGIN (ABS-Zero)	●
Auto Power OFF after 20 min. non use	●
Low voltage alarm	●
Data output	●

Specifications

Max. response speed	Unlimited
Power supply	1 battery SR-44
Battery life	Approx. 5 years
Display	LCD, Character Height 9 mm (150, 200 mm) 11 mm (300 mm)
Delivered	In a box including 1 battery

Optional accessories

No.	Description
05CZA624	Digimatic Cable with Data Button IP Type, 1m, Caliper Type
05CZA625	Digimatic Cable with Data Button IP Type, 2m, Caliper Type
06AFM380A	USB Input Tool Direct (Digimatic USB), Digi/Digi2, With Data Button IP Caliper Type
264-620	U-WAVE fit, IP67 Type, Wireless Transmitter for Caliper
264-621	U-WAVE fit, Buzzer Type, Wireless Transmitter for Caliper
264-624	U-WAVE fit Bluetooth, IP67 Type, Wireless Transmitter for Caliper
264-625	U-WAVE fit Bluetooth, Buzzer Type, Wireless Transmitter for Caliper
02AZF310	Connection Unit, U-WAVE fit, Waterproof Type
900370	Extension Base, Depth Gauge, 180mm width for up to 300mm Range
900371	Extension Base, Depth Gauge, 260mm width for up to 300mm Range
900372	Extension Base, Depth Gauge, 320mm width for up to 300mm Range

Consumable spares

No.	Description
938882	Battery SR44 1.5V

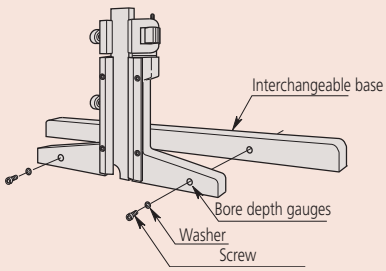

Mounting the interchangeable base

Series 571

This Digital Depth Gauge is IP67 coolant proof and offers you the following benefits:

- ABSOLUTE System gives you reliable measurements.
- Its base and measuring faces are hardened and micro-lapped for robustness.
- It has excellent resistance against water and dust (IP67 protection level) enabling you to use it in machining situations that include splashing coolant fluid.
- Extremely resistant to both coolants and lubricants.

571-252-20

Metric

No.	Range [mm]	Digital step	Max. Permissible Error E MPE	L [mm]	Base (W x T)	Mass [g]
571-251-20	0 - 150	0,01 mm	±0,02 mm	239	100 x 6 mm	199
571-252-20	0 - 200	0,01 mm	±0,02 mm	289	100 x 6 mm	219
571-253-20	0 - 300	0,01 mm	±0,03 mm	403	100 x 6,3 mm	315

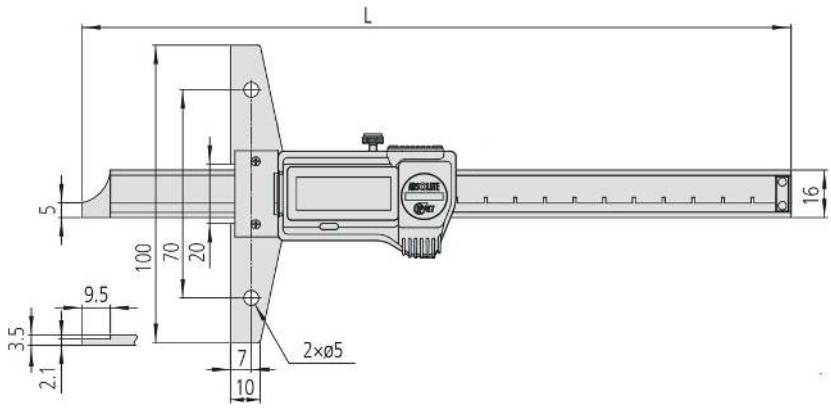

Range: 0-150 mm, 0-200 mm

All products to be sold to commercial customers.
Product illustrations are without obligation. Product descriptions, in particular any and all technical specifications, are only binding when explicitly agreed upon.

ABSOLUTE Digimatic Depth Gauges IP67 Hook/Pin Type

Series 571

This Digital Depth Gauge is IP67 and offers you the following benefits:

- It has excellent resistance against water and dust (IP67 protection level) enabling you to use it in situations that include coolant fluid.
- Direct reading by pressing the OFFSET function, which compensates for the 10 mm width of the hook (hook type).

Safety Dust- and Water-Protected
www.tuv.com ID 2011207400

571-255-20

571-302-20

Metric — Hook Type

No.	Depth range	Hook range	Digital step	Max. Permissible Error E MPE	Base (W x T)	L [mm]	Mass [g]
571-254-20	10,1-160 mm	0-150 mm	0,01 mm	±0,03 mm	100 x 6 mm	249	216
571-255-20	10,1-210 mm	0-200 mm	0,01 mm	±0,03 mm	100 x 6 mm	299	236

Metric — Pin Type

No.	Range [mm]	Digital step	Max. Permissible Error E MPE	Base (W x T)	L [mm]	Mass [g]
571-301-20	0 - 150	0,01 mm	±0,02 mm	100 x 6 mm	249	207
571-302-20	0 - 200	0,01 mm	±0,02 mm	100 x 6 mm	299	227

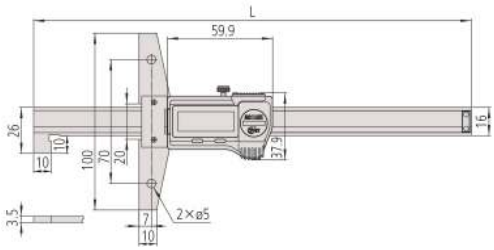

Hook Type

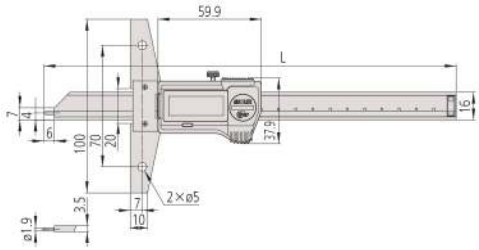

Pin Type

Functions	Series 571
ORIGIN (ABS-Zero)	■
Auto Power OFF after 20 min. non use	■
Low voltage alarm	■
Data output	■

Specifications

Max. response speed	Unlimited
Power supply	1 battery SR-44
Battery life	Approx. 5 years
Display	LCD, Character Height 9 mm
Delivered	In a case including 1 battery

Optional accessories

No.	Description
05CZA624	Digimatic Cable with Data Button IP Type, 1m, Caliper Type
05CZA625	Digimatic Cable with Data Button IP Type, 2m, Caliper Type
06AFM380A	USB Input Tool Direct (Digimatic USB), Digi/Digi2, With Data Button IP Caliper Type
264-620	U-WAVE fit, IP67 Type, Wireless Transmitter for Caliper
264-621	U-WAVE fit, Buzzer Type, Wireless Transmitter for Caliper
264-624	U-WAVE fit Bluetooth, IP67 Type, Wireless Transmitter for Caliper
264-625	U-WAVE fit Bluetooth, Buzzer Type, Wireless Transmitter for Caliper
02AZF310	Connection Unit, U-WAVE fit, Waterproof Type
900370	Extension Base, Depth Gauge, 180mm width for up to 300mm Range
900371	Extension Base, Depth Gauge, 260mm width for up to 300mm Range
900372	Extension Base, Depth Gauge, 320mm width for up to 300mm Range

Consumable spares

No.	Description
938882	Battery SR44 1.5V

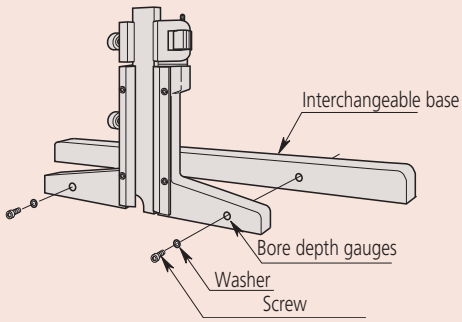

Mounting the interchangeable base

All products to be sold to commercial customers.
Product illustrations are without obligation. Product descriptions, in particular any and all technical specifications, are only binding when explicitly agreed upon.

Vernier Depth Gauges

Series 527

This vernier depth gauge offers you the following benefits:
- Its base and measuring faces are hardened and micro-lapped for robustness.
- Fine adjustment models available

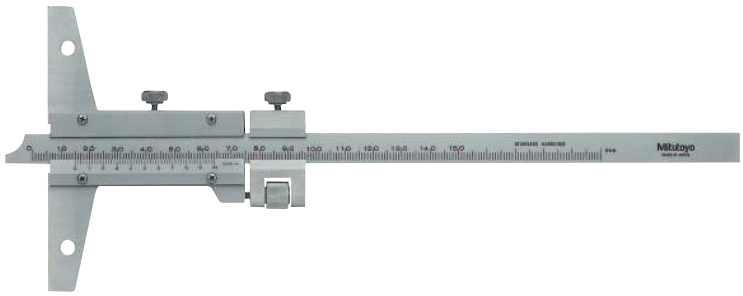

527-101

Optional accessories

No.	Description
900370	Extension Base, Depth Gauge, 180mm width for up to 300mm Range
900371	Extension Base, Depth Gauge, 260mm width for up to 300mm Range
900372	Extension Base, Depth Gauge, 320mm width for up to 300mm Range

527-201 with 900372

Metric

No.	Range [mm]	Graduation	Max. Permissible Error E MPE	Base (W x T)	L [mm]	Mass [g]
527-201	0 - 150	0,05 mm	±0,05 mm	100 x 6,5 mm	260	240
527-121	0 - 150	0,02 mm	±0,03 mm	100 x 6,5 mm	260	215
527-202	0 - 200	0,05 mm	±0,05 mm	100 x 6,5 mm	310	260
527-122	0 - 200	0,02 mm	±0,03 mm	100 x 6,5 mm	310	230
527-203	0 - 300	0,05 mm	±0,08 mm	100 x 6,5 mm	410	300
527-123	0 - 300	0,02 mm	±0,04 mm	100 x 6,5 mm	410	265
527-204	0 - 600	0,05 mm	±0,1 mm	250 x 10 mm	800	1510
527-205	0 - 1000	0,05 mm	±0,15 mm	250 x 10 mm	1200	1880

Metric

With fine adjustment

No.	Range [mm]	Graduation	Max. Permissible Error E MPE	Base (W x T)	L [mm]	Mass [g]
527-101	0 - 150	0,02 mm	±0,03 mm	100 x 6,5 mm	260	280
527-102	0 - 200	0,02 mm	±0,03 mm	100 x 6,5 mm	310	300
527-103	0 - 300	0,02 mm	±0,04 mm	100 x 6,5 mm	410	350
527-104	0 - 600	0,02 mm	±0,05 mm	250 x 10 mm	800	1510
527-105	0 - 1000	0,02 mm	±0,07 mm	250 x 10 mm	1200	1880

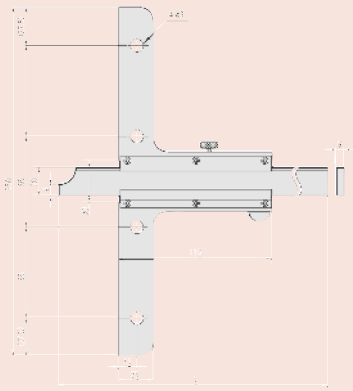

Range: 0-600 mm, 0-1000 mm

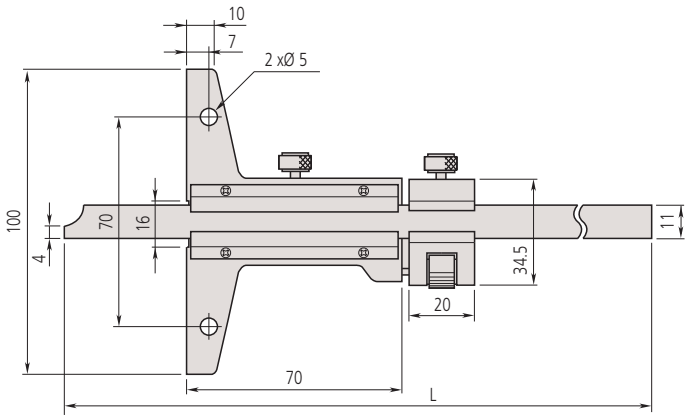

Range: 0-150 mm, 0-200 mm, 0-300 mm

All products to be sold to commercial customers.
Product illustrations are without obligation. Product descriptions, in particular any and all technical specifications, are only binding when explicitly agreed upon.

Vernier Depth Gauges Hook Type

Series 527

This hook type vernier depth gauge offers you the following benefits:

- The end of the beam is hook-shaped so you can take depth and thickness measurements of a projected portion or lip in a hole, as well as standard depth measurements.
- Fine adjustment models are available.

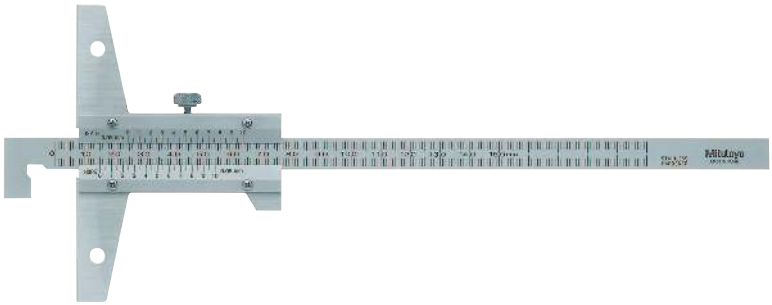

527-401

Metric

No.	Depth range	Hook range	Graduation	Max. Permissible Error E MPE	Base (W x T)	L [mm]	Mass [g]
527-401	10,1-150 mm	0-150 mm	0,05 mm	±0,05 mm	100 x 6,5 mm	260	240
527-402	10,1-200 mm	0-200 mm	0,05 mm	±0,05 mm	100 x 6,5 mm	310	240
527-403	10,1-300 mm	0-300 mm	0,05 mm	±0,08 mm	100 x 6,5 mm	410	270

Metric

With fine adjustment

No.	Depth range	Hook range	Graduation	Max. Permissible Error E MPE	Base (W x T)	L [mm]	Mass [g]
527-411	10,1-150 mm	0-150 mm	0,02 mm	±0,03 mm	100 x 6,5 mm	260	280
527-412	10,1-200 mm	0-200 mm	0,02 mm	±0,03 mm	100 x 6,5 mm	310	300
527-413	10,1-300 mm	0-300 mm	0,02 mm	±0,04 mm	100 x 6,5 mm	410	350

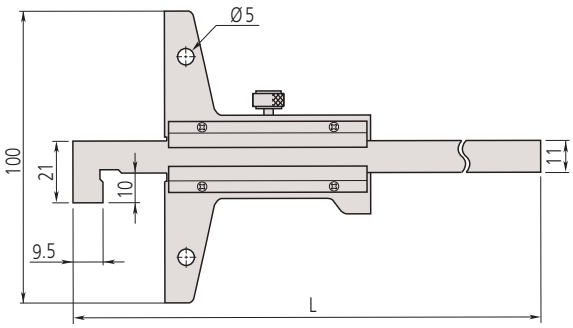

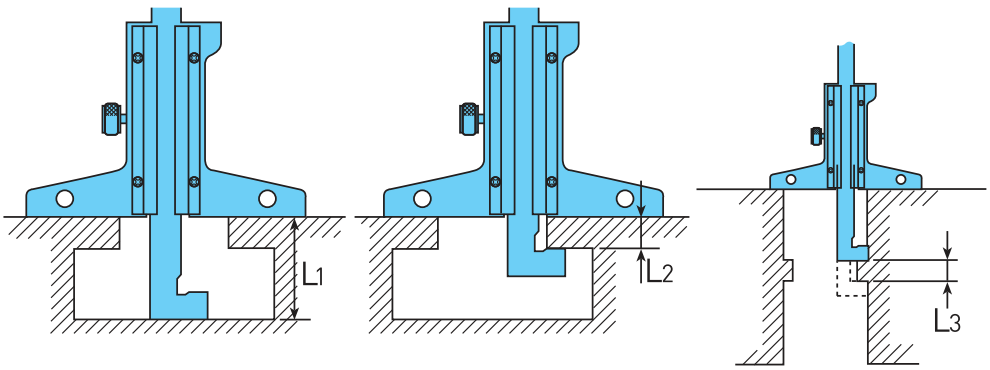

L1 = depth-vernier reading / L2 = hook-vernier reading / L3 = (depth-vernier reading) - (hook-vernier reading)

Optional accessories

No.	Description
900370	Extension Base, Depth Gauge, 180mm width for up to 300mm Range
900371	Extension Base, Depth Gauge, 260mm width for up to 300mm Range
900372	Extension Base, Depth Gauge, 320mm width for up to 300mm Range

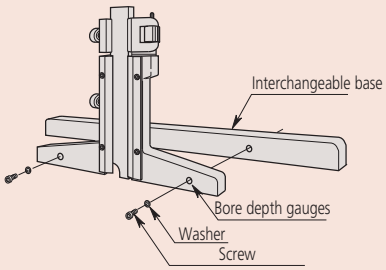

Mounting the interchangeable base

All products to be sold to commercial customers.
Product illustrations are without obligation. Product descriptions, in particular any and all technical specifications, are only binding when explicitly agreed upon.

Dial Depth Gauges

Series 527

This dial depth gauge offers you the following benefits:

- The dial is very easy-to-read.
- Its base and measuring faces are hardened and micro-lapped for robustness.
- You can make fine adjustments.

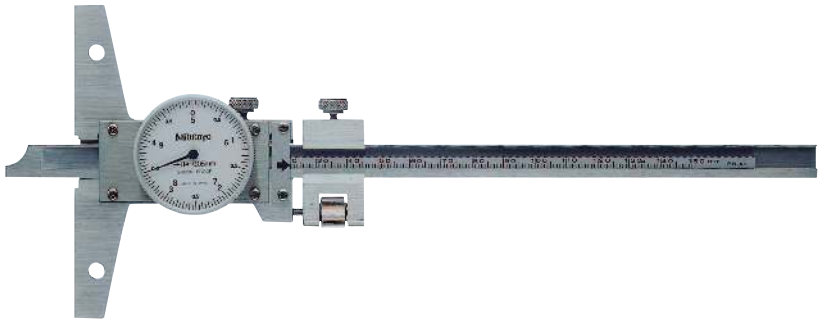

527-301-50

Optional accessories

No.	Description
900370	Extension Base, Depth Gauge, 180mm width for up to 300mm Range
900371	Extension Base, Depth Gauge, 260mm width for up to 300mm Range
900372	Extension Base, Depth Gauge, 320mm width for up to 300mm Range

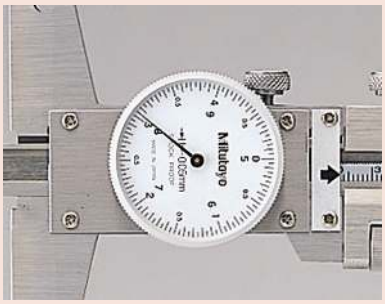

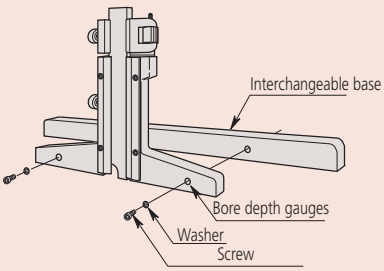

Mounting the interchangeable base

Metric

No.	Range [mm]	Graduation	Max. Permissible Error E MPE	Base (W x T)	L [mm]	Mass [g]
527-301-50	0 - 150	0,05 mm	±0,05 mm	100 x 6,5 mm	260	280
527-302-50	0 - 200	0,05 mm	±0,05 mm	100 x 6,5 mm	310	300
527-303-50	0 - 300	0,05 mm	±0,08 mm	100 x 6,5 mm	410	340

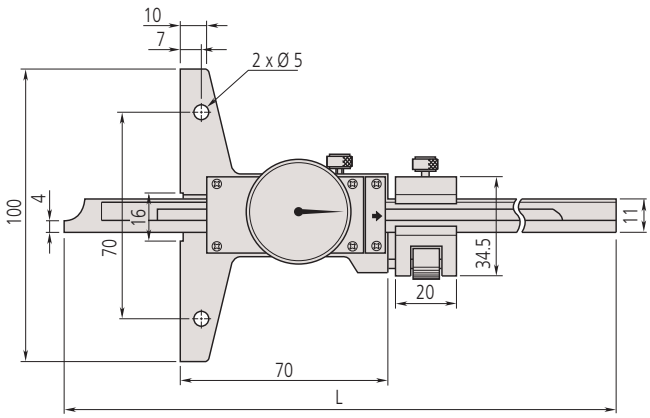

All products to be sold to commercial customers.
Product illustrations are without obligation. Product descriptions, in particular any and all technical specifications, are only binding when explicitly agreed upon.

Tyre Tread Depth Gauges

Series 571

This is designed to measure tyre tread depth and offers you the following benefits:

- The ABSOLUTE feature of this gauge keeps track of the origin point (once set) for the entire life of the battery.

571-100-20

Metric

No.	Range [mm]	Digital step	Max. Permissible Error E MPE	Base (W x T)	Mass [g]
571-100-20	0 - 25	0,01 mm	±0,02 mm	60 x 6,2 mm	160

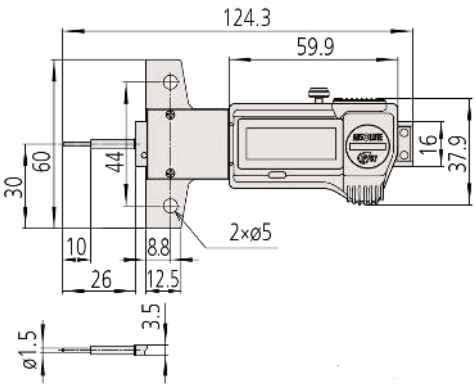

Functions	Series 571
ORIGIN (ABS-Zero)	●
Auto Power OFF after 20 min. non use	●
Low voltage alarm	●
Data output	●

Specifications

Max. response speed	unlimited
Power supply	1 battery SR-44
Battery life	Approx. 5 years
Display	LCD, Character height 9 mm
Delivered	Including 1 battery

Optional accessories

No.	Description
05CZA624	Digimatic Cable with Data Button IP Type, 1m, Caliper Type
05CZA625	Digimatic Cable with Data Button IP Type, 2m, Caliper Type
06AFM380A	USB Input Tool Direct (Digimatic USB), Digi/Digi2, With Data Button IP Caliper Type
264-620	U-WAVE fit, IP67 Type, Wireless Transmitter for Caliper
264-621	U-WAVE fit, Buzzer Type, Wireless Transmitter for Caliper
264-624	U-WAVE fit Bluetooth, IP67 Type, Wireless Transmitter for Caliper
264-625	U-WAVE fit Bluetooth, Buzzer Type, Wireless Transmitter for Caliper
02AZF310	Connection Unit, U-WAVE fit, Waterproof Type

Consumable spares

No.	Description
938882	Battery SR44 1.5V

Optional Accessories for Depth Calipers

Extension bases

These optional extension bases can be fitted to depth gauge models up to 0-300 mm range. They cannot be attached to 0-600mm or 0-1000 mm range models.

900372

Metric

No.	A [mm]	B [mm]	L [mm]	Number of holes	Mass [g]
900370	70	55	180	2	200
900371	35	60	260	5	270
900372	70	55	320	4	345

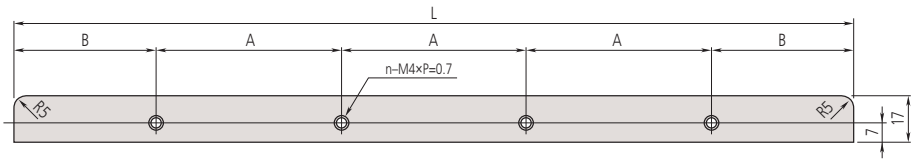

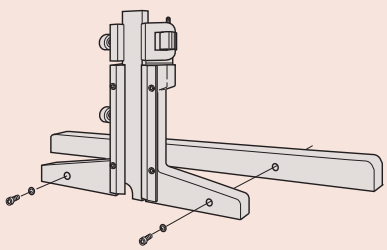

Attaching the extension base

All products to be sold to commercial customers.
Product illustrations are without obligation. Product descriptions, in particular any and all technical specifications, are only binding when explicitly agreed upon.

Height Gauges
Page 220

Height Gauge Accessories
Page 226

Height Gauges with Data Processing Unit
Page 228

All products to be sold to commercial customers.
Product illustrations are without obligation. Product descriptions, in particular any and all technical specifications, are only binding when explicitly agreed upon.

Mitutoyo

Vernier Height Gauges

Series 514

This vernier height gauge offers you the following benefits:

- You can take accurate and fast readings thanks to the satin chrome finished main and vernier scales.
- A carbide-tipped scriber is provided.

506-207

514-102

Metric

No.	Range [mm]	Graduation	Max. Permissible Error E MPE	Fine adjust-ment	a [mm]	b [mm]	c [mm]	d [mm]	e [mm]	L [mm]	Mass [kg]
506-207	0 - 200	0,02 mm	±0,03 mm	4 mm						341	1.4
514-102	0 - 300	0,02 mm	±0,04 mm	4 mm	32	20	70	28	45	525	3.1
514-104	0 - 450	0,02 mm	±0,05 mm	4 mm	32	20	70	28	45	675	3.4
514-106	0 - 600	0,02 mm	±0,05 mm	7 mm	32	24	85	35	54	870	7.4
514-108	0 - 1000	0,02 mm	±0,07 mm	6 mm	42	30	110	45	65	1340	20.0

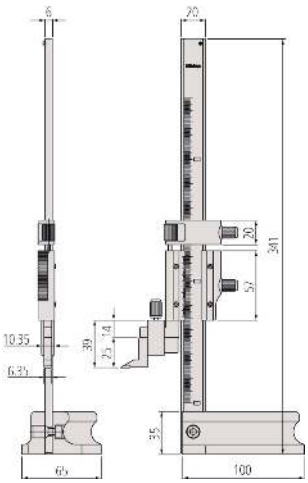

0 - 200 mm

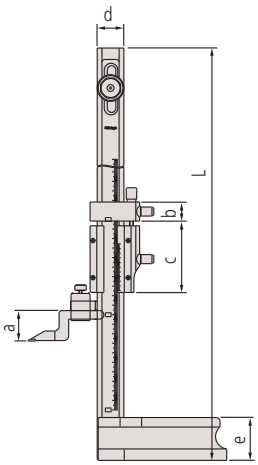

0 - 300 to 0 - 1000 mm

Specifications

Scale adjustment	15 mm: 300, 450, 600 mm range, 25 mm: 1000 mm range
Delivered	Including scriber, scriber clamp

Standard accessories

No.	Description
07GZA004	Scriber Clamp with Plastic Screw, for 12,7x6,35mm Scriber
05GZA033	Scriber Clamp, for 9x9mm Scriber
900173	Carbide Tipped Scriber, 6,35x12,7mm, 47mm Length
07GZA000	Carbide Tipped Scriber, 9x9mm, 80mm Length
905200	Carbide Tipped Scriber, 9x9mm, 150mm Length

07GZA004: for 506-207
05GZA033: for 514-102, 514-104, 514-106, 514-108
900173: for 506-207
07GZA000: for 514-102, 514-104, 514-106
905200: for 514-108

Optional accessories

No.	Description
953638	Holding Bar for Swivel Clamp, 9x9mm, 50mm Length
900209	Holding Bar for Swivel Clamp, 9x9mm, 100mm Length
900321	Swivel Clamp, for D=4/8mm, Dovetail
07GZA003	Magnifier for Vernier Height Gauge, 300, 450, 600mm
07GZA015	Magnifier for Vernier Height Gauge, 1000mm

953638: except 506-207
900209: except 506-207
900321: except 506-207

953638

900321

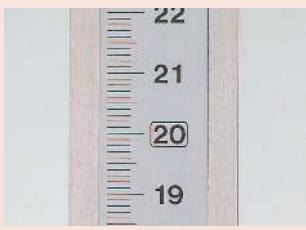

Large graduation

All products to be sold to commercial customers.
Product illustrations are without obligation. Product descriptions, in particular any and all technical specifications, are only binding when explicitly agreed upon.

Dial Height Gauges

Series 192

This Dial Height Gauge offers you the following benefits:

- It allows you easy and error-free reading with both up and down digital counters as well as a dial.
- It comes with a hand wheel so you can easily make rough adjustments.
- A carbide-tipped scriber is provided.

192-130

192-132

192-133

Specifications

Delivered	Including scriber, scriber clamp and cover

Standard accessories

No.	Description
07GZA000	Carbide Tipped Scriber, 9x9mm, 80mm Length
05GZA033	Scriber Clamp, for 9x9mm Scriber

Optional accessories

No.	Description
953638	Holding Bar for Swivel Clamp, 9x9mm, 50mm Length
900321	Swivel Clamp, for D=4/8mm, Dovetail

953638

900321

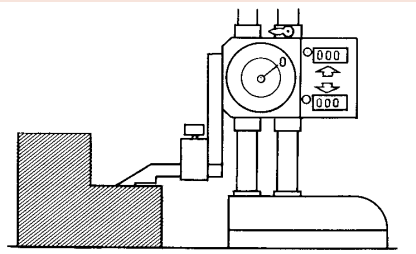

Reset

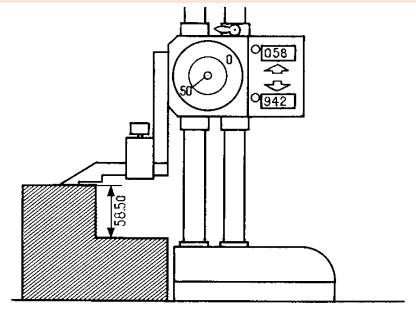

Reading off
Counter : 58,00 mm
Dial Gauge : 0,50 mm

Result : 58,50 mm

Metric

No.	Range [mm]	Digital step	Graduation	Max. Permissible Error E MPE	Mass [kg]
192-130	0 - 300	0,01 mm	0,01 mm	±0,03 mm	4.2
192-131	0 - 450	0,01 mm	0,01 mm	±0,05 mm	9.2
192-132	0 - 600	0,01 mm	0,01 mm	±0,05 mm	9.8
192-133	0 - 1000	0,01 mm	0,01 mm	±0,07 mm	17.0

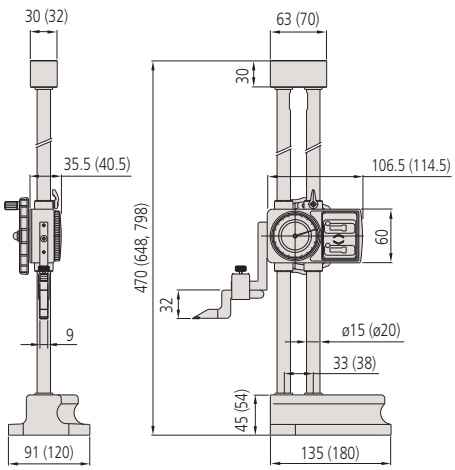

0 - 300 mm (0 - 450 mm, 0 - 600 mm)

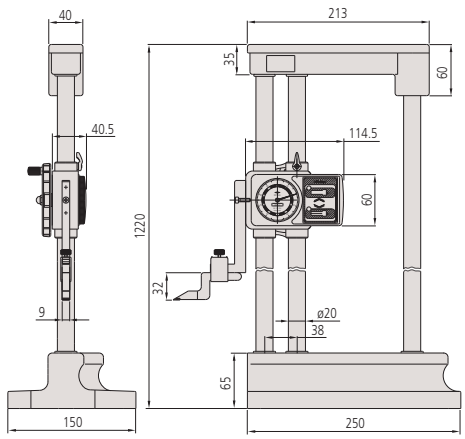

0 - 1000 mm

All products to be sold to commercial customers.
Product illustrations are without obligation. Product descriptions, in particular any and all technical specifications, are only binding when explicitly agreed upon.

Mitutoyo

ABSOLUTE Digimatic Height Gauges

Series 570

ABSOLUTE®

This Digimatic height gauge is very precise and reliable, and offers you the following benefits:

- Its built-in ABSOLUTE linear encoder means you don't have to set the reference point at every power-on, improving reliability as over-speed errors cannot occur.
- Fine-adjustment gives you precise positioning.
- A carbide-tipped scriber is provided.

570-227

Metric

No.	Range [mm]	Digital step	Max. Permissible Error E MPE	Fine adjustment	Remarks	Mass [kg]
570-227	0 - 200	0,01 mm	±0,03 mm	4 mm	2 x PRESET	1.3
570-230	0 - 1000	0,01 mm	±0,07 mm	6 mm		16.8

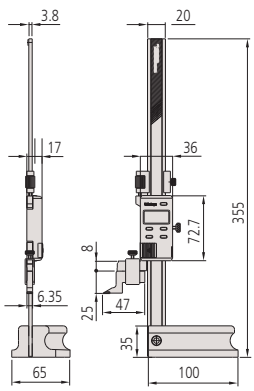

0-200 mm

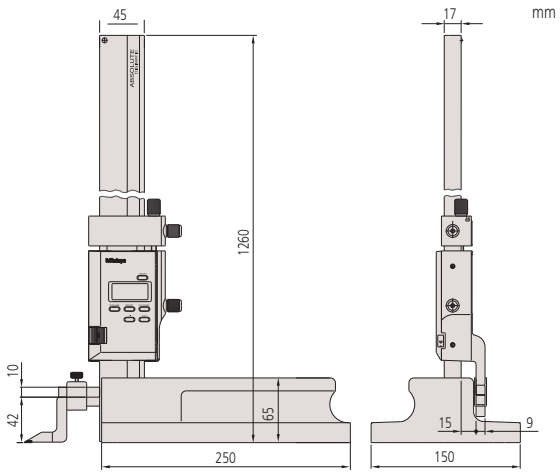

0-1000 mm

Functions	Series 570
ON/OFF	●
ABS / INC (INC ZERO)	●
PRESET	●
ORIGIN (ABS-Zero)	●
DATA (output with cable) / HOLD (display value)	●
Low voltage alarm	●
±SWITCHING	●

Specifications

Scale	ABSOLUTE electrostatic linear encoder
Display	LCD
Max. response speed	Unlimited
Delivered	Including 1 battery, scriber and scriber clamp
Battery life	Approx. 5000 hours

Standard accessories

No.	Description
901338	Scriber Clamp, for 6,35x12,7mm Scriber
05GZA033	Scriber Clamp, for 9x9mm Scriber
900173	Carbide Tipped Scriber, 6,35x12,7mm, 47mm Length
905200	Carbide Tipped Scriber, 9x9mm, 150mm Length

901338, 900173: 570-227
05GZA033, 905200: 570-230

Optional accessories

No.	Description
905338	Digimatic Cable, Flat Straight Type, 1m
905409	Digimatic Cable, Flat Straight Type, 2m
06AFM380F	USB Input Tool Direct (Digimatic USB), Digi/Digi2, Flat Straight Type
02AZD880G	U-WAVE-T, Buzzer Type, Wireless Transmitter
02AZD730G	U-WAVE-T, IP67 Type, Wireless Transmitter
02AZD790F	U-WAVE-T Connection Cable F, Flat Straight Type
953639	Holding Bar for Swivel Clamp, 6,25x12,7mm, 2" Length
953638	Holding Bar for Swivel Clamp, 9x9mm, 50mm Length
900209	Holding Bar for Swivel Clamp, 9x9mm, 100mm Length
900321	Swivel Clamp, for D=4/8mm, Dovetail

953639: 570-227
953638, 900209: 570-230

Consumable spares

No.	Description
938882	Battery SR44 1.5V

All products to be sold to commercial customers.
Product illustrations are without obligation. Product descriptions, in particular any and all technical specifications, are only binding when explicitly agreed upon.

ABSOLUTE Digimatic Height Gauges with Slider Adjustment Wheel

Functions	Series 570
ON/OFF	●
ABS / INC (INC ZERO)	●
ORIGIN (ABS-Zero)	●
DATA (output with cable) / HOLD (display value)	●
Low voltage alarm	●

Specifications

Scale	ABSOLUTE electrostatic linear encoder
Display	LCD, character height 10 mm
Max. response speed	Unlimited
Delivered	Including 1 battery, scriber and scriber clamp
Battery life	Approx. 20000 hours

Standard accessories

No.	Description
07GZA000	Carbide Tipped Scriber, 9x9mm, 80mm Length
05GZA033	Scriber Clamp, for 9x9mm Scriber

Optional accessories

No.	Description
905338	Digimatic Cable, Flat Straight Type, 1m
905409	Digimatic Cable, Flat Straight Type, 2m
06AFM380F	USB Input Tool Direct (Digimatic USB), Digi/Digi2, Flat Straight Type
02AZD880G	U-WAVE-T, Buzzer Type, Wireless Transmitter
02AZD730G	U-WAVE-T, IP67 Type, Wireless Transmitter
02AZD790F	U-WAVE-T Connection Cable F, Flat Straight Type
953638	Holding Bar for Swivel Clamp, 9x9mm, 50mm Length
900321	Swivel Clamp, for D=4/8mm, Dovetail

Consumable spares

No.	Description
938882	Battery SR44 1.5V

900321

Series 570

ABSOLUTE®

This Digimatic height gauge is very precise and reliable, and offers you the following benefits:

- Its built-in ABSOLUTE linear encoder means you don't have to set the reference point at every power-on, improving reliability as over-speed errors cannot occur.
- It comes with large and smooth-acting slider hand wheel
- A carbide-tipped scriber is provided.
- SPC data output.

570-302

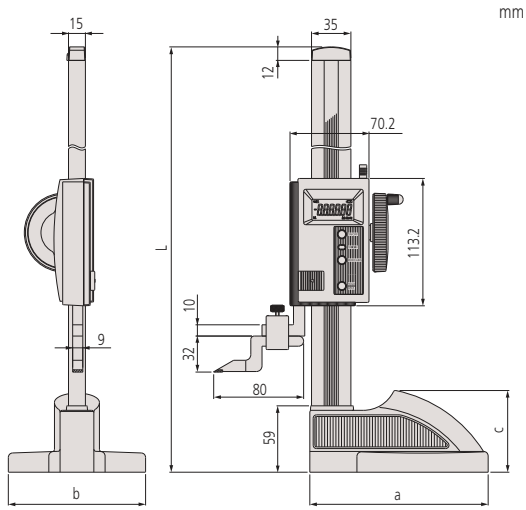

Metric

No.	Range [mm]	Digital step	Max. Permissible Error E MPE	a [mm]	b [mm]	c [mm]	L [mm]	Mass [kg]
570-302	0 - 300	0,01 mm	±0,03 mm	160	122	72,6	507	4.6
570-304	0 - 600	0,01 mm	±0,05 mm	181	142	74,1	812	6.4

Large smooth slider handwheel

Fits the hand comfortably

Large clamp lever

All products to be sold to commercial customers.
Product illustrations are without obligation. Product descriptions, in particular any and all technical specifications, are only binding when explicitly agreed upon.

Mitutoyo

Digimatic Height Gauges Double Column Type

Series 192

This High Accuracy Height Gauge offers you the following benefits:
- Its double-column structure ensures high measuring accuracy.
- Carbide-tipped scriber provided
- Large character height of 11 mm provides good readability.

192-613-10

Metric

No.	Range [mm]	Digital step	Max. Permissible Error E MPE	Mass [kg]
192-613-10	0 - 300	0,01/0,005 mm	±0,02 mm	4.7
192-614-10	0 - 600	0,01/0,005 mm	±0,05 mm	8.3
192-615-10	0 - 1000	0,01/0,005 mm	±0,07 mm	15.7

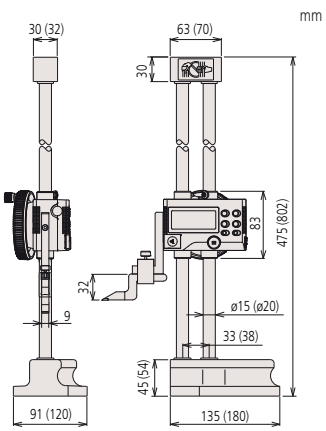

0-300 mm
(0-600 mm)

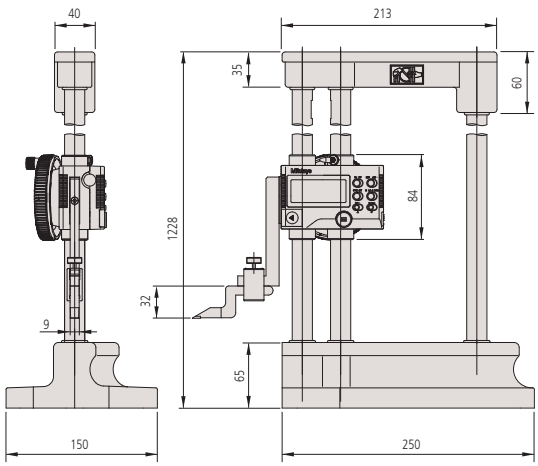

0-1000 mm

Functions	Series 192
ON/OFF	●
ABS / INC (INC ZERO)	●
PRESET (2 values)	●
DATA (output with cable) / HOLD (display value)	●
Low voltage alarm	●
±SWITCHING	●

Specifications

Display	LCD, character height: 11 mm
Max. response speed	500 mm/s
Delivered	Including scriber, scriber clamp, 1 battery and cover
Battery life	Approx. 3500 hours

Standard accessories

No.	Description
05GZA033	Scriber Clamp, for 9x9mm Scriber
07GZA000	Carbide Tipped Scriber, 9x9mm, 80mm Length
450291	Vinyl Cover Series 192, 300mm
450292	Vinyl Cover Series 192, 600mm
450290	Vinyl Cover Series 192, 1000mm

Optional accessories

No.	Description
905338	Digimatic Cable, Flat Straight Type, 1m
905409	Digimatic Cable, Flat Straight Type, 2m
06AFM380F	USB Input Tool Direct (Digimatic USB), Digi/Digi2, Flat Straight Type
02AZD880G	U-WAVE-T, Buzzer Type, Wireless Transmitter
02AZD730G	U-WAVE-T, IP67 Type, Wireless Transmitter
02AZD790F	U-WAVE-T Connection Cable F, Flat Straight Type
953638	Holding Bar for Swivel Clamp, 9x9mm, 50mm Length
900321	Swivel Clamp, for D=4/8mm, Dovetail

Consumable spares

No.	Description
938882	Battery SR44 1.5V

953638

900321

All products to be sold to commercial customers.
Product illustrations are without obligation. Product descriptions, in particular any and all technical specifications, are only binding when explicitly agreed upon.

Digimatic Height Gauges Double Column Type with Touch Trigger Probe Connector

Functions	Series 192
ON/OFF	●
ABS / INC (INC ZERO)	●
PRESET (2 values)	●
Touch-trigger probe	●
Stylus tip diameter compensation	●
DATA (output with cable) / HOLD (display value)	●
Low voltage alarm	●
±SWITCHING	●

Specifications

Display	LCD, character height: 11 mm
Max. response speed	500 mm/s
Delivered	Including scriber, scriber clamp, 1 battery and cover
Battery life	Approx. 3500 hours

Standard accessories

No.	Description
05GZA033	Scriber Clamp, for 9x9mm Scriber
905200	Carbide Tipped Scriber, 9x9mm, 150mm Length
450291	Vinyl Cover Series 192, 300mm
450292	Vinyl Cover Series 192, 600mm
450290	Vinyl Cover Series 192, 1000mm

Optional accessories

No.	Description
192-007	Bi-Directional Touch Trigger Probe, for Series 192, Metric
905338	Digimatic Cable, Flat Straight Type, 1m
905409	Digimatic Cable, Flat Straight Type, 2m
06AFM380F	USB Input Tool Direct (Digimatic USB), Digi/Digi2, Flat Straight Type
02AZD880G	U-WAVE-T, Buzzer Type, Wireless Transmitter
02AZD730G	U-WAVE-T, IP67 Type, Wireless Transmitter
02AZD790F	U-WAVE-T Connection Cable F, Flat Straight Type
953638	Holding Bar for Swivel Clamp, 9x9mm, 50mm Length
900209	Holding Bar for Swivel Clamp, 9x9mm, 100mm Length
900321	Swivel Clamp, for D=4/8mm, Dovetail

Consumable spares

No.	Description
938882	Battery SR44 1.5V

192-007

Series 192

This High Accuracy Height Gauge offers you the following benefits:

- Its double-column structure ensures high measuring accuracy.
- Carbide-tipped scriber provided
- Large character height of 11 mm provides good readability.

192-663-10

Metric

No.	Range [mm]	Digital step	Max. Permissible Error E MPE	Mass [kg]
192-663-10	0 - 300	0,01/0,005 mm	±0,02 mm	5.7
192-664-10	0 - 600	0,01/0,005 mm	±0,04 mm	8.3
192-665-10	0 - 1000	0,01/0,005 mm	±0,06 mm	15.7

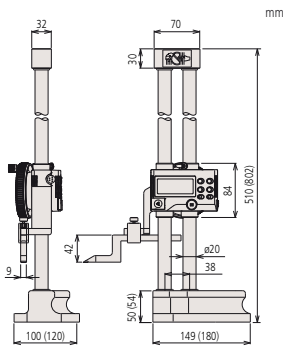

0-300 mm
(0-600 mm)

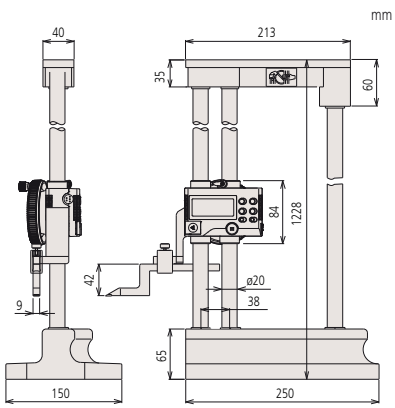

0-1000 mm

All products to be sold to commercial customers.
Product illustrations are without obligation. Product descriptions, in particular any and all technical specifications, are only binding when explicitly agreed upon.

Mitutoyo

Spare Parts for Height Gauges

Standard accessories for Height Gauges

These are optional accessories and spare parts for height gauges, that you can use for different tasks.

- Various accessories are available for using height gauges in different applications.
- Hard-wearing carbide-tipped scribers are available for all height gauges.

07GZA000

905200

900173

05GZA033

07GZA004

mm

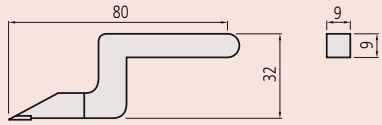

07GZA000

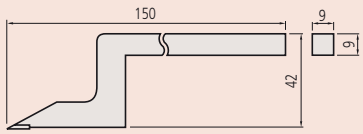

905200

mm

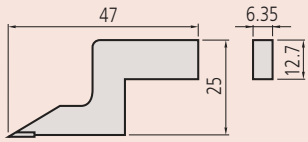

900173

Carbide-tipped scribers

No.	Applicable height gauges	Remarks
07GZA000	192-130, 192-131, 192-132, 192-133 192-613-10, 192-614-10, 192-615-10 514-102, 514-104, 514-106, 514-103, 514-105, 514-107 570-302, 570-304	Carbide tipped scriber (9 x 9 mm) 80 mm length
905200	192-663-10, 192-664-10, 192-665-10 514-108, 514-109 570-230	Carbide tipped scriber (9 x 9 mm) 150 mm length
900173	570-227, 570-244 506-207, 506-208	Carbide tipped scriber (12,7 x 6,35 mm) 47 mm length

Scriber clamps

No.	Applicable height gauges	Remarks
05GZA033	192-130, 192-131, 192-132, 192-133 192-613-10, 192-614-10, 192-615-10 192-663-10, 192-664-10, 192-665-10 514-102, 514-104, 514-106, 514-108 570-230 570-302, 570-304	Scriber clamp (9 x 9 mm)
07GZA004	570-227, 570-244, 506-207	Scriber clamp with plastic screw (12,7 x 6,35 mm)

All products to be sold to commercial customers.
Product illustrations are without obligation. Product descriptions, in particular any and all technical specifications, are only binding when explicitly agreed upon.

Optional Accessories for Height Gauges

Center master

Depth Gage Attachment

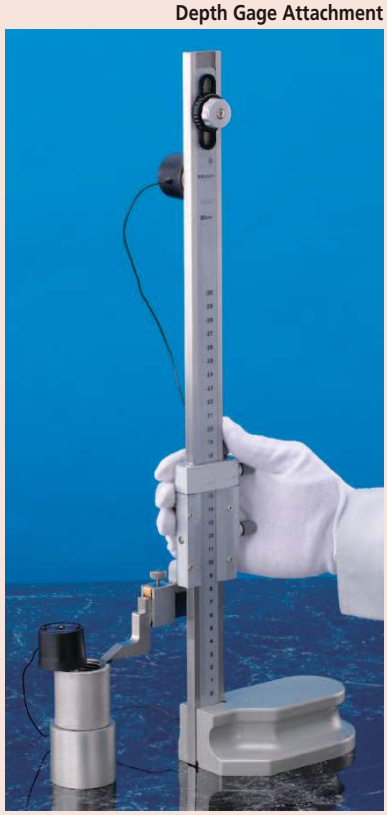

Electrical contact sensor
900872

Optional accessories for Height Gauges

These are optional accessories for height gauges, that you can use for different tasks.

- Various accessories are available for using height gauges in different applications.

Center master

No.	Applicable height gauges	Remarks	Measurable hole diameter
951144	192-130, 192-131, 192-132, 192-133 192-613-10, 192-614-10, 192-615-10 514-102, 514-103, 514-104, 514-105, 514-106, 514-107 570-302, 570-304 192-663-10, 192-664-10, 192-665-10 514-108, 514-109	Center master (9 x 9 mm)	1-38 mm

Depth measurement attachment

No.	Applicable height gauges	Remarks
900764	192-130, 192-131, 192-132, 192-133 192-613-10, 192-614-10, 192-615-10 514-102, 514-103, 514-104, 514-105, 514-106, 514-107 570-302, 570-304 192-663-10, 192-264-10, 192-665-10 514-108, 514-109	Depth measurement attachment (9 mm x 9 mm)
900878	570-227, 570-244 506-207, 506-208 192-150, 192-151, 192-152 192-630-10, 192-631-10, 192-632-10, 192-633-10 570-312, 570-313, 570-314 192-670-10, 192-671-10, 192-672-10, 192-673-10 570-248	Depth measurement attachment (12,7 mm x 6,35 mm)

Electrical contact sensor

No.	Applicable height gauges	Remarks
900872	For all height gauges on a granite surface plate.For electroconductive parts with a sufficient contact surface.	This sensor eliminates errors caused by non-contact of the slider with a workpiece while making measurements.

All products to be sold to commercial customers.
Product illustrations are without obligation. Product descriptions, in particular any and all technical specifications, are only binding when explicitly agreed upon.

Mitutoyo

QM-Height

Series 518

ABSOLUTE®

This is a high precision ABSOLUTE Digital Height Gauge that offers you the following benefits:

- It has a high accuracy, high resolution ABSOLUTE linear encoder for position detection.
- Types with and without pneumatic drive mechanism
- Automatic running of prelearnt part programs
- You can easily implement frequently used measurements, such as inside/outside diameter and pitch calculations, by icon-based commands that also support easy one-key operation.
- Extraordinary battery life
- GO/±NG judgement is performed by setting the upper and lower tolerances.

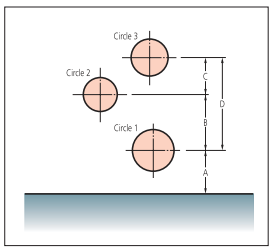

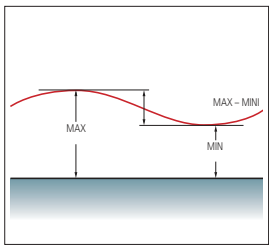

Metric

No.	Range	Digital step	Accuracy	Perpendicu-larity	Repeatability	Air float-ing	Mass [kg]
518-240	0-350 mm	0,001 mm/0,005 mm	±(2,4+2,1L/600) µm L = Measuring length (mm)	7 µm	(2σ) ≤ 1,8 µm	no	25.0
518-242	0-600 mm	0,001 mm/0,005 mm	±(2,4+2,1L/600) µm L = Measuring length (mm)	12 µm	(2σ) ≤ 1,8 µm	no	26.0
518-244	0-350 mm	0,001 mm/0,005 mm	±(2,4+2,1L/600) µm L = Measuring length (mm)	7 µm	(2σ) ≤ 1,8 µm	yes	29.0
518-246	0-600 mm	0,001 mm/0,005 mm	±(2,4+2,1L/600) µm L = Measuring length (mm)	12 µm	(2σ) ≤ 1,8 µm	yes	30.0

Specifications

Measuring force	1,5 ± 0,5 N
Scale	ABSOLUTE electromagnetic inductive
Display	TN monochrome LCD
Measuring function	1D measurement: height diameter, pitch, Max/Min/TIR (Max-Min), tolerance, preset, data memory
Drive method	Manual
Guiding method	Roller bearing
Power supply	Alkaline battery size AA LR6 (4 pcs.), rechargeable battery size AA Ni-MH (4 pcs.), AC-Adapter (optional)
Battery life	Approx. 1200 h (without air floating) approx. 90 h (with air floating)

Standard accessories

No.	Description
011037	Battery, LR6, 1,5V, 4 pcs.
12AAA715	Setting Block Linear Height/QM-Height, Probe Calibration
05HZA148	Ball Offset Probe QM-Height, D=5mm, Standard Accessory

Optional accessories

No.	Description
936937	Digimatic Cable, Flat 10-Pin Type, 1m
965014	Digimatic Cable, Flat 10-Pin Type, 2m
06AFM380D	USB Input Tool Direct (Digimatic USB), Flat 10-Pin Type
02AZD880G	U-WAVE-T, Buzzer Type, Wireless Transmitter
02AZD730G	U-WAVE-T, IP67 Type, Wireless Transmitter
02AZD790D	U-WAVE-T Connection Cable D, Flat 10-Pin Type
02AZE990	U-WAVE Transmitter Mounting Plate, for QM-Height
06AFZ950D	AC-Adapter, 6V 2A, CEE Type, Germany (Europe)
12AAF667	Ball Probe Coaxial Type, D=2mm, Ruby, 72mm Length
957261	Ball Probe Coaxial Type, D=2mm, 72mm Length
957262	Ball Probe Coaxial Type, D=3mm, 72mm Length
957263	Ball Probe Coaxial Type, D=4mm, 76mm Length
12AAB552	Ball Probe, Coaxial Type, D=10mm
957264	Disk Probe Coaxial Type, D=14mm, 59mm Length
957265	Disk Probe Coaxial Type, D=20mm, 48mm Length
12AAA788	Ball Probe Eccentric Type , D=4mm
12AAA789	Ball Probe Eccentric Type , D=6mm
12AAC072	Depth Probe for Height Gauge, 90mm Reach
12AAA792	Indicator Holder LH-600, For 8mm Stem
12AAA793	Probe Extension Holder, Height Gauge , 85mm

Scan QR Code with your mobile device and watch our product videos on YouTube

All products to be sold to commercial customers.
Product illustrations are without obligation. Product descriptions, in particular any and all technical specifications, are only binding when explicitly agreed upon.

Optional Accessories for QM-Height

Optional accessories

No.	Description
12AAF667	Ball Probe Coaxial Type, D=2mm, Ruby, 72mm Length
957261	Ball Probe Coaxial Type, D=2mm, 72mm Length
957262	Ball Probe Coaxial Type, D=3mm, 72mm Length
957263	Ball Probe Coaxial Type, D=4mm, 76mm Length
12AAB552	Ball Probe, Coaxial Type, D=10mm
957264	Disk Probe Coaxial Type, D=14mm, 59mm Length
957265	Disk Probe Coaxial Type, D=20mm, 48mm Length
12AAA788	Ball Probe Eccentric Type , D=4mm
12AAA789	Ball Probe Eccentric Type , D=6mm
12AAC072	Depth Probe for Height Gauge, 90mm Reach
12AAA792	Indicator Holder LH-600, For 8mm Stem
12AAA793	Probe Extension Holder, Height Gauge , 85mm

02AZE990

Inside diameter

Outside diameter

Series 518 - Optional Accessories for QM-Height

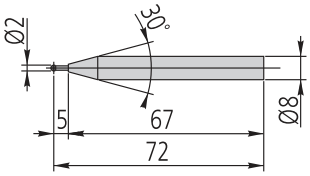

12AAF667

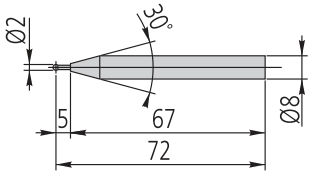

957261

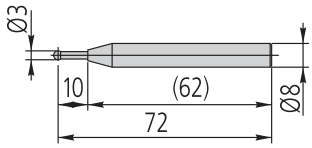

957262

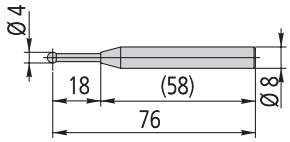

957263

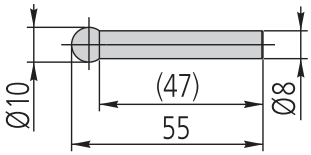

12AAB552

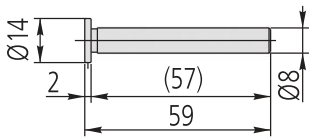

957264

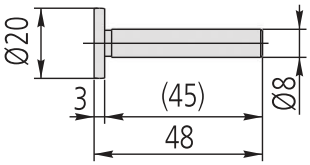

957265

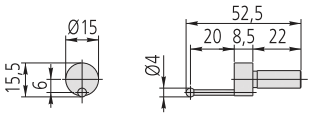

12AAA788

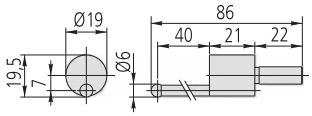

12AAA789

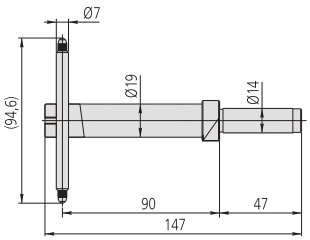

12AAC072

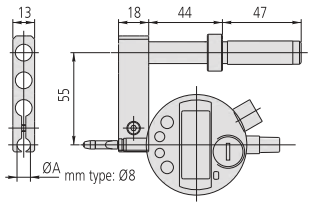

12AAA792
(with optional indicator)

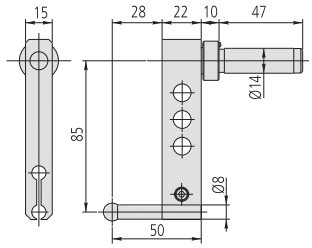

12AAA793
(with optional measuring insert)

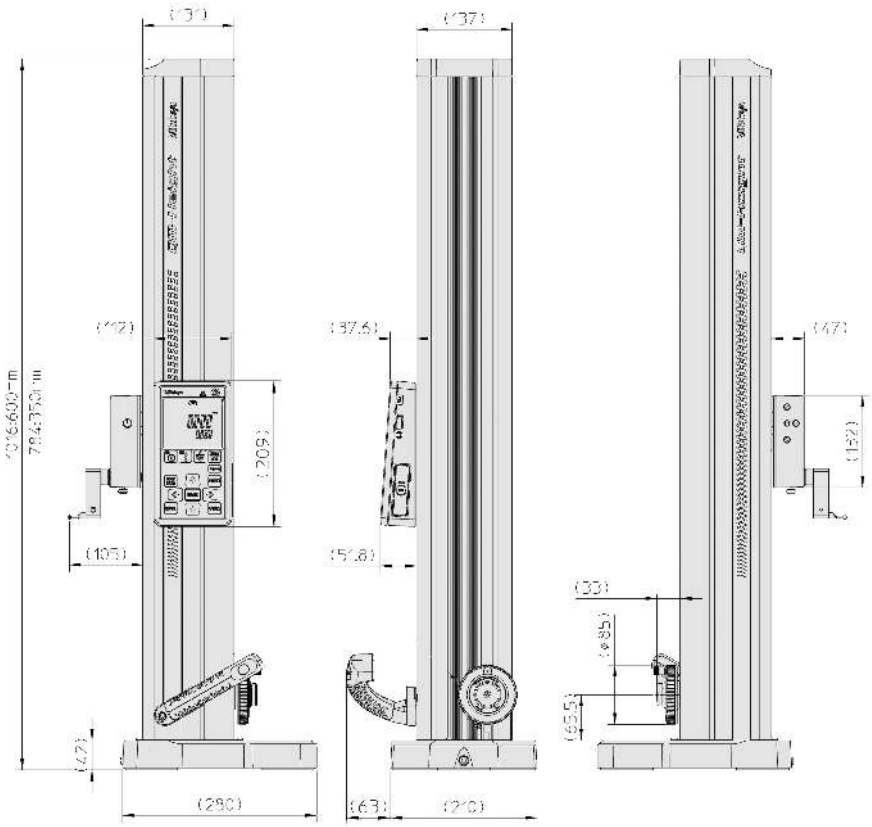

All products to be sold to commercial customers.
Product illustrations are without obligation. Product descriptions, in particular any and all technical specifications, are only binding when explicitly agreed upon.

Mitutoyo

Linear Heights LH-600E/EG

Series 518

This is a high performance 2D measurement system.
The Linear Height Gauge LH-600E/EG offers you a huge range of features, including:

- Excellent accuracy.
- Pneumatic drive mechanism.
- Self-explanatory control pad with menu control in display.
- Easy-to-read LCD display.
- Automatic running of pre-learnt part programs.
- GO/± NG display at each measurement.
- Mains-independent operation with rechargeable battery.
- Easy handling with low weight.
- RS-232C data output port.
- USB Data output (for storing data only).
- DIGIMATIC data input for when using a digital indicator (e.g. when testing perpendicularity).
- Statistic processing.

518-351D-21 518-352D-21

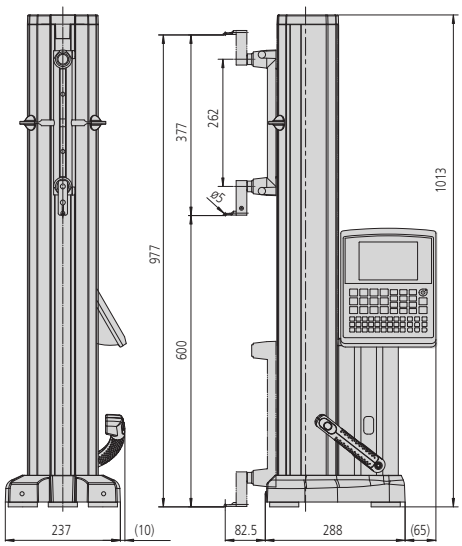

Specifications

Display	Graphic LCD 320x240 dots (with back light)
Language for display	English / German / French / Spanish / Italian / Dutch / Portuguese / Swedish / Turkish / Czech / Hungarian / Slovenian / Polish / Traditional Chinese (optional) / Japanese
Drive method	Manual/motor (5-40 mm/s, 7 steps)
Balancing method	Counter balance
Number of stored programs	50 (max.)
Number of stored data	60000 (max.)
Battery operation time	Approx. 5 hours
Measuring force	1 N

Standard accessories

No.	Description
12AAA715	Setting Block Linear Height/QM-Height, Probe Calibration
12AAF634	Eccentric Probe LH-600, Standard Accessory, Ø5mm
12AAF712	Battery Pack, LH-600, Battery Pack for LH-600 C/D/E
223587	Dust Cover LH-600
357651	AC-Adapter 12V, CEE Type, for SJ-210/SJ-310/LH-600/QM-Data 200

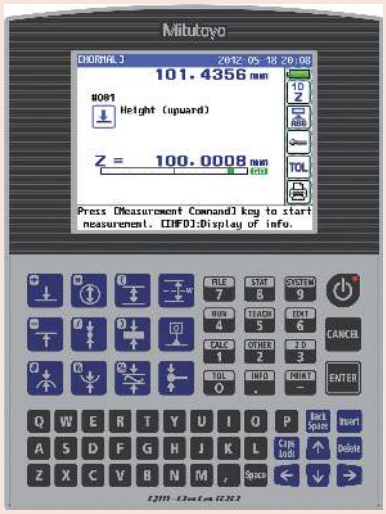

Scan QR Code with your mobile device and watch our product videos on YouTube

Metric/Inch

No.	Range [mm]	Slider stroke	Digital step	Accuracy	Perpendicularity	Straightness	Repeatability	Air floating	Remarks	Mass [kg]
518-351D-21	0 - 972	600 mm	0,0001 mm 0,001 mm 0,01 mm 0,1 mm	(1,1 + 0,6L/600) µm L = length (mm)	5 µm (after compensation)	4 µm (mechanical)	(2σ) Plane : 0,4 µm (2σ) Bore : 0,9 µm	yes, full/semi-floating	Without power grip	24.0
518-352D-21	0 - 972	600 mm	0,0001 mm 0,001 mm 0,01 mm 0,1 mm	(1,1 + 0,6L/600) µm L = length (mm)	5 µm (after compensation)	4 µm (mechanical)	(2σ) Plane : 0,4 µm (2σ) Bore : 0,9 µm	yes, full/semi-floating	With power grip	24.0

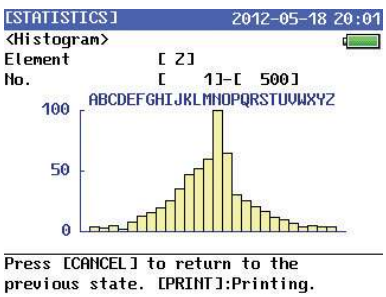

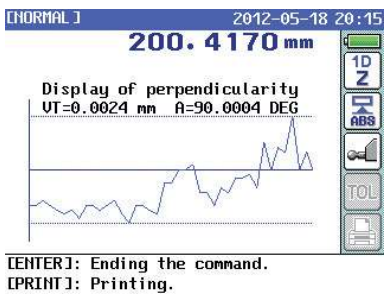

All products to be sold to commercial customers.
Product illustrations are without obligation. Product descriptions, in particular any and all technical specifications, are only binding when explicitly agreed upon.

Optional Accessories for Linear Height

Series 518

Optional accessories

No.	Description
12AAC072	Depth Probe for Height Gauge, 90mm Reach
12AAF666	Ball Probe Coaxial Type, D=1mm, 72mm Length
957261	Ball Probe Coaxial Type, D=2mm, 72mm Length
12AAF667	Ball Probe Coaxial Type, D=2mm, Ruby, 72mm Length
957262	Ball Probe Coaxial Type, D=3mm, 72mm Length
957263	Ball Probe Coaxial Type, D=4mm, 76mm Length
12AAB552	Ball Probe, Coaxial Type, D=10mm
12AAF668	Ball Probe Coaxial Type, D=10mm, 82mm Length
12AAF669	Ball Probe Coaxial Type, D=10mm, 120mm Length
12AAF670	Disk Probe Coaxial Type, D=5mm, 75mm Length
12AAF671	Disk Probe Coaxial Type, D=10mm, 59mm Length
957264	Disk Probe Coaxial Type, D=14mm, 59mm Length
957265	Disk Probe Coaxial Type, D=20mm, 48mm Length
12AAF672	Ball Probe Eccentric Type, D=1mm
12AAF673	Ball Probe Eccentric Type , D=2mm
12AAA788	Ball Probe Eccentric Type , D=4mm
12AAA789	Ball Probe Eccentric Type , D=6mm
226117	CMM Stylus Adapter M2
226118	CMM Stylus Adapter M3
12AAC073	Tapered Measuring Insert, D=22mm
12AAA787	Setting Block Linear Height/QM-Height, Probe Calibration and Taper Probe
12AAA792	Indicator Holder LH-600, For 8mm Stem
12AAA793	Probe Extension Holder, Height Gauge , 85mm
12AAB136	Cylindrical Probe, D=10mm
12AAF674	Auxiliary Weight, LH-600, 1 pcs.
K650986	Stylus Kit M3 for Linear Height, with Holder, 6 Probes, 2 Extensions
12AAN050	Receipt Printer for LH-600E/EG, CEE Type
12AAN052	Printer Paper for 12AAN050, 10 pcs.
63AAA043	Digimatic Interface DMX-0-1 USB, 1x RS-232C Connector
12AAA807D	Cable RS-232C 2m Null Modem Type, Crossed Type
12AAA804	Printer Cable 2m, for Page Printer

Recommended model for A4 printer: EPSON LQ-590
K650986: holder M3/disk probe Ø 12 mm/
ruby ball probe Ø 1, 2, 3, 4 mm/extension 10, 20 mm

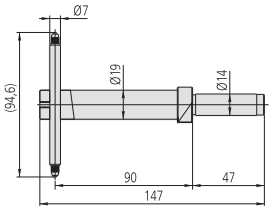
12AAC072

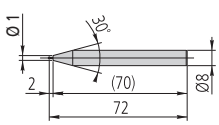
12AAF666

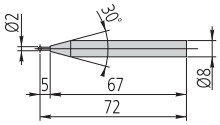
957261

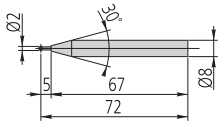
12AAF667

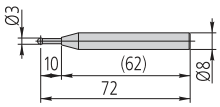
957262

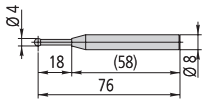
957263

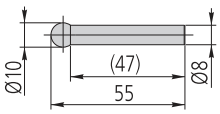
12AAB552

12AAF668

12AAF669

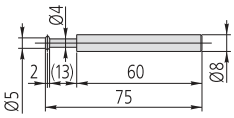
12AAF670

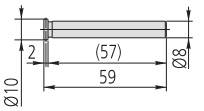
12AA671

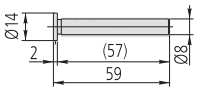
957264

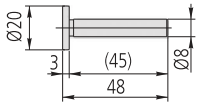
957265

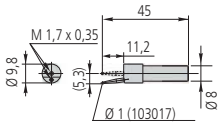
12AAF672

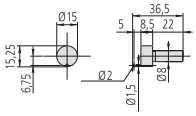
12AAF673

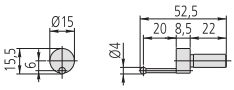
12AAA788

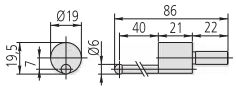
12AAA789

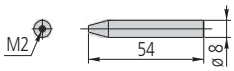
226117

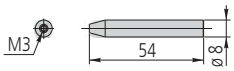
226118

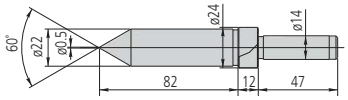
12AAC073

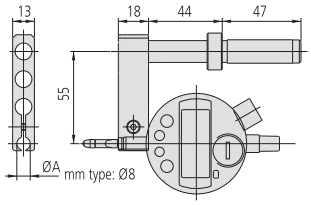
12AAA792
(with optional indicator)

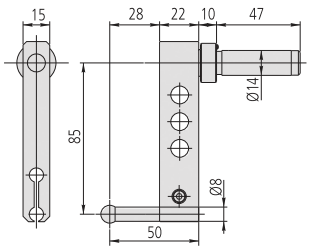
12AAA793
(with optional measuring insert)

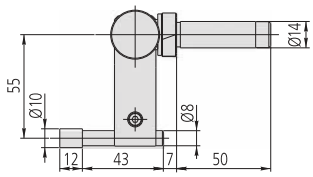
12AAB136

K650986

12AAN050

All products to be sold to commercial customers.
Product illustrations are without obligation. Product descriptions, in particular any and all technical specifications, are only binding when explicitly agreed upon.

Mitutoyo

ABSOLUTE Digimatic Indicators
Page 233

Dial Indicators
Page 248

Accessories for Indicator
Page 268

Lever Indicators
Page 278

Accessories for Dial Test Indicators
Page 288

Thickness Gauges, Caliper Gauges, Dial Tension Gauges
Page 290

All products to be sold to commercial customers.
Product illustrations are without obligation. Product descriptions, in particular any and all technical specifications, are only binding when explicitly agreed upon.

ABSOLUTE Digimatic Solar Indicators ID-SS

Functions	Series 543
Digimatic data output	■
ORIGIN (ABS-Zero)	■
Counting direction switchable	■

Specifications

Display	LCD character height 9 mm
Max. response speed	Unlimited
Alarm	Counting value composition error
Stem Ø	8 mm
Contact point	Carbide ball, thread M 2,5 x 0,45 mm
Power supply	Solar cell usable from 40 Lux illumination

Optional accessories

No.	Description
905338	Digimatic Cable, Flat Straight Type, 1m
905409	Digimatic Cable, Flat Straight Type, 2m
06AFM380F	USB Input Tool Direct (Digimatic USB), Digi/Digi2, Flat Straight Type
264-622	U-WAVE fit, IP67 Type, Wireless Transmitter for Micrometer
264-623	U-WAVE fit, Buzzer Type, Wireless Transmitter for Micrometer
264-626	U-WAVE fit Bluetooth, IP67 Type, Wireless Transmitter for Micrometer
264-627	U-WAVE fit Bluetooth, Buzzer Type, Wireless Transmitter for Micrometer
02AZF670	U-WAVE fit Transmitter Mounting Plate, for ID-C and ID-S Digital Indicator
02AZD730G	U-WAVE-T, IP67 Type, Wireless Transmitter
02AZD880G	U-WAVE-T, Buzzer Type, Wireless Transmitter
02AZE200	U-WAVE Transmitter Mounting Plate, Universal Type
02AZD790F	U-WAVE-T Connection Cable F, Flat Straight Type
21EZA198	Spindle Lifting Lever, for Digital Indicator, A-Type Dial Indicator Series 2/3/4
21JZA295	Spindle Lifting Cable, for Indicator, L=500mm
21EZA105	Spindle Lifting Knob, for 12,5mm, Metric

For USB Input Tool Direct cable:
a footswitch (no. 937179T), a USB- footswitch adapter (no. 06ADV384) and USB-ITPAK Software (no. 06AFM386) are required.

Consumable spares

No.	Description
901312	Contact Element Ball Point, M2,5x0,45, 7,3mm Length, Carbide, Metric

Series 543

This solar-powered, standard model is environmentally friendly and very easy to use.
The ABSOLUTE Digimatic Solar Indicator ID-SS offers you the following benefits:

- The ABSOLUTE sensor means you don't have to carry out origin setting every time you power it on, saving you time and hassle.
- There's no battery to change.
- The solar cell is operates from just 40 Lux.
- Super-capacitor charge storage enables you to work in low-level lighting conditions of less than 40 Lux.
- You can access all functions by using the large, user-friendly buttons on the front of the indicator.
- Large character height of 9 mm provides good readability.

543-500B

543-505B

Metric

No.	No. Lug back plate	Range	Digital step	Max. Permissible Error E MPE	H MPE (Hysteresis)	R MPE (Repeatability)	Measuring force [N]	Protection	Mass lug/ plain [g]
543-500B	543-500	12,7 mm	0,001 mm	0,003 mm	0,002 mm	0,002 mm	≤ 1,5	IP42	150/140
543-505B	543-505	12,7 mm	0,01 mm	0,02 mm	0,02 mm	0,01 mm	≤ 1,5	IP42	150/140

No. with "B": Flat back plate

All products to be sold to commercial customers.
Product illustrations are without obligation. Product descriptions, in particular any and all technical specifications, are only binding when explicitly agreed upon.

ABSOLUTE Digimatic Solar Indicators ID-SS

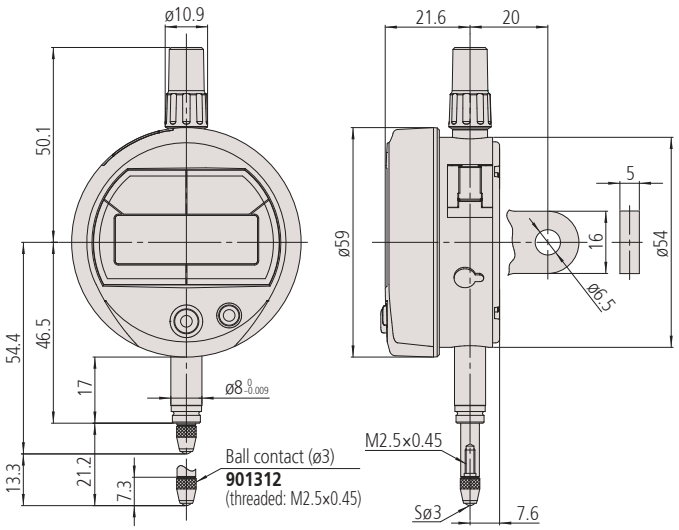

All products to be sold to commercial customers.
Product illustrations are without obligation. Product descriptions, in particular any and all technical specifications, are only binding when explicitly agreed upon.

ABSOLUTE Digimatic Indicators ID-SX

Functions	Series 543
Digimatic data output	■
ON/OFF	■
ORIGIN (ABS-Zero)	■
Counting direction switchable	■

Specifications

Display	LCD, character height 9 mm
Max. response speed	Unlimited
Alarm	Low voltage, counting value composition error
Stem Ø	8 mm
Contact point	Carbide ball, thread M 2,5 x 0,45 mm
Power supply	1 battery SR-44
Battery life	Approx. 18000 hours (0,001 mm type), approx. 20000 hours (0,01 mm type)

Optional accessories

No.	Description
905409	Digimatic Cable, Flat Straight Type, 2m
905338	Digimatic Cable, Flat Straight Type, 1m
06AFM380F	USB Input Tool Direct (Digimatic USB), Digi/Digi2, Flat Straight Type
264-623	U-WAVE fit, Buzzer Type, Wireless Transmitter for Micrometer
264-622	U-WAVE fit, IP67 Type, Wireless Transmitter for Micrometer
264-627	U-WAVE fit Bluetooth, Buzzer Type, Wireless Transmitter for Micrometer
264-626	U-WAVE fit Bluetooth, IP67 Type, Wireless Transmitter for Micrometer
02AZF670	U-WAVE fit Transmitter Mounting Plate, for ID-C and ID-S Digital Indicator
02AZD790F	U-WAVE-T Connection Cable F, Flat Straight Type
21JZA295	Spindle Lifting Cable, for Indicator, L=500mm
21EZA198	Spindle Lifting Lever, for Digital Indicator, A-Type Dial Indicator Series 2/3/4
21EZA105	Spindle Lifting Knob, for 12,5mm, Metric
238774	Silicon rubber boot for ID-C, ID-N, ID-S

For USB Input Tool Direct cable:
a footswitch (no. 937179T), a USB- footswitch adapter (no. 06ADV384) and USB-ITPAK Software (no. 06AFM386) are required.
238774 only for 543-794B

Consumable spares

No.	Description
938882	Battery SR44 1.5V
901312	Contact Element Ball Point, M2,5x0,45, 7,3mm Length, Carbide, Metric
21EAA423	NBR Rubber Boot, Digital Gauge Series 543

21EAA423 only for 543-794B

21EZA198

21JZA295

Series 543

ABSOLUTE®
IP42
IP53

This is a standard model of indicator that is reliable and easy to use.
The ABSOLUTE Digimatic Indicator ID-S offers you the following benefits:

- The ABSOLUTE sensor means you don't have to carry out origin setting every time you power it on, saving you time and hassle.
- You can access all functions by using the large, user-friendly buttons on the front of the indicator.
- Large character height of 9 mm provides good readability.
- Exceptional battery life.

543-781B

543-790B

543-794B

Metric

No.	No. Lug back plate	Range	Digital step	Max. Permissible Error E MPE	H MPE (Hysteresis)	R MPE (Repeatability)	Measuring force [N]	Protection	Mass lug/ plain [g]
543-781B	543-781	12,7 mm	0,01 mm	0,02 mm	0,02 mm	0,01 mm	≤ 1,5	IP42	150/140
543-790B	543-790	12,7 mm	0,001 mm	0,003 mm	0,002 mm	0,002 mm	≤ 1,5	IP42	150/140
543-794B	543-794	12,7 mm	0,001 mm	0,003 mm	0,002 mm	0,002 mm	≤2,5	IP53	155/155

No. with "B": Flat back plate

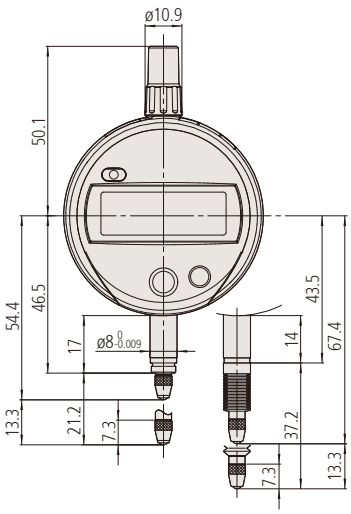

IP53 model

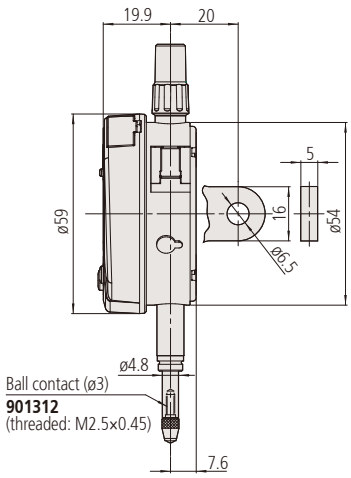

All products to be sold to commercial customers.
Product illustrations are without obligation. Product descriptions, in particular any and all technical specifications, are only binding when explicitly agreed upon.

Mitutoyo

ABSOLUTE Digimatic Indicators ID-U

Series 575

This is a slim type of digital indicator with a 25 mm range.
The ABSOLUTE Digimatic Indicator ID-U offers you the following benefits:

- The ABSOLUTE sensor means you don't have to carry out origin setting every time you power it on, saving you time and hassle.
- Its compact design makes it ideal for installing into measuring fixtures.
- Exceptional battery life.

575-121

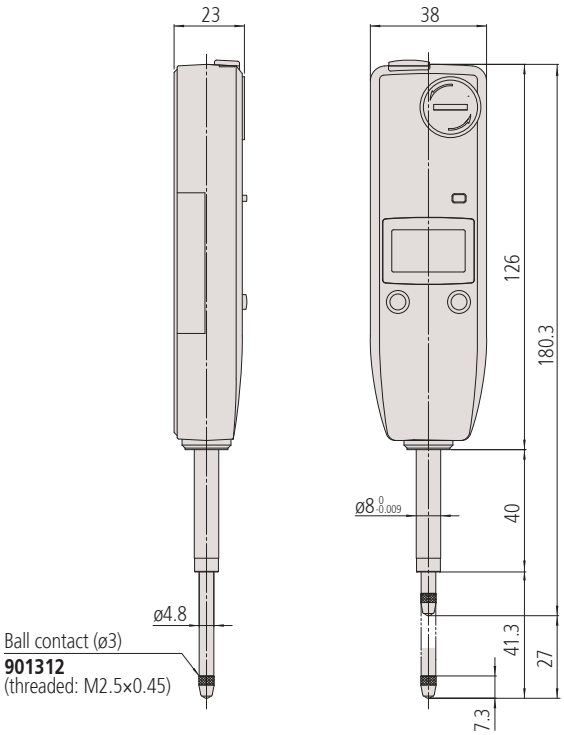

Functions	Series 575
Digimatic data output	●
ON/OFF	●
ORIGIN (ABS-Zero)	●
Counting direction switchable	●

Specifications

Display	LCD, character height 8,5 mm
Max. response speed	Unlimited
Alarm	Low voltage, counting value composition error
Stem Ø	8 mm
Contact point	Carbide ball, thread M 2,5 x 0,45 mm
Power supply	1 battery SR-44
Battery life	Approx. 20000 hours

Optional accessories

No.	Description
905338	Digimatic Cable, Flat Straight Type, 1m
905409	Digimatic Cable, Flat Straight Type, 2m
06AFM380F	USB Input Tool Direct (Digimatic USB), Digi/Digi2, Flat Straight Type
02AZD880G	U-WAVE-T, Buzzer Type, Wireless Transmitter
02AZD730G	U-WAVE-T, IP67 Type, Wireless Transmitter
02AZD790F	U-WAVE-T Connection Cable F, Flat Straight Type
21JZA295	Spindle Lifting Cable, for Indicator, L=500mm

21JZA295: moving measuring range max. 12mm
For USB Input Tool Direct cable:
a footswitch (no. 937179T), a USB- footswitch adapter (no. 06ADV384) and USB-ITPAK Software (no. 06ADV386) are required.

Consumable spares

No.	Description
938882	Battery SR44 1.5V
901312	Contact Element Ball Point, M2,5x0,45, 7,3mm Length, Carbide, Metric

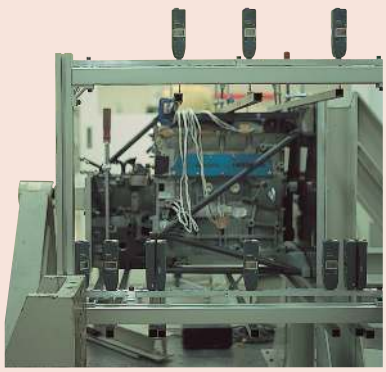

Metric

No.	Range	Digital step	Max. Permissible Error E MPE	H MPE (Hysteresis)	R MPE (Repeatability)	Measuring force [N]	Protection	Mass [g]
575-121	25,4 mm	0,01 mm	0,02 mm	0,02 mm	0,01 mm	≤ 1,8	IP42	140

All products to be sold to commercial customers.
Product illustrations are without obligation. Product descriptions, in particular any and all technical specifications, are only binding when explicitly agreed upon.

ABSOLUTE Digimatic Indicators ID-C

Functions	Series 543
DATA/HOLD	●
Digimatic data output	●
ON/OFF	●
ABS / INC (INC ZERO)	●
PRESET	●
Selectable resolution	●
GO/±NG judgement	●
Calculation function (with formula)	●
Counting direction switchable	●

Series 543

This is a multifunction indicator that is reliable and easy to use.
The ABSOLUTE Digimatic Indicator ID-C offers you the following benefits:

- The ABSOLUTE sensor means you don't have to carry out origin setting every time you power it on, saving you time and hassle.
- GO/±NG judgement is performed by setting the upper and lower tolerances.
- You can make simple calculations by a user-definable factor using the formula Ax (‚x' is spindle displacement).
- Large character height of 11mm provides good readability.
- Display 330° rotatable.
- A function lock protects the display against unauthorised use.

Specifications

Display	LCD, character height 11 mm, rotable 330°
Max. response speed	Unlimited
Alarm	Low voltage, counting value composition error, overflow error, tolerance limit setting error
Stem Ø	8 mm
Contact point	Carbide ball, thread M 2,5 x 0,45 mm
Power supply	1 battery SR-44
Battery life	Approx. 7000h

12,7 mm range model

25,4 mm range model

50,8 mm range model

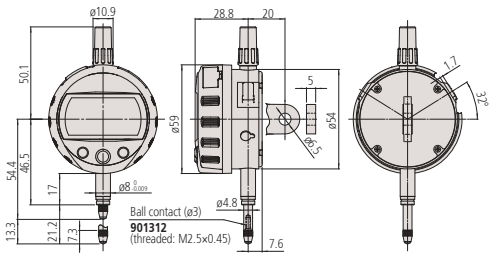

12,7 mm range models

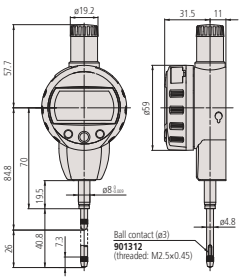

25,4 mm range models

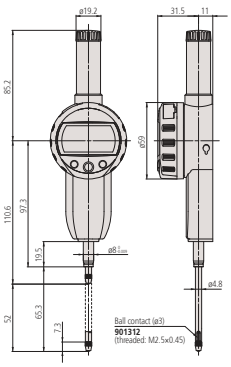

50,8 mm range models

Optional accessories

No.	Description
905338	Digimatic Cable, Flat Straight Type, 1m
905409	Digimatic Cable, Flat Straight Type, 2m
06AFM380F	USB Input Tool Direct (Digimatic USB), Digi/Digi2, Flat Straight Type
264-623	U-WAVE fit, Buzzer Type, Wireless Transmitter for Micrometer
264-622	U-WAVE fit, IP67 Type, Wireless Transmitter for Micrometer
264-627	U-WAVE fit Bluetooth, Buzzer Type, Wireless Transmitter for Micrometer
264-626	U-WAVE fit Bluetooth, IP67 Type, Wireless Transmitter for Micrometer
02AZF670	U-WAVE fit Transmitter Mounting Plate, for ID-C and ID-S Digital Indicator
02AZD880G	U-WAVE-T, Buzzer Type, Wireless Transmitter
02AZD730G	U-WAVE-T, IP67 Type, Wireless Transmitter
02AZE200	U-WAVE Transmitter Mounting Plate, Universal Type
02AZD790F	U-WAVE-T Connection Cable F, Flat Straight Type
21JZA295	Spindle Lifting Cable, for Indicator, L=500mm
21JZA301	Spindle Lifting Cable with Auto Stop, for Indicator, L=300mm
21EZA198	Spindle Lifting Lever, for Digital Indicator, A-Type Dial Indicator Series 2/3/4
21EZA105	Spindle Lifting Knob, for 12,5mm, Metric
21EZA197	Spindle Lifting Knob, for 25,4mm Range
21EZA200	Spindle Lifting Knob, for 50,8mm Range
137693	Spindle Lifting Handle for Indicator, for Plunger
02ACA571	Auxiliary Spindle Spring, for 25,4mm Range
02ACA773	Auxiliary Spindle Spring, for 50mm Range

02ACA571 and 02ACA773: required when orienting the indicator upside down
21EZA105: not available for low measuring force models
21JZA295: moving measuring range max. 28 mm

Consumable spares

No.	Description
901312	Contact Element Ball Point, M2,5x0,45, 7,3mm Length, Carbide, Metric
938882	Battery SR44 1.5V

All products to be sold to commercial customers.
Product illustrations are without obligation. Product descriptions, in particular any and all technical specifications, are only binding when explicitly agreed upon.

ABSOLUTE Digimatic Indicators ID-C

Metric

No.	No. Lug back plate	Range	Digital step	Max. Permissible Error E MPE	H MPE (Hysteresis)	R MPE (Repeatability)	Measuring force [N]	Protection	Mass [g]
543-390B	543-390	12,7 mm	0,001 mm	0,003 mm	0,002 mm	0,002 mm	≤ 1,5	IP42	170
543-394B	543-394	12,7 mm	0,001 mm	0,003 mm	0,002 mm	0,002 mm	0,4-0,7	IP42	170
543-400B	543-400	12,7 mm	0,01 mm	0,02 mm	0,02 mm	0,01 mm	≤ 1,5	IP42	170
543-404B	543-404	12,7 mm	0,01 mm	0,02 mm	0,02 mm	0,01 mm	0,4-0,7	IP42	170
543-470B		25,4 mm	0,001 mm	0,003 mm	0,002 mm	0,002 mm	≤1,8	IP42	190
543-474B		25,4 mm	0,01 mm	0,02 mm	0,02 mm	0,01 mm	≤1,8	IP42	190
543-490B		50,8 mm	0,001 mm	0,005 mm	0,002 mm	0,002 mm	≤2,3	IP42	260
543-494B		50,8 mm	0,01 mm	0,04 mm	0,02 mm	0,01 mm	≤2,3	IP42	260

Setting measuring force on low measuring force models

•543-404/404B

Spindle orientation	Spring	Weight (approximately 0.1N)	Maximum measuring force
Pointing vertically downward	Yes	Yes	0.5N
	Yes	No	0.4N
	No	Yes	0.3N
	No	No	0.2N
Horizontal	Yes	No	0.2N

•543-394/394B

Spindle orientation	Spring	Weight (approximately 0.1N)	Maximum measuring force
Pointing vertically downward	Yes	Yes	0.7N
	Yes	No	0.6N
	No	Yes	0.4N
	No	No	Not defined
Horizontal	Not defined		

Calculation : f(x) = Ax
Mounting the ID-C on a measuring fixture and setting the multiplying factor "A" (between 0,0001 and 99,9999) allows direct measurement without using a conversion table and improves measurement efficiency

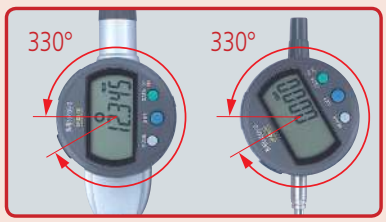

330° rotary display
The display can be rotated 330°, allowing use at a position where you can easily read the measurement value

Function locking
Ensures reliability of measurement by locking the settings to prevent preset function settings from being changed by mistake

Large LCD
The large LCD incorporates 11 mm characters making measurement values much easier to read

Tolerance function
2 kinds of tolerance visualisation

All products to be sold to commercial customers.
Product illustrations are without obligation. Product descriptions, in particular any and all technical specifications, are only binding when explicitly agreed upon.

ABSOLUTE Digimatic Indicators Max/Min/RANGE ID-C

Functions	Series 543
DATA/HOLD	●
PRESET 3x	●
Digimatic data output	●
ON/OFF	●
MAX/MIN/RANGE	●
ABS / INC (INC ZERO)	●
Analog bar resolution switchable	●
Function lock	●
GO/±NG judgement	●
Calculation function (with formula)	●
Fast measurement mode	●
Counting direction switchable	●

Specifications

Display	LCD, character height: 8 mm, rotatable 330°
Max. response speed	Unlimited
Measurement frequency (MAX/MIN/RANGE)	Standard mode: 10 times/s fast mode: 50 times/s (plunger speed max. 50 µm/s for peak measurement)
Alarm	Low voltage, overflow error, tolerance limit setting error
Stem Ø	8 mm
Contact point	Carbide ball, thread M 2,5 x 0,45 mm
Power supply	1 Battery CR-2032
Battery life	Standard mode: approx. 1 year, fast mode: approx. 4,5 month

Optional accessories

No.	Description
905338	Digimatic Cable, Flat Straight Type, 1m
905409	Digimatic Cable, Flat Straight Type, 2m
06AFM380F	USB Input Tool Direct (Digimatic USB), Digi/Digi2, Flat Straight Type
264-623	U-WAVE fit, Buzzer Type, Wireless Transmitter for Micrometer
264-622	U-WAVE fit, IP67 Type, Wireless Transmitter for Micrometer
264-627	U-WAVE fit Bluetooth, Buzzer Type, Wireless Transmitter for Micrometer
264-626	U-WAVE fit Bluetooth, IP67 Type, Wireless Transmitter for Micrometer
02AZF670	U-WAVE fit Transmitter Mounting Plate, for ID-C and ID-S Digital Indicator
02AZD880G	U-WAVE-T, Buzzer Type, Wireless Transmitter
02AZD730G	U-WAVE-T, IP67 Type, Wireless Transmitter
02AZE200	U-WAVE Transmitter Mounting Plate, Universal Type
02AZD790F	U-WAVE-T Connection Cable F, Flat Straight Type
21JZA295	Spindle Lifting Cable, for Indicator, L=500mm
21EZA198	Spindle Lifting Lever, for Digital Indicator, A-Type Dial Indicator Series 2/3/4
21EZA105	Spindle Lifting Knob, for 12,5mm, Metric
21EZA313	USB Interface for PC Setup, ID-C Indicator

Consumable spares

No.	Description
05SAA217D	Lithium battery CR-2032, 1 pcs.
901312	Contact Element Ball Point, M2,5x0,45, 7,3mm Length, Carbide, Metric

Series 543

ABSOLUTE®

IP42

This indicator is the MAX/MIN/RANGE value holding function model
It offers the following benefits:

- The MAX/MIN/RANGE (run-out value) can be measured
- A fast measurement frequency mode(detection cycle 20 ms or 50 times/s) is selectable to measure in the peak detection mode (MAX/MIN/RANGE) more reliably
- Easy indicator setup via a setup menu
- Analogue bar graph in the display (12 different scales switchable)
- GO/±NG tolerance judgement function
- This indicator enables the use of a calculation function for the measured value Ax
- Coefficient A is freely definable and x = displacement of the plunger
- A USB interface box can be used to set up the indicator from PC via dedicated software

543-300B

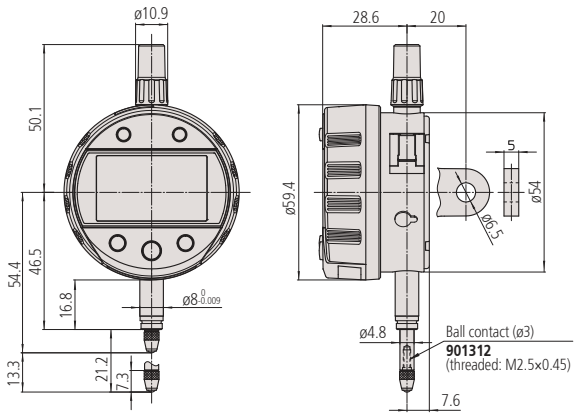

Metric

No.	No. Lug back plate	Range	Digital step	Max. Permissible Error E MPE	H MPE (Hysteresis)	R MPE (Repeatability)	Measuring force [N]	Protection	Mass lug/ plain [g]
543-300B	543-300	12,7 mm	0,001 mm	0,003 mm	0,002 mm	0,002 mm	≤ 1,5	IP42	180/170

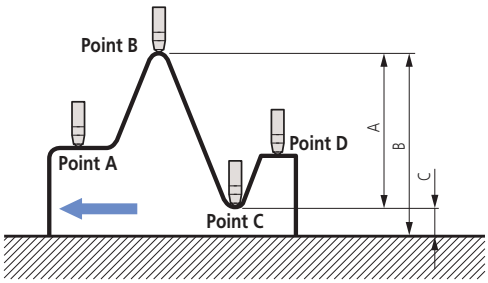

Difference/Runout measurement
Example : Indicator travel from points A to D : Difference (or Total Runout) is displayed as A. Dimensions B (maximum value) and C (minimum value) can be measured with a simple key sequence.

543-300B
7001-10

All products to be sold to commercial customers.
Product illustrations are without obligation. Product descriptions, in particular any and all technical specifications, are only binding when explicitly agreed upon.

Mitutoyo

ABSOLUTE Digimatic Indicators Calculation ID-C

Series 543

This indicator allows you to use a calculation function for the measured value $Ax+B+Cx^{-1}$

- The integrated calculation formula is useful in a variety of applications (e.g. roll diameter measurement)
- Coefficients A,B and C are freely definable. X = displacement of the plunger
- Analogue bar graph in the display (14 different scales switchable)
- GO/±NG tolerance judgement function
- MAX/MIN/RANGE function to measure peak values
- A fast measurement frequency mode(detection cycle 20 ms or 50 times/s) is selectable to measure in the peak detection mode (MAX/MIN/RANGE) more reliably
- Easy indicator setup via a setup menu
- A USB interface box can be used to set up the indicator from PC via dedicated software

543-340B

543-590B

543-595B

Functions	Series 543
DATA/HOLD	●
PRESET 3x	●
Digimatic data output	●
ON/OFF	●
MAX/MIN/RANGE	●
ABS / INC (INC ZERO)	●
Analog bar resolution switchable	●
Selectable resolution	●
Function lock	●
GO/±NG judgement	●
Calculation function (with formula)	●
Fast measurement mode	●

Specifications

Digital step	0,0002/ 0,0005/ 0,001/ 0,002/ 0,005/ 0,01/ 0,02/ 0,05/ 0,1/ 0,2/ 0,5/ 1 mm or non-unit (scale resolution is 0,001 mm)
Display	LCD, character height 8 mm, rotatable 330°
Max. response speed	Unlimited
Measurement frequency (MAX/MIN/RANGE)	Standard mode: 10 times/s fast mode: 50 times/s (plunger speed max. 50 µm/s for peak measurement)
Alarm	Low voltage, ABS composition error, overflow error, tolerance limit setting error
Stem Ø	8 mm
Contact point	Carbide ball, thread M 2,5 x 0,45 mm
Power supply	1 Battery CR-2032
Battery life	Standard mode: approx. 1 year fast mode: approx. 4,5 month

Metric

No.	Range	Max. Permissible Error E MPE	H MPE (Hysteresis)	R MPE (Repeatability)	Measuring force [N]	Protection	Mass [g]
543-340B	12,7 mm	0,003 mm	0,002 mm	0,002 mm	≤ 1,5	IP42	170
543-590B	25,4 mm	0,003 mm	0,002 mm	0,002 mm	≤1,8 N	IP42	190
543-595B	50,8 mm	0,006 mm	0,002 mm	0,002 mm	≤2,3 N	IP42	260

No.	Radius
21FAJ394	25-70 mm
K541281	50-100 mm
K541282	100-200 mm
21FAJ395	outside : 45-140 mm / inside : 65-100 mm

The accuracy of a radial measurement using the measuring bridges depends on the size of the radius to be measured and the form error of the workpiece.

All products to be sold to commercial customers.
Product illustrations are without obligation. Product descriptions, in particular any and all technical specifications, are only binding when explicitly agreed upon.

ABSOLUTE Digimatic Indicators Calculation ID-C

Optional accessories

No.	Description
905338	Digimatic Cable, Flat Straight Type, 1m
905409	Digimatic Cable, Flat Straight Type, 2m
06AFM380F	USB Input Tool Direct (Digimatic USB), Digi/Digi2, Flat Straight Type
264-623	U-WAVE fit, Buzzer Type, Wireless Transmitter for Micrometer
264-622	U-WAVE fit, IP67 Type, Wireless Transmitter for Micrometer
264-627	U-WAVE fit Bluetooth, Buzzer Type, Wireless Transmitter for Micrometer
264-626	U-WAVE fit Bluetooth, IP67 Type, Wireless Transmitter for Micrometer
02AZF670	U-WAVE fit Transmitter Mounting Plate, for ID-C and ID-S Digital Indicator
02AZD880G	U-WAVE-T, Buzzer Type, Wireless Transmitter
02AZD730G	U-WAVE-T, IP67 Type, Wireless Transmitter
02AZE200	U-WAVE Transmitter Mounting Plate, Universal Type
02AZD790F	U-WAVE-T Connection Cable F, Flat Straight Type
21JZA295	Spindle Lifting Cable, for Indicator, L=500mm
21EZA198	Spindle Lifting Lever, for Digital Indicator, A-Type Dial Indicator Series 2/3/4
21EZA105	Spindle Lifting Knob, for 12,5mm, Metric
21EZA197	Spindle Lifting Knob, for 25,4mm Range
21EZA200	Spindle Lifting Knob, for 50,8mm Range
21EZA313	USB Interface for PC Setup, ID-C Indicator
21FAJ394	Angle Plate for Calc. ID-C, Radius: 25-70mm
K541281	Angle Plate for Calc. ID-C, Radius: 50-100mm
K541282	Angle Plate for Calc. ID-C, Radius: 100-200mm
21FAJ395	Roll Type Base, Outside: 45-140mm, Inside:65-100mm

Consumable spares

No.	Description
05SAA217D	Lithium battery CR-2032, 1 pcs.
901312	Contact Element Ball Point, M2,5x0,45, 7,3mm Length, Carbide, Metric

21FAJ395

21FAJ394

K541281

K541282

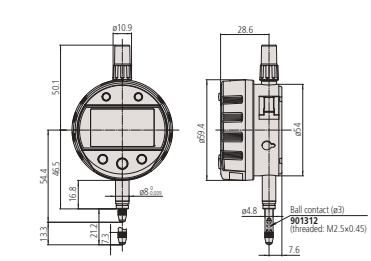

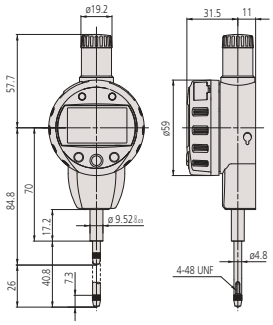

25,4 mm range models

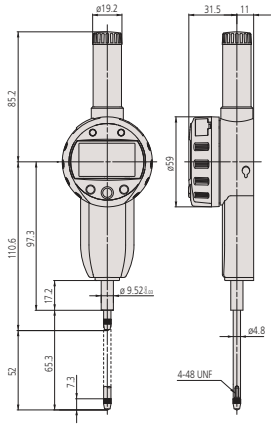

50,8 mm range models

K541282

Custom-made solution

Custom-made solution

21FAJ395 (similar)

21FAJ395 (similar)

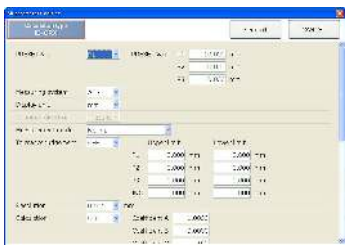

Setup software available for download at www.mitutoyo.eu (Registration is required)
(optional USB Interface 21EZA313 is neccessary)

All products to be sold to commercial customers.
Product illustrations are without obligation. Product descriptions, in particular any and all technical specifications, are only binding when explicitly agreed upon.

ABSOLUTE Digimatic Indicators Bore Gauge ID-C

Series 543

This indicator is designed for inside diameter measurement applications on bore gauges
It offers the following benefits:

- Minimum value holding function that allows you to easily detect a hole diameter
- Analogue bar graph in the display (12 different scales switchable)
- The analogue bar graph enhances usability by adding a dial gauge "feel" to digital measurement
- GO/±NG tolerance judgement function
- A fast measurement frequency mode(detection cycle 20ms or 50times/s) is selectable to measure in the peak detection mode more reliably
- Easy indicator setup via a setup menu
- A USB interface box can be used to set up the indicator from PC via dedicated software

543-310B

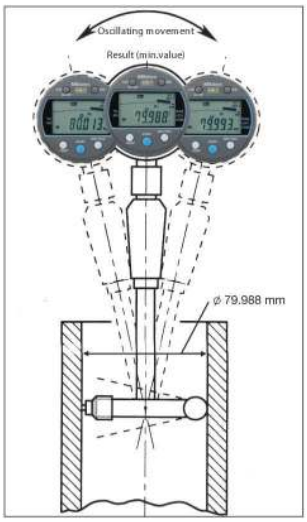

Metric

No.	Mass [g]	Range	Digital step	Max. Permissible Error E MPE	H MPE (Hysteresis)	R MPE (Repeatability)	Measuring force [N]	Protection
543-310B	170	12,7 mm	0,001/0,01 mm	0,003 mm	0,002 mm	0,002 mm	≤ 1,5	IP42

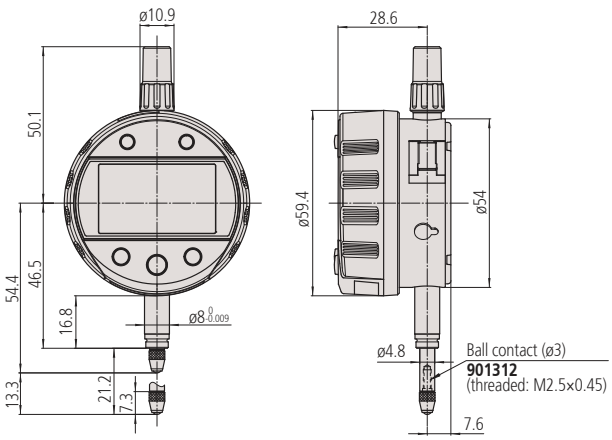

Functions	Series 543
DATA/HOLD	●
PRESET 3x	●
MIN Value Hold	●
Digimatic data output	●
ON/OFF	●
Analog bar resolution switchable	●
Function lock	●
GO/±NG judgement	●
Fast measurement mode	●

Specifications

Display	LCD, character height: 8 mm, rotatable 330°
Max. response speed	Unlimited
Measurement frequency (MAX/MIN/RANGE)	Standard mode: 10 times/s fast mode: 50 times/s (plunger speed max. 50 µm/s for peak measurement)
Alarm	Low voltage, composition error, overflow error, tolerance limit setting error
Stem Ø	8 mm
Contact point	Carbide ball, thread M 2,5 x 0,45 mm
Power supply	1 Battery CR-2032
Battery life	Standard mode: approx. 1 year fast mode: approx. 4,5 month

Optional accessories

No.	Description
905338	Digimatic Cable, Flat Straight Type, 1m
905409	Digimatic Cable, Flat Straight Type, 2m
06AFM380F	USB Input Tool Direct (Digimatic USB), Digi/Digi2, Flat Straight Type
264-623	U-WAVE fit, Buzzer Type, Wireless Transmitter for Micrometer
264-622	U-WAVE fit, IP67 Type, Wireless Transmitter for Micrometer
264-627	U-WAVE fit Bluetooth, Buzzer Type, Wireless Transmitter for Micrometer
264-626	U-WAVE fit Bluetooth, IP67 Type, Wireless Transmitter for Micrometer
02AZF670	U-WAVE fit Transmitter Mounting Plate, for ID-C and ID-S Digital Indicator
02AZD880G	U-WAVE-T, Buzzer Type, Wireless Transmitter
02AZD730G	U-WAVE-T, IP67 Type, Wireless Transmitter
02AZE200	U-WAVE Transmitter Mounting Plate, Universal Type
02AZD790F	U-WAVE-T Connection Cable F, Flat Straight Type
21EZA313	USB Interface for PC Setup, ID-C Indicator

Consumable spares

No.	Description
05SAA217D	Lithium battery CR-2032, 1 pcs.
901312	Contact Element Ball Point, M2,5x0,45, 7,3mm Length, Carbide, Metric

* if the detecting speed is >50 µm/s the peak value may not be displayed correctly.

All products to be sold to commercial customers.
Product illustrations are without obligation. Product descriptions, in particular any and all technical specifications, are only binding when explicitly agreed upon.

ABSOLUTE Digimatic Indicators Signal ID-C

Functions	Series 543
PRESET 3x	●
ON/OFF	●
Signal output: (+NG, OK, -NG)	●
Signal input: No-voltage input, (PRESET_RECALL/ZERO, HOLD_RESET)	●
MAX/MIN/RANGE	●
ABS / INC (INC ZERO)	●
Analog bar resolution switchable	●
Function lock	●
GO/±NG judgement via LED	●
GO/±NG judgement	●
Calculation function (with formula)	●
Counting direction switchable	●

Specifications

Display	LCD, character height 8 mm
Max. response speed	Unlimited
Measurement frequency (MAX/MIN/RANGE)	100 times/s (if the plunger speed >0,1 mm/s the peak value could not be displayed correctly.)
Alarm	Counting value composition error, overflow error, tolerance limit setting error
Stem Ø	8 mm
Contact point	Carbide ball, thread M 2,5 x 0,45 mm
Power supply	DC 5 - 24 V

Optional accessories

No.	Description
21EZA198	Spindle Lifting Lever, for Digital Indicator, A-Type Dial Indicator Series 2/3/4
21JZA295	Spindle Lifting Cable, for Indicator, L=500mm
21EZA105	Spindle Lifting Knob, for 12,5mm, Metric
238774	Silicon rubber boot for ID-C, ID-N, ID-S

Consumable spares

No.	Description
901312	Contact Element Ball Point, M2,5x0,45, 7,3mm Length, Carbide, Metric
21EAA423	NBR Rubber Boot, Digital Gauge Series 543

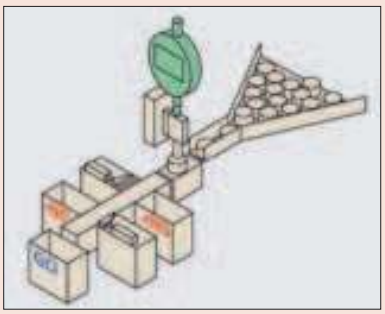

Series 543

ABSOLUTE IP54

This is an externally-powered Digimatic Indicator with a N-ch open drain –NG, OK, +NG output.

- Dust-protected and protected against splashing water, complying with IEC 60529 (equivalent to IP54)
- Measures MAX/MIN/RANGE (run-out value).
- Saves three different Preset and Tolerance settings.
- Fast measurement frequency mode (detection cycle 50 times/s) for reliable measurement in the peak detection mode (MAX/MIN/RANGE)
- Calculation function Ax. Coefficient A freely definable, x = displacement of the plunger
- Analogue bar graph in the display (12 different scales switchable)
- GO/±NG tolerance judgment function

543-350B

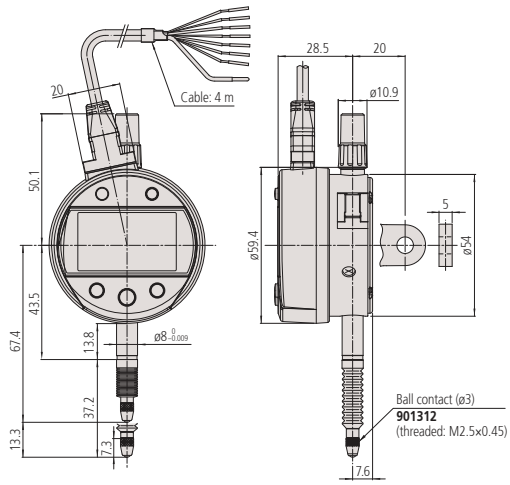

Metric

No.	No. Lug back plate	Range	Digital step	Max. Permissible Error E MPE	H MPE (Hysteresis)
543-350B	543-350	12,7 mm	0,001 mm	0,003 mm	0,002 mm

No.	R MPE (Repeatability)	Measuring force [N]	Protection
543-350B	0,002 mm	≤2,5	IP54

Logic of output signal	Signal name	Tolerance judgment results			Sensor signal synthesizing error Overflow error of display value
		-NG	OK	+NG	
Negative logic	$\overline{-NG}$ (Orange)	Low	High	High	High
	$\overline{OK}$ (Green)	High	Low	High	High
	$\overline{+NG}$ (Brawn)	High	High	Low	High
Positive logic	$\overline{-NG}$ (Orange)	High	Low	Low	Low
	$\overline{OK}$ (Green)	Low	High	Low	Low
	$\overline{+NG}$ (Brawn)	Low	Low	High	Low

Normal mode, Maximum value detection mode, Minimum value detection mode

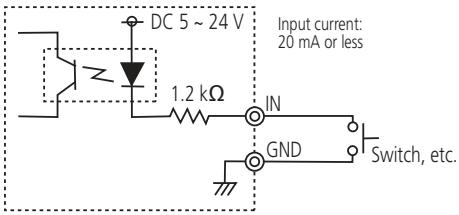

Circuit input

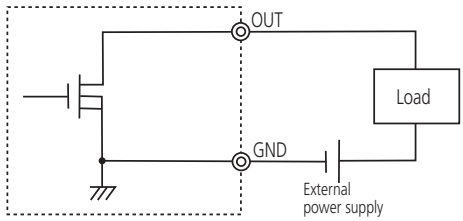

Load voltage: 5 ~ 24 V DC
Maximum load current: 100 mA or less

Circuit output

All products to be sold to commercial customers.
Product illustrations are without obligation. Product descriptions, in particular any and all technical specifications, are only binding when explicitly agreed upon.

Mitutoyo

ABSOLUTE Digimatic Indicators ID-N

Series 543

This is a slim back-plunger model that is highly resilient and robust. The ABSOLUTE Digimatic Indicator ID-N offers you the following benefits:

- It slim body design is ideal for multi-point measurements.
- The ABSOLUTE sensor means you don't have to carry out origin setting every time you power it on, saving you time and hassle.
- It has excellent resistance against water and dust (IP66 protection level) allowing you to use it in machining situations that include splashing coolant fluid.
- Switchable display orientation gives you more mounting options.
- You can perform GO/±NG judgement by setting the upper and lower tolerances.

543-575

Flexible installation options switchable display orientation (overhead use)

Width of 35 mm instead of 60 as standard Digimatic indicators

Metric

No.	Range	Digital step	Max. Permissible Error E MPE	H MPE (Hysteresis)	R MPE (Repeatability)	Measuring force [N]	Protection	Mass [g]
543-570	12,7 mm	0,01 mm	0,02 mm	0,02 mm	0,01 mm	≤2,5 N	IP66	130
543-575	12,7 mm	0,001/0,01 mm	0,003 mm	0,002 mm	0,002 mm	≤2,5 N	IP66	130

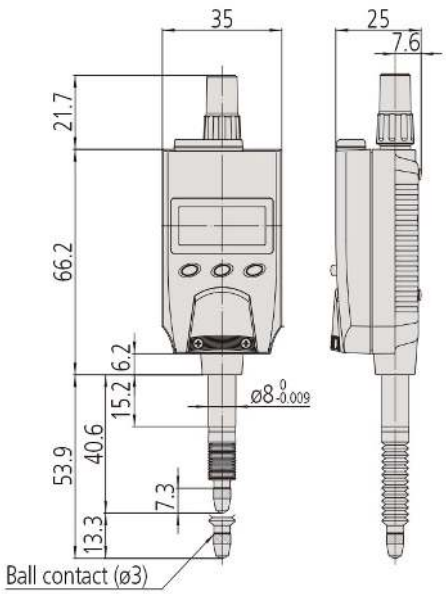

901312
(thread: M2.5×0.45)

Functions	Series 543
DATA/HOLD	●
Digimatic data output	●
ON/OFF	●
External PRESET / ZERO	●
PRESET	●
GO/±NG judgement	●
Counting direction switchable	●

Specifications

Display	LCD, character hight: 6,2 mm
Max. response speed	Unlimited
Alarm	Low voltage, counting value composition error, overflow error, tolerance limit setting error
Stem Ø	8 mm
Contact point	Carbide ball, thread M 2,5 x 0,45 mm
Power supply	1 battery SR-44
Battery life	Approx. 7000 hours

Optional accessories

No.	Description
21EAA194	Digimatic Cable for ID-N/ ID-B 1m
21EAA190	Digimatic Cable for ID-N/ ID-B 2m
06AFM380G	USB Input Tool Direct (Digimatic USB), Digi/Digi2, Flat Straigt IP Type
264-623	U-WAVE fit, Buzzer Type, Wireless Transmitter for Micrometer
264-622	U-WAVE fit, IP67 Type, Wireless Transmitter for Micrometer
264-627	U-WAVE fit Bluetooth, Buzzer Type, Wireless Transmitter for Micrometer
264-626	U-WAVE fit Bluetooth, IP67 Type, Wireless Transmitter for Micrometer
02AZF675	U-WAVE fit Transmitter Mounting Plate, for ID-N Digital Indicator
02AZD880G	U-WAVE-T, Buzzer Type, Wireless Transmitter
02AZD730G	U-WAVE-T, IP67 Type, Wireless Transmitter
02AZE200	U-WAVE Transmitter Mounting Plate, Universal Type
02AZD790G	U-WAVE-T Connection Cable G, Flat Straight IP Type
21EAA210	Digimatic Cable for External Preset/ Zero, 1 m, ID-N/ID-B Indicator
21EAA211	Digimatic Cable for External Preset/ Zero, 2 m, ID-N/ID-B Indicator
21EZA105	Spindle Lifting Knob, for 12,5mm, Metric
21EZA145	Back Plate with Center Lug ISO Type, for ID-N/ID-B Indicator
238774	Silicon rubber boot for ID-C, ID-N, ID-S

Consumable spares

No.	Description
938882	Battery SR44 1.5V
901312	Contact Element Ball Point, M2,5x0,45, 7,3mm Length, Carbide, Metric
21EAA423	NBR Rubber Boot, Digital Gauge Series 543

194EAA210

All products to be sold to commercial customers.
Product illustrations are without obligation. Product descriptions, in particular any and all technical specifications, are only binding when explicitly agreed upon.

ABSOLUTE Digimatic Indicators ID-B

Functions	Series 543
DATA/HOLD	●
Digimatic data output	●
ON/OFF	●
External PRESET / ZERO	●
PRESET	●
GO/±NG judgement	●
Counting direction switchable	●

Specifications

Display	LCD, character height: 6,2 mm
Max. response speed	Unlimited
Alarm	Low voltage, counting value composition error, overflow error, tolerance limit setting error
Stem Ø	8 mm
Contact point	Carbide ball, thread M 2,5 x 0,45 mm
Power supply	1 battery SR-44
Battery life	Approx. 7000 hours

Optional accessories

No.	Description
21EAA194	Digimatic Cable for ID-N/ ID-B 1m
21EAA190	Digimatic Cable for ID-N/ ID-B 2m
06AFM380G	USB Input Tool Direct (Digimatic USB), Digi/Digi2, Flat Straigt IP Type
02AZD880G	U-WAVE-T, Buzzer Type, Wireless Transmitter
02AZD730G	U-WAVE-T, IP67 Type, Wireless Transmitter
02AZD790G	U-WAVE-T Connection Cable G, Flat Straight IP Type
21EAA211	Digimatic Cable for External Preset/ Zero, 2 m, ID-N/ID-B Indicator
21EAA210	Digimatic Cable for External Preset/ Zero, 1 m, ID-N/ID-B Indicator
21EZA145	Back Plate with Center Lug ISO Type, for ID-N/ID-B Indicator
21EAA212	Silicon Rubber Boot, for ID-B, Series 1/2

Consumable spares

No.	Description
938882	Battery SR44 1.5V
901312	Contact Element Ball Point, M2,5x0,45, 7,3mm Length, Carbide, Metric
21AAB562	NBR Rubber Boot, Digital Gauge ID-B, Dial Gauge IP63/IP64

21EAA194

21EAA210

Series 543

This is a back-plunger model that is highly resilient and robust. The ABSOLUTE Digimatic Indicator ID-B offers you the following features:

- It is a back plunger type, with the display viewed from above.
- Its slim body design is ideal for multi-point measurements.
- The ABSOLUTE sensor means you don't have to carry out origin setting every time you power it on, saving you time and hassle.
- It has excellent resistance against water and dust (IP66 protection level) allowing you to use it in machining situations that include splashing coolant fluid.
- Switchable display orientation gives you more mounting options.
- You can perform GO/±NG judgement.

543-580

Flexible installation options with switchable display orientation (overhead use)

IP66

Metric

No.	Range	Digital step	Max. Permissible Error E MPE	H MPE (Hysteresis)	R MPE (Repeatability)	Measuring force [N]	Protection	Mass [g]
543-580	5 mm	0,01 mm	0,02 mm	0,02 mm	0,01 mm	≤2 N	IP66	130
543-585	5 mm	0,001/0,01 mm	0,003 mm	0,002 mm	0,002 mm	≤2 N	IP66	130

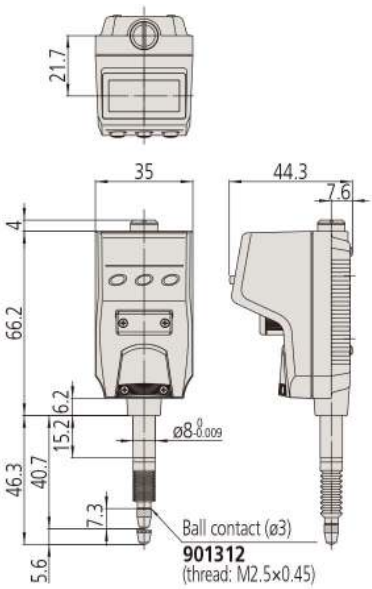

All products to be sold to commercial customers.
Product illustrations are without obligation. Product descriptions, in particular any and all technical specifications, are only binding when explicitly agreed upon.

Digimatic Indicators ID-H

Series 543

This is a superior multi-function indicator that gives you high accuracy and high resolution of 0,0005mm.
The Digimatic Indicator ID-H offers you the following benefits:

- 2-colour LCD backlight (green and red) provides you with visual GO/±NG tolerance judgement and analogue bar-graph display.
- You can display the maximum, minimum or range (runout value).
- Lifting mechanism over 30mm with cable release (optional).
- You can carry out zero-setting and presetting with the optional remote controller, without having to touch the indicator.
- The remote control system can be implemented in advance with the built-in RS-232 interface and a PC.
- External power supply via AC-Adapter.

543-561D

21EZA099:
Data export
Reset Max/Min/TIR
Max/Min/TIR switchover
Call PRESET value

The display switches from green to red backlight if the upper or lower tolerance limit is exceeded

Metric

No.	Range	Digital step	Max. Permissible Error E MPE	H MPE (Hysteresis)	R MPE (Repeatability)	Measuring force [N]	Protection	Mass [g]
543-561D	30,4 mm	0,0005/0,001 mm	0,0015 mm	0,0015 mm	0,001 mm	≤2	IP30	290
543-563D	60,9 mm	0,0005/0,001 mm	0,0025 mm	0,0025 mm	0,001 mm	≤2,5	IP30	305

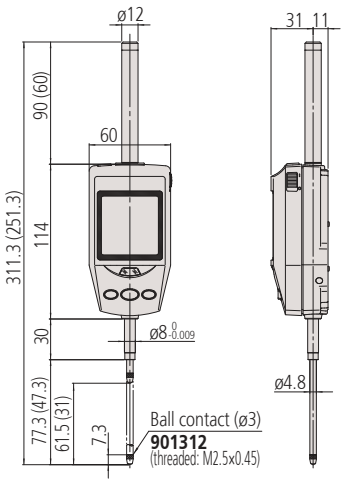

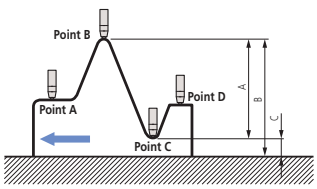

Difference/Runout measurement
Example : indicator travel from points A to D. Difference (or Total Runout) is displayed as A. Dimensions B (maximum value) and C (minimum value) can be recalled from memory with a simple key sequence.

Functions	Series 543
DATA/HOLD	●
Digimatic data output	●
ON/OFF	●
MAX/MIN/RANGE	●
RS-232C Output/Input	●
RS-232C Input*	●
ZERO SET	●
PRESET	●
Analog bar resolution switchable	●
Selectable resolution	●
Function lock	●
GO/±NG judgement	●
Counting direction switchable	●

Specifications

Display	LCD, character height: 9,5 mm
Max. response speed	1000 mm/s
Alarm	Counting value composition error, overflow error, tolerance setting error
Stem Ø	8 mm
Contact point	Carbide ball, thread M 2,5 x 0,45 mm
Power supply	AC adapter 6 V DC, 2A

Standard accessories

No.	Description
06AFZ950D	AC-Adapter, 6V 2A, CEE Type, Germany (Europe)
137693	Spindle Lifting Handle for Indicator, for Plunger

Optional accessories

No.	Description
936937	Digimatic Cable, Flat 10-Pin Type, 1m
965014	Digimatic Cable, Flat 10-Pin Type, 2m
06AFM380D	USB Input Tool Direct (Digimatic USB), Flat 10-Pin Type
02AZD880G	U-WAVE-T, Buzzer Type, Wireless Transmitter
02AZD730G	U-WAVE-T, IP67 Type, Wireless Transmitter
02AZD790D	U-WAVE-T Connection Cable D, Flat 10-Pin Type
21EAA130	Cable RS-232C for ID-H Indicator 1m
21EAA131	Cable RS-232C for ID-H Indicator 2m
21EZA099	Remote Controller, for ID-H Indicator
21JZA295	Spindle Lifting Cable, for Indicator, L=500mm
21EZA101	Spindle Lifting Knob, for ID-H Indicator

21JZA295 : moving measuring range max. 30 mm

Consumable spares

No.	Description
901312	Contact Element Ball Point, M2,5x0,45, 7,3mm Length, Carbide, Metric

*** RS-232 Input/Output**
Connect this instrument with an external device such as a PC using the RS-232 dedicated cable (optional accessory). With this connection it is possible to perform initial setup of the instrument, control of switching a measurement mode, etc., and processing such as measurement data transfer.

All products to be sold to commercial customers.
Product illustrations are without obligation. Product descriptions, in particular any and all technical specifications, are only binding when explicitly agreed upon.

ABSOLUTE Digimatic Indicators ID-F

Series 543

ABSOLUTE®

This is a superior multifunction indicator.
The ABSOLUTE Digimatic Indicator ID-F offers you the following benefits:

- 2-colour LCD backlight (green and red) provides you with visual GO/±NG tolerance judgement and analogue bar-graph display.
- You can display the maximum, minimum or range (runout value) during measurement.
- External power supply via AC-Adapter.

Functions	Series 543
Digimatic data output	●
ON/OFF	●
MAX/MIN/RANGE	●
ABS / INC (INC ZERO)	●
PRESET	●
Analog bar resolution switchable	●
Selectable resolution	●
Function lock	●
GO/±NG judgement	●
Counting direction switchable	●

Specifications

Display	LCD character height 8,5 mm
Max. response speed	Unlimited
Alarm	Counting value composition error, overflow error, tolerance limit setting error
Stem Ø	8 mm
Contact point	Carbide ball, thread M 2,5 x 0,45 mm
Power supply	AC adapter 9V DC, 500mA

Standard accessories

No.	Description
06AGC585D	AC-Adapter, 9V 500mA, CEE Type, Germany (Europe)
137693	Spindle Lifting Handle for Indicator, for Plunger

Optional accessories

No.	Description
936937	Digimatic Cable, Flat 10-Pin Type, 1m
965014	Digimatic Cable, Flat 10-Pin Type, 2m
06AFM380D	USB Input Tool Direct (Digimatic USB), Flat 10-Pin Type
02AZD880G	U-WAVE-T, Buzzer Type, Wireless Transmitter
02AZD730G	U-WAVE-T, IP67 Type, Wireless Transmitter
02AZD790D	U-WAVE-T Connection Cable D, Flat 10-Pin Type
21JZA295	Spindle Lifting Cable, for Indicator, L=500mm
02ACA571	Auxiliary Spindle Spring, for 25,4mm Range
02ACA773	Auxiliary Spindle Spring, for 50mm Range

21JZA295 : moving measuring range max. 25,4mm
02ACA571 and 02ACA773 : required when orienting the indicator upside down

For USB Input Tool Direct cable:
a footswitch (no. 937179T), a footswitch adapter (no. 06ADV384) and USB-ITPAK Software (no. 06AFM386) are required.

Consumable spares

No.	Description
901312	Contact Element Ball Point, M2,5x0,45, 7,3mm Length, Carbide, Metric

543-551D

543-553D

Visual tolerance-monitoring

Metric

No.	Range	Digital step	Max. Permissible Error E MPE	H MPE (Hysteresis)	R MPE (Repeatability)	Measuring force [N]	Protection	Mass [g]
543-551D	25,4 mm	0,001/0,01 mm	0,003 mm	0,002 mm	0,002 mm	≤1,8	IP30	240
543-557D	50,8 mm	0,001/0,01 mm	0,003 mm	0,002 mm	0,002 mm	≤2,3	IP30	330
543-553D	50,8 mm	0,001/0,01 mm	0,006 mm	0,002 mm	0,002 mm	≤2,3	IP30	330

All products to be sold to commercial customers.
Product illustrations are without obligation. Product descriptions, in particular any and all technical specifications, are only binding when explicitly agreed upon.

Mitutoyo

ABSOLUTE Digimatic Indicators ID-F

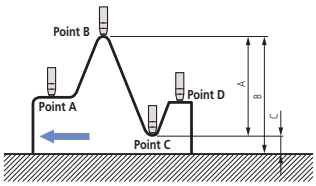

Difference/Runout measurement
Example : indicator travel from points A to D.
Difference (or Total Runout) is displayed as A. Dimensions B (maximum value) and C (minimum value) can be measured with a simple key sequence.

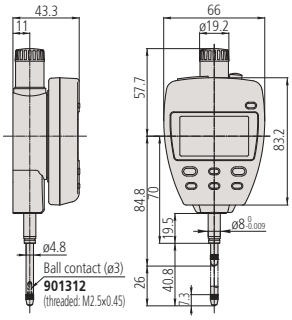

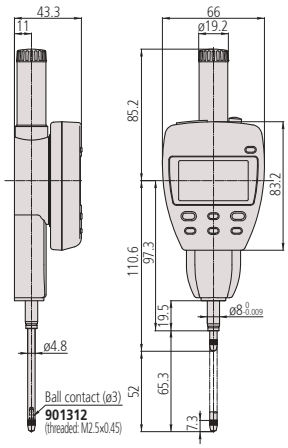

Metric Dial Indicators Series 1

Series 1

Compact Type, Extra Small Diameter - Metric

This is a compact, dial indicator with a bezel Ø 31 / 36 mm. It offers you the following benefits:

- It is ideal for use in applications where space is limited.

1003A(B)

1911A(B)-10

1913A(B)-10

Functions	Series 1	
	1003A up to 1911AB-10	1913A-10 1913AB-10
Balanced dial	●	●
Jeweled bearing		●

Consumable spares

No.	Description
21AZA319	Contact Element Ball Point, M2,5x0,45, 8,3mm Length, Metric

For accessories and contact points, see end of dial indicators section.

All products to be sold to commercial customers.
Product illustrations are without obligation. Product descriptions, in particular any and all technical specifications, are only binding when explicitly agreed upon.

Metric Dial Indicators Series 1

Metric

No.	Range	Range per rev.	Graduation [mm]	Scale	MPE any 1/10 revolution [µm]	MPE any 1/2 revolution [µm]	MPE any 1 revolution [µm]	MPE measuring range [µm]	H MPE (Hysteresis) [µm]	R MPE (Repeatability) [µm]
1003A	4 mm	1 mm	0,01	0-50-0	6	9	10	14	3,5	3
1003AB	4 mm	1 mm	0,01	0-50-0	6	9	10	14	3,5	3
1911A-10	2,5 mm	1 mm	0,01	0-50-0	6,5	10	11	13	3,5	3
1911AB-10	2,5 mm	1 mm	0,01	0-50-0	6,5	10	11	13	3,5	3
1913A-10	0,5 mm	0,2 mm	0,002	0-100-0	2,5	4,5	5	6	2,5	1
1913AB-10	0,5 mm	0,2 mm	0,002	0-100-0	2,5	4,5	5	6	2,5	1

B-type delivered with flat back plate

No.	Measuring force [N]	Mass [g]	A [mm]	B [mm]	C [mm]	D [mm]	E [mm]	F [mm]	G [mm]	H [mm]	I [mm]
1003A	0,3-1,4	51	18	40,3	36	13,9	15	9,5	12,8	32	6
1003AB	0,3-1,4	48	18	40,3	36	13,9	15	9,5	12,8	32	6
1911A-10	0,3-1,8	55	15,5	42	31	13,2	19,4	15,1	11,5	30	6
1911AB-10	0,3-1,8	51	15,5	42	31	13,2	19,4	15,1	11,5	30	6
1913A-10	0,3-1,8	55	15,5	39,4	31	13,2	19,4	15,1	8,9	30	6
1913AB-10	0,3-1,8	51	15,5	39,4	31	13,2	19,4	15,1	8,9	30	6

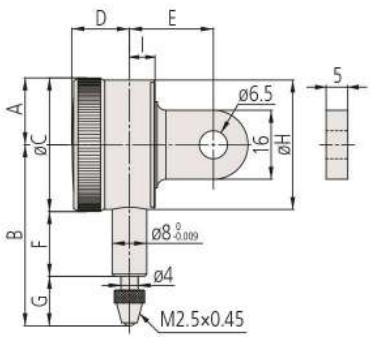

1911A(B)-10
1913A(B)-10

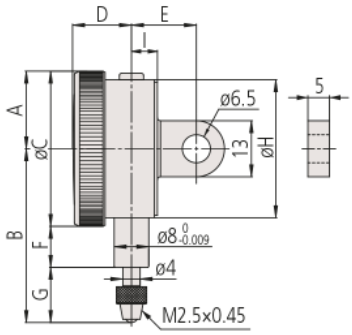

1003A(B)

All products to be sold to commercial customers.
Product illustrations are without obligation. Product descriptions, in particular any and all technical specifications, are only binding when explicitly agreed upon.

Mitutoyo

Metric Dial Indicators Series 1

Series 1

Compact Type 1 and 3,5 mm Range Small Diameter - Metric

This is a compact, dial indicator with a bezel Ø 40 mm. It offers you the following benefits:

- It is ideal for use in applications where space is limited.

1109A(B)-10

1013A(B)-10

1124A(B)

1040AB

Functions	1013A-10 up to 1109AB-10	1041A 1041AB	1040A 1040AB	1124A 1124AB
Balanced dial	●	●		
Continuous dial			●	●
Double scale spacing		●	●	
Shock-proof	●			
Jeweled bearing	●			

Optional accessories

No.	Description
21AAB363	Limit Hands (Green) 2 pcs., Dial Indicator Series 1, Test Indicator
21RZA149	Bezel Clamp for Dial Gauge, Series 1
902100	Spindle Lifting Lever, for S-Type and A-Type Series 1
21JZA295	Spindle Lifting Cable, for Indicator, L=500mm
21JZA301	Spindle Lifting Cable with Auto Stop, for Indicator, L=300mm

Consumable spares

No.	Description
901312	Contact Element Ball Point, M2,5x0,45, 7,3mm Length, Carbide, Metric

For accessories and contact points, see end of dial indicators section.

Metric

No.	Range	Range per rev.	Graduation [mm]	Scale	MPE any 1/10 revolution [µm]	MPE any 1/2 revolution [µm]	MPE any 1 revolution [µm]	MPE measuring range [µm]	H MPE (Hysteresis) [µm]	R MPE (Repeatability) [µm]
1109A-10	1 mm	0,2 mm	0,001	0-100-0	2,5	4	4,5	5	2	1
1109AB-10	1 mm	0,2 mm	0,001	0-100-0	2,5	4	4,5	5	2	1
1013A-10	1 mm	0,2 mm	0,002	0-100-0	2,5	4	4,5	6	2	1
1013AB-10	1 mm	0,2 mm	0,002	0-100-0	2,5	4	4,5	6	2	1
1124A	3,5 mm	0,5 mm	0,005	0-50 (50-0)	5	8	9	12	3	3
1124AB	3,5 mm	0,5 mm	0,005	0-50 (50-0)	5	8	9	12	3	3
1040A	3,5 mm	0,5 mm	0,01	0-50 (50-0)	5	8	9	12	3	3
1040AB	3,5 mm	0,5 mm	0,01	0-50 (50-0)	5	8	9	12	3	3
1041A	3,5 mm	0,5 mm	0,01	0-25-0	5	8	9	12	3	3
1041AB	3,5 mm	0,5 mm	0,01	0-25-0	5	8	9	12	3	3

B-type delivered with flat back plate

No.	Measuring force [N]	Mass [g]	A [mm]	B [mm]	C [mm]	D [mm]	E [mm]	F [mm]	G [mm]	H [mm]	I [mm]
1109A-10	0,4-1,5	95	32,5	49	40	15	20	13,8	15,2	38	6,6
1109AB-10	0,4-1,5	75	32,5	49	40	15	20	13,8	15,2	38	6,6
1013A-10	0,4-1,5	95	32,5	49	40	15	20	13,8	15,2	38	6,6
1013AB-10	0,4-1,5	75	32,5	49	40	15	20	13,8	15,2	38	6,6
1124A	0,4-1,4	90	32,5	46	40	15	20	13,8	12,2	38	6,6
1124AB	0,4-1,4	70	32,5	46	40	15	20	13,8	12,2	38	6,6
1040A	0,4-1,4	90	32,5	46	40	15	20	13,8	12,2	38	6,6
1040AB	0,4-1,4	70	32,5	46	40	15	20	13,8	12,2	38	6,6
1041A	0,4-1,4	90	32,5	46	40	15	20	13,8	12,2	38	6,6
1041AB	0,4-1,4	70	32,5	46	40	15	20	13,8	12,2	38	6,6

1041AB

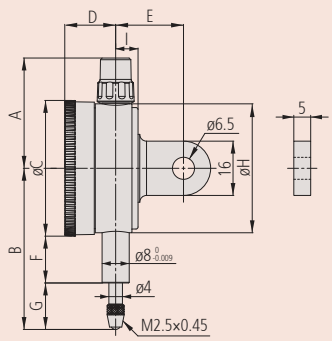

All products to be sold to commercial customers.
Product illustrations are without obligation. Product descriptions, in particular any and all technical specifications, are only binding when explicitly agreed upon.

Metric Dial Indicators Series 1

Series 1

Compact Type 5 mm Range Small Diameter - Metric

IP63

1044A(B)-60

This is a compact, dial indicator with a bezel Ø 40 mm. It offers you the following benefits:

- It is ideal for use in applications where space is limited.

Functions	Series 1			
	1044A 1044AB	1044A-60 1044AB-60	1044A-15 1044AB-15	1045A 1045AB
Balanced dial				●
Continuous dial	●	●	●	
Jeweled bearing			●	
IP63		●		

Optional accessories

No.	Description
21AAB363	Limit Hands (Green) 2 pcs., Dial Indicator Series 1, Test Indicator
21RZA149	Bezel Clamp for Dial Gauge, Series 1
902100	Spindle Lifting Lever, for S-Type and A-Type Series 1
21JZA295	Spindle Lifting Cable, for Indicator, L=500mm
21JZA301	Spindle Lifting Cable with Auto Stop, for Indicator, L=300mm

Consumable spares

No.	Description
901312	Contact Element Ball Point, M2,5x0,45, 7,3mm Length, Carbide, Metric
21AAB562	NBR Rubber Boot, Digital Gauge ID-B, Dial Gauge IP63/IP64

21AAB562: for 1044A(B)-60 (IP model)

21JZA295 and 21JZA301: not for IP63 type

For accessories and contact points, see end of dial indicators section.

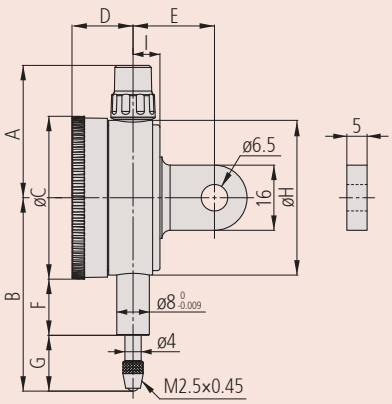

1044A(B)
1044A(B)-15

1044A(B)-60
IP63

1045A(B)

Metric

No.	Range	Range per rev.	Graduation [mm]	Scale	MPE any 1/10 revolution [µm]	MPE any 1/2 revolution [µm]	MPE any 1 revolution [µm]	MPE measuring range [µm]	H MPE (Hysteresis) [µm]	R MPE (Repeatability) [µm]
1044A	5 mm	1 mm	0,01	0-100 (100-0)	5	9	10	12	3	3
1044AB	5 mm	1 mm	0,01	0-100 (100-0)	5	9	10	12	3	3
1044A-15	5 mm	1 mm	0,01	0-100 (100-0)	5	9	10	12	3	3
1044AB-15	5 mm	1 mm	0,01	0-100 (100-0)	5	9	10	12	3	3
1044A-60	5 mm	1 mm	0,01	0-100 (100-0)	5	9	10	12	3	3
1044AB-60	5 mm	1 mm	0,01	0-100 (100-0)	5	9	10	12	3	3
1045A	5 mm	1mm	0,01	0-50-0	5	9	10	12	3	3
1045AB	5 mm	1 mm	0,01	0-50-0	5	9	10	12	3	3

1044A(B)-15: Low measuring force model. Use in vertical position only (contact point downward)

B-type delivered with flat back plate

No.	Measuring force [N]	Mass [g]	A [mm]	B [mm]	C [mm]	D [mm]	E [mm]	F [mm]	G [mm]	H [mm]	I [mm]
1044A	0,4-1,4	90	32,5	47,5	40	15	20	13,8	13,7	38	6,6
1044AB	0,4-1,4	70	32,5	47,5	40	15	20	13,8	13,7	38	6,6
1044A-15	0,1-0,4	90	32,5	47,5	40	15	20	13,8	13,7	38	6,6
1044AB-15	0,1-0,4	70	32,5	47,5	40	15	20	13,8	13,7	38	6,6
1044A-60	0,4-2	90	32,5	57	40	15	20	12,2	24,8	38	6,6
1044AB-60	0,4-2	70	32,5	57	40	15	20	12,2	24,8	38	6,6
1045A	0,4-1,4	90	32,5	47,5	40	15	20	13,8	13,7	38	6,6
1045AB	0,4-1,4	70	32,5	47,5	40	15	20	13,8	13,7	38	6,6

All products to be sold to commercial customers.
Product illustrations are without obligation. Product descriptions, in particular any and all technical specifications, are only binding when explicitly agreed upon.

Mitutoyo

One Revolution Dial Indicators Series 1

Series 1

This is a compact, metric dial indicator. It offers you the following benefits:

- It eliminates the possibility of reading errors due to miscounting multiple revolutions.

IP52
1900A(B)-72
1929A(B)-62

1929A(B)
1929A(B)-62

1900A(B)-10
1900A(B)-72

Functions	Series 1			
	1900A-10 1900AB-10	1900A-72 1900AB-72	1929A 1929AB	1929A-62 1929AB-62
Balanced dial	●	●	●	●
One revolution	●	●	●	●
Shockproof	●	●	●	●
Jeweled bearing	●	●		
IP52		●		●

Optional accessories

No.	Description
21AAB363	Limit Hands (Green) 2 pcs., Dial Indicator Series 1, Test Indicator
21RZA149	Bezel Clamp for Dial Gauge, Series 1
902100	Spindle Lifting Lever, for S-Type and A-Type Series 1
21JZA295	Spindle Lifting Cable, for Indicator, L=500mm
21JZA301	Spindle Lifting Cable with Auto Stop, for Indicator, L=300mm

Consumable spares

No.	Description
901312	Contact Element Ball Point, M2,5x0,45, 7,3mm Length, Carbide, Metric

For accessories and contact points, see end of dial indicators section.

Metric

No.	Range	Range per rev.	Graduation [mm]	Scale	MPE any 1/10 revolution [µm]	MPE measuring range [µm]	H MPE (Hysteresis) [µm]	R MPE (Repeatability) [µm]
1900A-10	0,1 mm (plunger stroke: 2mm)	0,14 mm	0,001	50-0-50	2	4	2	1
1900AB-10	0,1 mm (plunger stroke: 2mm)	0,14 mm	0,001	50-0-50	2	4	2	1
1900A-72	0,1 mm (plunger stroke: 2mm)	0,14 mm	0,001	50-0-50	2	4	2	1
1900AB-72	0,1 mm (plunger stroke: 2mm)	0,14 mm	0,001	50-0-50	2	4	2	1
1929A	1 mm (plunger stroke: 3,5mm)	1,4 mm	0,01	50-0-50	5	9	3	3
1929AB	1 mm (plunger stroke: 3,5mm)	1,4 mm	0,01	50-0-50	5	9	3	3
1929A-62	1 mm (plunger stroke: 3,5mm)	1,4 mm	0,01	50-0-50	5	9	3	3
1929AB-62	1 mm (plunger stroke: 3,5mm)	1,4 mm	0,01	50-0-50	5	9	3	3

B-type delivered with flat back plate

No.	Measuring force [N]	Mass [g]	A [mm]	B [mm]	C [mm]	D [mm]	E [mm]	F [mm]	G [mm]	H [mm]	I [mm]
1900A-10	0,4-1,5	95	32,5	53,5	40	15	20	16,8	16,7	38	6,6
1900AB-10	0,4-1,5	75	32,5	53,5	40	15	20	16,8	16,7	38	6,6
1900A-72	0,4-1,5	95	32,5	53,5	40	15	20	16,8	16,7	38	6,6
1900AB-72	0,4-1,5	75	32,5	53,5	40	15	20	16,8	16,7	38	6,6
1929A	0,4-1,4	90	32,5	47,5	40	15	20	13,8	13,7	38	6,6
1929AB	0,4-1,4	70	32,5	47,5	40	15	20	13,8	13,7	38	6,6
1929A-62	0,4-1,4	90	32,5	47,5	40	15	20	13,8	13,7	38	6,6
1929AB-62	0,4-1,4	70	32,5	47,5	40	15	20	13,8	13,7	38	6,6

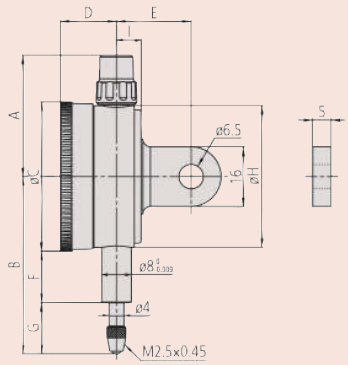

All products to be sold to commercial customers.
Product illustrations are without obligation. Product descriptions, in particular any and all technical specifications, are only binding when explicitly agreed upon.

Metric Dial Indicators Series 2

Series 2

Standard Type, 5 mm Range, 0,01 mm Graduation

2044A(B)-60

This is a standard dial indicator. It offers you the following benefits:

- Bezel clamp and lifting lever (optional) can be attached to either right or left side. They can be easily installed and removed without tools.
- No through screw holes on the frame and secure adhesion between the bezel and the crystal as well as the use of an O-ring prevents water or oil penetration.

Functions	Series 2			
	2044A 2044AB	2044A-60 2044AB-60	2044A-09 2044AB-09	2045A 2045AB
Balanced dial				●
Continuous dial	●	●	●	
Shockproof			●	
IP64		●		

Optional accessories

No.	Description
21AZB195	Limit Hands (green) 2pcs, Dial Indicator Series 2/3/4
21AZB148	Bezel Clamp for Dial Gauge, Metric, Series 2/3/4
21EZA198	Spindle Lifting Lever, for Digital Indicator, A-Type Dial Indicator Series 2/3/4
21JZA295	Spindle Lifting Cable, for Indicator, L=500mm
21JZA301	Spindle Lifting Cable with Auto Stop, for Indicator, L=300mm

Consumable spares

No.	Description
901312	Contact Element Ball Point, M2,5x0,45, 7,3mm Length, Carbide, Metric
21AAB562	NBR Rubber Boot, Digital Gauge ID-B, Dial Gauge IP63/IP64

21AAB562: for 2044A(B)-60 (IP model)

21JZA295 and 21JZA301: not for IP64 type

For accessories and contact points, see end of dial indicators section.

2044A(B)
2044A(B)-09

2044A(B)-60

2045A(B)

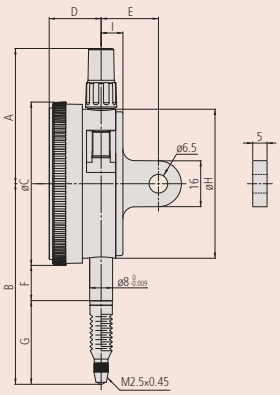

2044A(B)-60

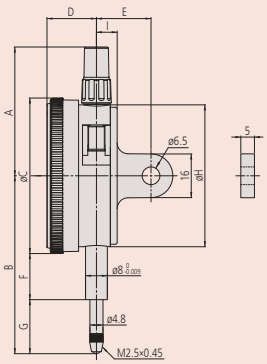

Metric

No.	Range	Range per rev.	Graduation [mm]	Scale	MPE any 1/10 revolution [µm]	MPE any 1/2 revolution [µm]	MPE any 1 revolution [µm]	MPE measuring range [µm]	H MPE (Hysteresis) [µm]	R MPE (Repeatability) [µm]
2044A	5 mm	1 mm	0,01	0-100 (100-0)	5	9	10	12	3	3
2044AB	5 mm	1 mm	0,01	0-100 (100-0)	5	9	10	12	3	3
2044A-09	5 mm	1 mm	0,01	0-100 (100-0)	5	9	10	12	3	3
2044AB-09	5 mm	1 mm	0,01	0-100 (100-0)	5	9	10	12	3	3
2044A-60	5 mm	1 mm	0,01	0-100 (100-0)	5	9	10	12	3	3
2044AB-60	5 mm	1 mm	0,01	0-100 (100-0)	5	9	10	12	3	3
2045A	5 mm	1 mm	0,01	0-50-0	5	9	10	12	3	3
2045AB	5 mm	1 mm	0,01	0-50-0	5	9	10	12	3	3

B-type delivered with flat back plate

No.	Measuring force [N]	Mass [g]	A [mm]	B [mm]	C [mm]	D [mm]	E [mm]	F [mm]	G [mm]	H [mm]	I [mm]
2044A	0,4-1,4	145	47,2	65,2	57	18,1	20	16,9	19,8	52	7,6
2044AB	0,4-1,4	136	47,2	65,2	57	18,1	20	16,9	19,8	52	7,6
2044A-09	0,4-1,4	147	47,2	65,2	57	18,1	20	16,9	19,8	52	7,6
2044AB-09	0,4-1,4	138	47,2	65,2	57	18,1	20	16,9	19,8	52	7,6
2044A-60	0,4-2,5	147	47,2	70	57	18,1	20	12,3	29,2	52	7,6
2044AB-60	0,4-2,5	138	47,2	70	57	18,1	20	12,3	29,2	52	7,6
2045A	0,4-1,4	145	47,2	65,2	57	18,1	20	16,9	19,8	52	7,6
2045AB	0,4-1,4	136	47,2	65,2	57	18,1	20	16,9	19,8	52	7,6

All products to be sold to commercial customers.
Product illustrations are without obligation. Product descriptions, in particular any and all technical specifications, are only binding when explicitly agreed upon.

Metric Dial Indicators Series 2

Series 2

Standard Type, 10 mm Range, 0,01 mm Graduation

2046A(B)-60

This is a standard dial indicator. It offers you the following benefits:

- Bezel clamp and lifting lever (optional) can be attached to either right or left side. They can be easily installed and removed without tools.
- No through screw holes on the frame as well as the use of an O-ring prevents water or oil penetration.

2046A(B)
2046A(B)-09

2046A(B)-60

2310A(B)-10

2902A(B)

Metric

No.	Range	Range per rev.	Graduation [mm]	Scale	MPE any 1/10 revolution [µm]	MPE any 1/2 revolution [µm]	MPE any 1 revolution [µm]	MPE measuring range [µm]	H MPE (Hysteresis) [µm]	R MPE (Repeatability) [µm]
2046A	10 mm	1 mm	0,01	0-100 (100-0)	5	9	10	13	3	3
2046AB	10 mm	1 mm	0,01	0-100 (100-0)	5	9	10	13	3	3
2046A-09	10 mm	1 mm	0,01	0-100 (100-0)	5	9	10	15	3	3
2046AB-09	10 mm	1 mm	0,01	0-100 (100-0)	5	9	10	15	3	3
2046A-60	10 mm	1 mm	0,01	0-100 (100-0)	5	9	10	13	3	3
2046AB-60	10 mm	1 mm	0,01	0-100 (100-0)	5	9	10	13	3	3
2310A-10	10 mm	1 mm	0,01	0-100 (100-0)	5	9	10	15	3	3
2310AB-10	10 mm	1 mm	0,01	0-100 (100-0)	5	9	10	15	3	3
2902A	10 mm	1 mm	0,01	100-0	5	9	10	13	3	3
2902AB	10 mm	1 mm	0,01	100-0	5	9	10	13	3	3
2047A	10 mm	1 mm	0,01	0-50-0	5	9	10	13	3	3
2047AB	10 mm	1 mm	0,01	0-50-0	5	9	10	13	3	3

B-type delivered with flat back plate

No.	Measuring force [N]	Mass [g]	A [mm]	B [mm]	C [mm]	D [mm]	E [mm]	F [mm]	G [mm]	H [mm]	I [mm]
2046A	0,4-1,4	144	47,2	65,2	57	18,1	20	16,9	19,8	52	7,6
2046AB	0,4-1,4	135	47,2	65,2	57	18,1	20	16,9	19,8	52	7,6
2046A-09	0,4-1,4	146	47,2	65,2	57	18,1	20	16,9	19,8	52	7,6
2046AB-09	0,4-1,4	137	47,2	65,2	57	18,1	20	16,9	19,8	52	7,6
2046A-60	0,4-2,5	146	47,2	74,7	57	18,1	20	12,3	33,9	52	7,6
2046AB-60	0,4-2,5	137	47,2	74,7	57	18,1	20	12,3	33,9	52	7,6
2310A-10	0,4-1,4	146	47,2	65,2	57	18,1	20	16,9	19,8	52	7,6
2310AB-10	0,4-1,4	137	47,2	65,2	57	18,1	20	16,9	19,8	52	7,6
2902A	0,4-1,4	144	47,2	65,2	57	18,1	20	16,9	19,8	52	7,6
2902AB	0,4-1,4	135	47,2	65,2	57	18,1	20	16,9	19,8	52	7,6
2047A	0,4-1,4	144	47,2	65,2	57	18,1	20	16,9	19,8	52	7,6
2047AB	0,4-1,4	135	47,2	65,2	57	18,1	20	16,9	19,8	52	7,6

Functions	Series 2					
	2046A 2046AB	2046A-60 2046AB-60	2046A-09 2046AB-09	2310A-10 2310AB-10	2902A 2902AB	2047A 2047AB
Balanced dial						●
Continuous dial	●	●	●	●	●	
Reverse reading					●	
Coaxial revolution counter				●		
Shockproof			●			
Jeweled bearing				●		
IP64		●				

Optional accessories

No.	Description
21AZB195	Limit Hands (green) 2pcs, Dial Indicator Series 2/3/4
21AZB148	Bezel Clamp for Dial Gauge, Metric, Series 2/3/4
21EZA198	Spindle Lifting Lever, for Digital Indicator, A-Type Dial Indicator Series 2/3/4
21JZA295	Spindle Lifting Cable, for Indicator, L=500mm
21JZA301	Spindle Lifting Cable with Auto Stop, for Indicator, L=300mm

Consumable spares

No.	Description
901312	Contact Element Ball Point, M2,5x0,45, 7,3mm Length, Carbide, Metric
21AAB562	NBR Rubber Boot, Digital Gauge ID-B, Dial Gauge IP63/IP64

21AAB562: for 2046A(B)-60 (IP model)

21JZA295 and 21JZA301: not for IP64 type

For accessories and contact points, see end of dial indicators section.

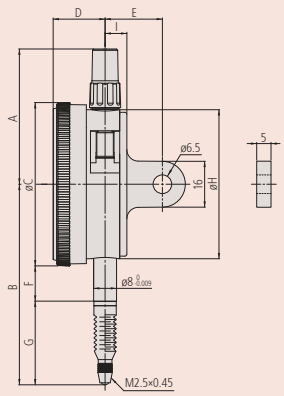

2046A(B)-60

All products to be sold to commercial customers.
Product illustrations are without obligation. Product descriptions, in particular any and all technical specifications, are only binding when explicitly agreed upon.

Metric Dial Indicators Series 2

Series 2

Standard Type, 1 mm Range, 0,001 mm Graduation

2109A(B)-70
2110A(B)-70

This is a standard dial indicator. It offers you the following benefits:

- Bezel clamp and lifting lever (optional) can be attached to either right or left side. They can be easily installed and removed without tools.
- No through screw holes on the frame and secure adhesion between the bezel and the crystal as well as the use of an O-ring prevents water or oil penetration.

Functions	Series 2			
	2109A-10 2109AB-10	2109A-70 2109AB-70	2110A-10 2110AB-10	2110A-70 2110AB-70
Balanced dial	●	●		
Continuous dial			●	●
Double scale spacing			●	●
Shockproof	●	●	●	●
Jeweled bearing	●	●	●	●
IP64		●		●

Optional accessories

No.	Description
21AZB195	Limit Hands (green) 2pcs, Dial Indicator Series 2/3/4
21AZB148	Bezel Clamp for Dial Gauge, Metric, Series 2/3/4
21EZA198	Spindle Lifting Lever, for Digital Indicator, A-Type Dial Indicator Series 2/3/4
21JZA295	Spindle Lifting Cable, for Indicator, L=500mm
21JZA301	Spindle Lifting Cable with Auto Stop, for Indicator, L=300mm

Consumable spares

No.	Description
901312	Contact Element Ball Point, M2,5x0,45, 7,3mm Length, Carbide, Metric
21AAB562	NBR Rubber Boot, Digital Gauge ID-B, Dial Gauge IP63/IP64
21AAB563	NBR Rubber Boot, Dial Gauge IP64

21AAB562: for 2110A(B)-70
21AAB563: for 2109A(B)-70

21JZA295 and 21JZA301: not for IP64 type

For accessories and contact points, see end of dial indicators section.

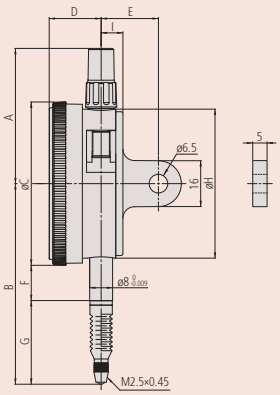

2109A(B)-70

2110A(B)-10

2110A(B)-70

2109A(B)-10

2109A(B)-70

Metric

No.	Range	Range per rev.	Graduation [mm]	Scale
2110A-10	1 mm	0,1 mm	0,001	0-100 (100-0)
2110AB-10	1 mm	0,1 mm	0,001	0-100 (100-0)
2110A-70	1 mm	0,1 mm	0,001	0-100 (100-0)
2110AB-70	1 mm	0,1 mm	0,001	0-100 (100-0)
2109A-10	1 mm	0,2 mm	0,001	0-100-0
2109AB-10	1 mm	0,2 mm	0,001	0-100-0
2109A-70	1 mm	0,2 mm	0,001	0-100-0
2109AB-70	1 mm	0,2 mm	0,001	0-100-0

B-type delivered with flat back plate

No.	MPE any 1/10 revolution [µm]	MPE any 1/2 revolution [µm]	MPE any 1 revolution [µm]	MPE measuring range [µm]	H MPE (Hysteresis) [µm]	R MPE (Repeatability) [µm]
2110A-10	2,5	4	4,5	5	2	1
2110AB-10	2,5	4	4,5	5	2	1
2110A-70	2,5	4	4,5	5	2	1
2110AB-70	2,5	4	4,5	5	2	1
2109A-10	2,5	4	4,5	5	2	1
2109AB-10	2,5	4	4,5	5	2	1
2109A-70	2,5	4	4,5	5	2	1
2109AB-70	2,5	4	4,5	5	2	1

No.	Measuring force [N]	Mass [g]	A [mm]	B [mm]	C [mm]	D [mm]	E [mm]	F [mm]	G [mm]	H [mm]	I [mm]
2110A-10	0,4-1,8	149	47,2	66,5	57	18,1	20	16,9	21,1	52	7,6
2110AB-10	0,4-1,8	140	47,2	66,5	57	18,1	20	16,9	21,1	52	7,6
2110A-70	0,4-2	150	47,2	67,5	57	18,1	20	12,3	26,7	52	7,6
2110AB-70	0,4-2	141	47,2	67,5	57	18,1	20	12,3	26,7	52	7,6
2109A-10	0,4-1,5	148	47,2	60,5	57	18,1	20	16,9	15,1	52	7,6
2109AB-10	0,4-1,5	139	47,2	60,5	57	18,1	20	16,9	15,1	52	7,6
2109A-70	0,4-2	149	47,2	65,3	57	18,1	20	12,3	24,5	52	7,6
2109AB-70	0,4-2	140	47,2	65,3	57	18,1	20	12,3	24,5	52	7,6

All products to be sold to commercial customers.
Product illustrations are without obligation. Product descriptions, in particular any and all technical specifications, are only binding when explicitly agreed upon.

Mitutoyo

Metric Dial Indicators Series 2

Series 2

Standard Type, 2 and 5 mm Range, 0,001 / 0,005 mm Graduation

This is a standard dial indicator. It offers you the following benefits:

- Bezel clamp and lifting lever (optional) can be attached to either right or left side. They can be easily installed and removed without tools.
- No through screw holes on the frame and secure adhesion between the bezel and the crystal as well as the use of an O-ring prevents water or oil penetration.

2113A(B)-10

2118A(B)-10

2119A(B)-10

2124A(B)-10

Metric

No.	Range	Range per rev.	Graduation [mm]	Scale
2113A-10	2 mm	0,2 mm	0,001	0-100-0
2113AB-10	2 mm	0,2 mm	0,001	0-100-0
2118A-10	5 mm	0,2 mm	0,001	0-100-100
2118AB-10	5 mm	0,2 mm	0,001	0-100-100
2119A-10	5 mm	0,2 mm	0,001	0-100-0
2119AB-10	5 mm	0,2 mm	0,001	0-100-0
2124A-10	5 mm	0,5 mm	0,005	0-50 (50-0)
2124AB-10	5 mm	0,5 mm	0,005	0-50 (50-0)

B-type delivered with flat back plate

No.	MPE any 1/10 revolution [µm]	MPE any 1/2 revolution [µm]	MPE any 1 revolution [µm]	MPE measuring range [µm]	H MPE (Hysteresis) [µm]	R MPE (Repeatability) [µm]
2113A-10	2,5	4	4,5	7	2	1
2113AB-10	2,5	4	4,5	7	2	1
2118A-10	4	6	6,5	10	2,5	1,5
2118AB-10	4	6	6,5	10	2,5	1,5
2119A-10	4	6	6,5	10	2,5	1,5
2119AB-10	4	6	6,5	10	2,5	1,5
2124A-10	5	9	10	11	3	2
2124AB-10	5	9	10	11	3	2

No.	Measuring force [N]	Mass [g]	A [mm]	B [mm]	C [mm]	D [mm]	E [mm]	F [mm]	G [mm]	H [mm]	I [mm]
2113A-10	0,4-1,5	148	47,2	61	57	18,1	20	16,9	15,6	52	7,6
2113AB-10	0,4-1,5	139	47,2	61	57	18,1	20	16,9	15,6	52	7,6
2118A-10	0,4-1,5	146	47,2	60,3	57	18,1	20	16,9	14,9	52	7,6
2118AB-10	0,4-1,5	137	47,2	60,3	57	18,1	20	16,9	14,9	52	7,6
2119A-10	0,4-1,5	146	47,2	60,3	57	18,1	20	16,9	14,9	52	7,6
2119AB-10	0,4-1,5	137	47,2	60,3	57	18,1	20	16,9	14,9	52	7,6
2124A-10	0,4-1,5	146	47,2	60,3	57	18,1	20	16,9	14,9	52	7,6
2124AB-10	0,4-1,5	137	47,2	60,3	57	18,1	20	16,9	14,9	52	7,6

Functions	Series 2		
	2113A-10 2113AB-10	2119A-10 2119AB-10	2118A-10 up to 2124AB-10
Balanced dial	●	●	
Continuous dial			●
Shockproof	●		
Jeweled bearing	●	●	●

Optional accessories

No.	Description
21AZB195	Limit Hands (green) 2pcs, Dial Indicator Series 2/3/4
21AZB148	Bezel Clamp for Dial Gauge, Metric, Series 2/3/4
21EZA198	Spindle Lifting Lever, for Digital Indicator, A-Type Dial Indicator Series 2/3/4
21JZA295	Spindle Lifting Cable, for Indicator, L=500mm
21JZA301	Spindle Lifting Cable with Auto Stop, for Indicator, L=300mm

Consumable spares

No.	Description
901312	Contact Element Ball Point, M2,5x0,45, 7,3mm Length, Carbide, Metric

For accessories and contact points, see end of dial indicators section.

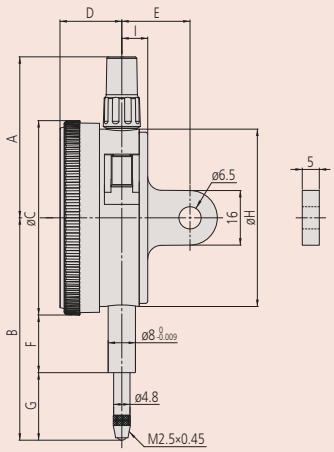

All products to be sold to commercial customers.
Product illustrations are without obligation. Product descriptions, in particular any and all technical specifications, are only binding when explicitly agreed upon.

Dial Indicators with 20 mm Stroke Series 2

Series 2

Standard Type, 20 mm Range, 0,01 mm Graduation

2050A(B)-60

This is a standard dial indicator. It offers you the following benefits:

- Bezel clamp and lifting lever (optional) can be attached to either right or left side. They can be easily installed and removed without tools.
- No through screw holes on the frame and secure adhesion between the bezel and the crystal as well as the use of an O-ring prevents water or oil penetration.

Functions	Series 2			
	2050A 2050AB	2050A-19 2050AB-19	2050A-60 2050AB-60	2320A-10 2320AB-10
Continuous dial	●	●	●	●
Coaxial revolution counter				●
Cushioned end point	●	●		●
Shockproof		●		
Jeweled bearing		●		●
IP64			●	

Optional accessories

No.	Description
21AZB195	Limit Hands (green) 2pcs, Dial Indicator Series 2/3/4
21AZB148	Bezel Clamp for Dial Gauge, Metric, Series 2/3/4

Consumable spares

No.	Description
901312	Contact Element Ball Point, M2,5x0,45, 7,3mm Length, Carbide, Metric
21AAB573	NBR Rubber Boot, Dial Gauge IP64, 20 mm Range

21AAB573: for 2050A(B)-60 (IP model)

For accessories and contact points, see end of dial indicators section.

2050A(B)
2050A(B)-19

2050A(B)-60

2320A(B)-10

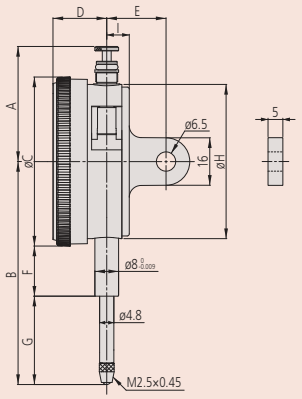

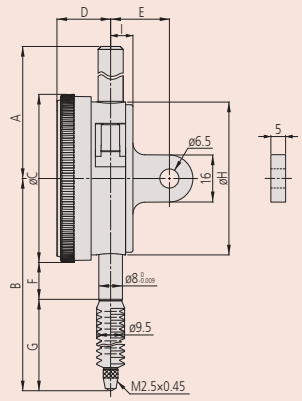

2050A(B)-60

Metric

No.	Range	Range per rev.	Graduation [mm]	Scale	MPE any 1/10 revolution [µm]	MPE any 1/2 revolution [µm]	MPE any 1 revolution [µm]	MPE measuring range [µm]	H MPE (Hysteresis) [µm]	R MPE (Repeatability) [µm]
2050A	20 mm	1 mm	0,01	0-100 (100-0)	6	10	11	20	4	3
2050AB	20 mm	1 mm	0,01	0-100 (100-0)	6	10	11	20	4	3
2050A-19	20 mm	1 mm	0,01	0-100 (100-0)	6	10	11	20	4	3
2050AB-19	20 mm	1 mm	0,01	0-100 (100-0)	6	10	11	20	4	3
2050A-60	20 mm	1 mm	0,01	0-100 (100-0)	6	10	11	20	4	3
2050AB-60	20 mm	1 mm	0,01	0-100 (100-0)	6	10	11	20	4	3
2320A-10	20 mm	1 mm	0,01	0-100 (100-0)	6	10	11	20	4	3
2320AB-10	20 mm	1 mm	0,01	0-100 (100-0)	6	10	11	20	4	3

B-type delivered with flat back plate

No.	Measuring force [N]	Mass [g]	A [mm]	B [mm]	C [mm]	D [mm]	E [mm]	F [mm]	G [mm]	H [mm]	I [mm]
2050A	0,4-2	149	38,8	75,2	57	18,1	20	16,9	29,8	52	7,6
2050AB	0,4-2	140	38,8	75,2	57	18,1	20	16,9	29,8	52	7,6
2050A-19	0,4-2	149	38,8	75,2	57	18,1	20	16,9	29,8	52	7,6
2050AB-19	0,4-2	140	38,8	75,2	57	18,1	20	16,9	29,8	52	7,6
2050A-60	0,4-2,5	155	58,2	87,2	57	18,1	20	12,3	31,1	52	7,6
2050AB-60	0,4-2,5	146	58,2	87,2	57	18,1	20	12,3	31,1	52	7,6
2320A-10	0,4-2	150	38,8	75,2	57	18,1	20	16,9	29,8	52	7,6
2320AB-10	0,4-2	141	38,8	75,2	57	18,1	20	16,9	29,8	52	7,6

All products to be sold to commercial customers.
Product illustrations are without obligation. Product descriptions, in particular any and all technical specifications, are only binding when explicitly agreed upon.

Mitutoyo

Dial Indicators with 30 mm Stroke Series 2

Series 2

Standard Type, 30 mm Range, 0,01 mm Graduation

This is a standard dial indicator. It offers you the following benefits:

- Bezel clamp and lifting lever (optional) can be attached to either right or left side. They can be easily installed and removed without tools.
- No through screw holes on the frame and secure adhesion between the bezel and the crystal as well as the use of an O-ring prevents water or oil penetration.

2052A(B)
2052A(B)-19

2330A(B)-10

2952A(B)

Functions	Series 2			
	2052A 2052AB	2052A-19 2052AB-19	2330A-10 2330AB-10	2952A 2952AB
Continuous dial	●	●	●	
Reverse reading				●
Coaxial revolution counter			●	
Cushioned end point	●	●	●	●
Shockproof		●		
Jeweled bearing		●	●	

Optional accessories

No.	Description
21AZB195	Limit Hands (green) 2pcs, Dial Indicator Series 2/3/4
21AZB148	Bezel Clamp for Dial Gauge, Metric, Series 2/3/4

Consumable spares

No.	Description
901312	Contact Element Ball Point, M2,5x0,45, 7,3mm Length, Carbide, Metric

For accessories and contact points, see end of dial indicators section.

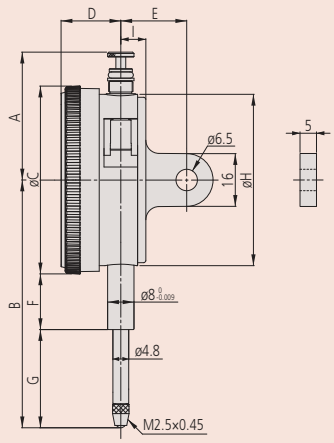

Metric

No.	Range	Range per rev.	Graduation [mm]	Scale	MPE any 1/10 revolution [µm]	MPE any 1/2 revolution [µm]	MPE any 1 revolution [µm]	MPE measuring range [µm]	H MPE (Hysteresis) [µm]	R MPE (Repeatability) [µm]
2052A	30 mm	1 mm	0,01	0-100 (100-0)	7	11	12	25	5	3
2052AB	30 mm	1 mm	0,01	0-100 (100-0)	7	11	12	25	5	3
2052A-19	30 mm	1 mm	0,01	0-100 (100-0)	7	11	12	25	5	3
2052AB-19	30 mm	1 mm	0,01	0-100 (100-0)	7	11	12	25	5	3
2330A-10	30 mm	1 mm	0,01	0-100 (100-0)	7	11	12	25	5	3
2330AB-10	30 mm	1 mm	0,01	0-100 (100-0)	7	11	12	25	5	3
2952A	30 mm	1 mm	0,01	100-0	7	11	12	25	5	3
2952AB	30 mm	1 mm	0,01	100-0	7	11	12	25	5	3

B-type delivered with flat back plate

No.	Measuring force [N]	Mass [g]	A [mm]	B [mm]	C [mm]	D [mm]	E [mm]	F [mm]	G [mm]	H [mm]	I [mm]
2052A	0,4-2,5	152	38,8	88,7	57	18,1	20	16,9	43,3	52	7,6
2052AB	0,4-2,5	143	38,8	88,7	57	18,1	20	16,9	43,3	52	7,6
2052A-19	0,4-2,5	152	38,8	88,7	57	18,1	20	16,9	43,3	52	7,6
2052AB-19	0,4-2,5	143	38,8	88,7	57	18,1	20	16,9	43,3	52	7,6
2330A-10	0,4-2,5	153	38,8	88,7	57	18,1	20	16,9	43,3	52	7,6
2330AB-10	0,4-2,5	144	38,8	88,7	57	18,1	20	16,9	43,3	52	7,6
2952A	0,4-2,5	152	38,8	88,7	57	18,1	20	16,9	43,3	52	7,6
2952AB	0,4-2,5	143	38,8	88,7	57	18,1	20	16,9	43,3	52	7,6

All products to be sold to commercial customers.
Product illustrations are without obligation. Product descriptions, in particular any and all technical specifications, are only binding when explicitly agreed upon.

Special Dial Indicators Series 2

Series 2

This special dial indicators offer you the following benefits:

- In an adjustable pointer type the pointer can be adjusted independently of the position of the spindle by rotating the top knob.
- In a peak hold type a mechanism holds the pointer and the spindle at the position of maximum depression and hence displays the maximum value.

Functions	Series 2 2046A-80 2046AB-80	Series 2 2048A-10 2048AB-10
Continuous dial	●	●
Coaxial revolution counter		●
Peak retaining	●	
Adjustable pointer		●
Jeweled bearing		●

Optional accessories

No.	Description
21AZB195	Limit Hands (green) 2pcs, Dial Indicator Series 2/3/4
21AZB148	Bezel Clamp for Dial Gauge, Metric, Series 2/3/4

Consumable spares

No.	Description
901312	Contact Element Ball Point, M2,5x0,45, 7,3mm Length, Carbide, Metric
21AZA319	Contact Element Ball Point, M2,5x0,45, 8,3mm Length, Metric

901312: for 2046A(B)-80
21AZA319: for 2048A(B)-10

For accessories and contact points, see end of dial indicators section.

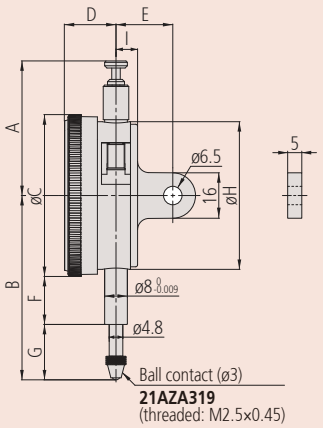

2048A(B)-10

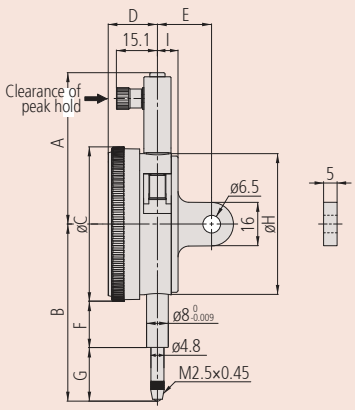

2046A(B)-80

2048A(B)-10

204A(B)-80

Metric

No.	Range	Range per rev.	Graduation [mm]	Scale	MPE any 1/10 revolution [µm]	MPE any 1/2 revolution [µm]	MPE any 1 revolution [µm]	MPE measuring range [µm]	H MPE (Hysteresis) [µm]	R MPE (Repeatability) [µm]
2048A-10	10 mm	1 mm	0,01	0-100 (100-0)	5	9	10	15	3	3
2048AB-10	10 mm	1 mm	0,01	0-100 (100-0)	5	9	10	15	3	3
2046A-80	10 mm	1 mm	0,01	0-100 (100-0)	5	9	10	15	3	3
2046AB-80	10 mm	1 mm	0,01	0-100 (100-0)	5	9	10	15	3	3

B-type delivered with flat back plate

No.	Measuring force [N]	Mass [g]
2048A-10	0,4-1,4	144
2048AB-10	0,4-1,4	135
2046A-80	0,4-5	158
2046AB-80	0,4-5	149

All products to be sold to commercial customers.
Product illustrations are without obligation. Product descriptions, in particular any and all technical specifications, are only binding when explicitly agreed upon.

One Revolution Dial Indicators Series 2

Series 2

Lightweight type

This is a one revolution dial indicator. It offers you the following benefits:

- Excellent water and drip-proof characteristics
- It eliminates the possibility of reading errors due to miscounting multiple revolutions.

2971AB

2972AB

2973AB

Functions	Series 2
One revolution	●
Cushioned end point	●
IP52	●

Optional accessories

No.	Description
21AZB195	Limit Hands (green) 2pcs, Dial Indicator Series 2/3/4
546666	Self-tapping Screw for Plastic, For Dial Gauge

Consumable spares

No.	Description
901312	Contact Element Ball Point, M2,5x0,45, 7,3mm Length, Carbide, Metric

For accessories and contact points, see end of dial indicators section.

Metric

No.	Range	Range per rev.	Graduation [mm]	Scale	MPE any 1/10 revolution [µm]	MPE measuring range [µm]	H MPE (Hysteresis) [µm]	R MPE (Repeatability) [µm]
2971AB	0,5 mm (plunger stroke: 3,5mm)	0,7 mm	0,01	25-0-25	5	7	3	3
2972AB	1 mm (plunger stroke: 3,5mm)	1,4 mm	0,01	50-0-50	5	7	3	3
2973AB	1,6 mm (plunger stroke: 3,5mm)	2 mm	0,02	80-0-80	8	16	4	5

No.	Measuring force [N]	Mass [g]	A [mm]	B [mm]	C [mm]	D [mm]	F [mm]	G [mm]	H [mm]	I [mm]
2971AB	0,4-1,4	70	43,2	65,6	57	16,9	20,3	16,8	55	7,6
2972AB	0,4-1,4	70	43,2	66	57	16,9	20,3	17,2	55	7,6
2973AB	0,4-1,4	75	43,2	66,3	57	16,9	20,3	17,5	55	7,6

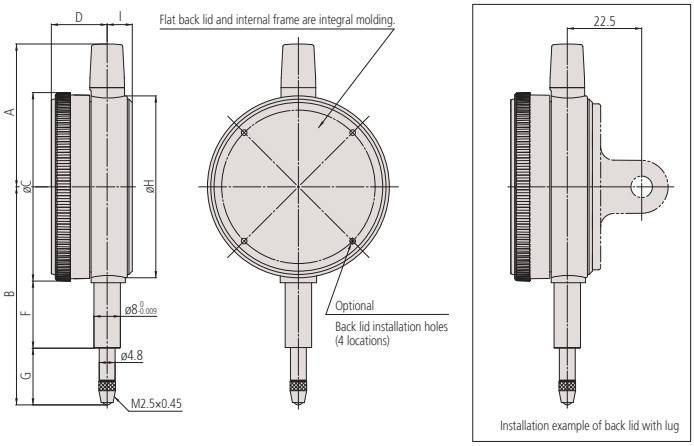

When installing an optional back, 4 retaining screws (no. 546666) must also be optained.

All products to be sold to commercial customers.
Product illustrations are without obligation. Product descriptions, in particular any and all technical specifications, are only binding when explicitly agreed upon.

One Revolution Dial Indicators Series 2

Series 2

Graduation 0,01 / 0,1 mm

IP52
2929A(B)-62
IP64
2929A(B)-60

This is a one revolution dial indicator. It offers you the following benefits:

- Bezel clamp and lifting lever (optional) can be attached to either right or left side. They can be easily installed without tools.
- No through screw holes on the frame and secure adhesion between the bezel and the crystal as well as the use of an O-ring prevents water or oil penetration.
- It eliminates the possibility of reading errors due to miscounting multiple revolutions.

Functions	Series 2		
	2928A up to 2959AB	2929A-60 2929AB-60	2929A-62 2929AB-62
One revolution	●	●	●
Shockproof	●	●	●
IP52			●
IP64		●	

2928A(B)

2929A(B)
2929A(B)-62

2929A(B)-60

Optional accessories

No.	Description
21AZB195	Limit Hands (green) 2pcs, Dial Indicator Series 2/3/4
21AZB148	Bezel Clamp for Dial Gauge, Metric, Series 2/3/4
21EZA198	Spindle Lifting Lever, for Digital Indicator, A-Type Dial Indicator Series 2/3/4
21JZA295	Spindle Lifting Cable, for Indicator, L=500mm
21JZA301	Spindle Lifting Cable with Auto Stop, for Indicator, L=300mm

Consumable spares

No.	Description
901312	Contact Element Ball Point, M2,5x0,45, 7,3mm Length, Carbide, Metric
21AAB562	NBR Rubber Boot, Digital Gauge ID-B, Dial Gauge IP63/IP64

21AAB562: for 2929A(B)-60 (IP model)

21JZA295 and 21JZA301: not for IP64 type

For accessories and contact points, see end of dial indicators section.

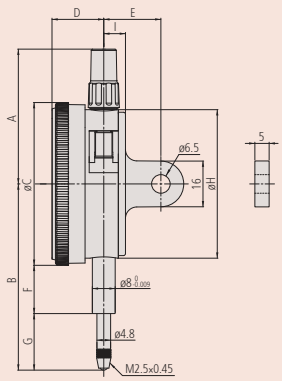

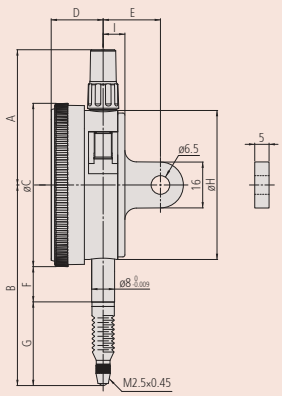

2929A(B)-60

Metric

No.	Range	Range per rev.	Graduation [mm]	Scale	MPE any 1/10 revolution [µm]	MPE measuring range [µm]	H MPE (Hysteresis) [µm]	R MPE (Repeatability) [µm]
2928A	4 mm (plunger stroke: 10mm)	5 mm	0,1	2,5-0-2,5	15	25	12	20
2928AB	4 mm (plunger stroke: 10mm)	5 mm	0,1	2,5-0-2,5	15	25	12	20
2929A	0,8 mm (plunger stroke: 5mm)	1 mm	0,01	50-0-50	5	7	3	3
2929AB	0,8 mm (plunger stroke: 5mm)	1 mm	0,01	50-0-50	5	7	3	3
2929A-62	0,8 mm (plunger stroke: 5mm)	1 mm	0,01	50-0-50	5	7	3	3
2929AB-62	0,8 mm (plunger stroke: 5mm)	1 mm	0,01	50-0-50	5	7	3	3
2929A-60	0,8 mm (plunger stroke: 5mm)	1 mm	0,01	50-0-50	5	7	3	3
2929AB-60	0,8 mm (plunger stroke: 5mm)	1 mm	0,01	50-0-50	5	7	3	3
2959A	1,6 mm (plunger stroke: 5mm)	2 mm	0,01	100-0-100	5	9	4	3
2959AB	1,6 mm (plunger stroke: 5mm)	2 mm	0,01	100-0-100	5	9	4	3

B-type delivered with flat back plate

No.	Measuring force [N]	Mass [g]	A [mm]	B [mm]	C [mm]	D [mm]	E [mm]	F [mm]	G [mm]	I [mm]
2928A	0,4-1,4	145	47,2	65,2	57	18,1	20	16,9	19,8	7,6
2928AB	0,4-1,4	136	47,2	65,2	57	18,1	20	16,9	19,8	7,6
2929A	0,4-1,4	145	47,2	65,2	57	18,1	20	16,9	19,8	7,6
2929AB	0,4-1,4	136	47,2	65,2	57	18,1	20	16,9	19,8	7,6
2929A-62	0,4-2	145	47,2	65,2	57	18,1	20	16,9	19,8	7,6
2929AB-62	0,4-2	136	47,2	65,2	57	18,1	20	16,9	19,8	7,6
2929A-60	0,4-2	146	47,2	70	57	18,1	20	12,3	29,2	7,6
2929AB-60	0,4-2	137	47,2	70	57	18,1	20	12,3	29,2	7,6
2959A	0,4-1,4	145	47,2	65,2	57	18,1	20	16,9	19,8	7,6
2959AB	0,4-1,4	136	47,2	65,2	57	18,1	20	16,9	19,8	7,6

All products to be sold to commercial customers.
Product illustrations are without obligation. Product descriptions, in particular any and all technical specifications, are only binding when explicitly agreed upon.

Mitutoyo

One Revolution Dial Indicators Series 2

Series 2

Graduation 0,001 mm

IP52
2900A(B)-72

IP64
2900A(B)-70

This is a one revolution dial indicator. It offers you the following benefits:

- Bezel clamp and lifting lever (optional) can be attached to either right or left side.
- No through screw holes on the frame as well as the use of an O-ring prevents water or oil penetration.
- It eliminates the possibility of reading errors due to miscounting multiple revolutions.

2900A(B)-10
2900A(B)-72

2900A(B)-70

2901A(B)-10

Metric

No.	Range	Range per rev.	Graduation [mm]	Scale	MPE any 1/10 revolution [µm]	MPE measuring range [µm]	H MPE (Hysteresis) [µm]	R MPE (Repeatability) [µm]
2900A-10	0,08 mm (plunger stroke: 4 mm)	0,1 mm	0,001	50-0-50	2	3	2	1
2900AB-10	0,08 mm (plunger stroke: 4 mm)	0,1 mm	0,001	50-0-50	2	3	2	1
2900A-70	0,08 mm (plunger stroke: 4 mm)	0,1 mm	0,001	50-0-50	2	3	2	1
2900AB-70	0,08 mm (plunger stroke: 4 mm)	0,1 mm	0,001	50-0-50	2	3	2	1
2900A-72	0,08 mm (plunger stroke: 4 mm)	0,1 mm	0,001	50-0-50	2	3	2	1
2900AB-72	0,08 mm (plunger stroke: 4 mm)	0,1 mm	0,001	50-0-50	2	3	2	1
2901A-10	0,16 mm (plunger stroke: 4,1mm)	0,2 mm	0,001	100-0-100	2	4	2	1
2901AB-10	0,16 mm (plunger stroke: 4,1mm)	0,2 mm	0,001	100-0-100	2	4	2	1

B-type delivered with flat back plate

No.	Measuring force [N]	Mass [g]	A [mm]	B [mm]	C [mm]	D [mm]	E [mm]	F [mm]	G [mm]	H [mm]	I [mm]
2900A-10	0,4-1,4	149	47,2	66	57	18,1	20	16,9	20,6	52	7,6
2900AB-10	0,4-1,4	140	47,2	66	57	18,1	20	16,9	20,6	52	7,6
2900A-70	0,4-2	150	47,2	67	57	18,1	20	12,3	26,2	52	7,6
2900AB-70	0,4-2	141	47,2	67	57	18,1	20	12,3	26,2	52	7,6
2900A-72	0,4-2	149	47,2	66	57	18,1	20	16,9	20,6	52	7,6
2900AB-72	0,4-2	140	47,2	66	57	18,1	20	16,9	20,6	52	7,6
2901A-10	0,4-1,5	149	47,2	66,1	57	18,1	20	16,9	20,7	52	7,6
2901AB-10	0,4-1,5	140	47,2	66,1	57	18,1	20	16,9	20,7	52	7,6

Functions	Series 2: 2900A-10 up to 2901AB-10	2900A-70 2900AB-70	2900A-72 2900AB-72
One revolution	●	●	●
Shockproof	●	●	●
Jeweled bearing	●	●	●
IP52			●
IP64		●	

Optional accessories

No.	Description
21AZB195	Limit Hands (green) 2pcs, Dial Indicator Series 2/3/4
21AZB148	Bezel Clamp for Dial Gauge, Metric, Series 2/3/4
21EZA198	Spindle Lifting Lever, for Digital Indicator, A-Type Dial Indicator Series 2/3/4
21JZA295	Spindle Lifting Cable, for Indicator, L=500mm
21JZA301	Spindle Lifting Cable with Auto Stop, for Indicator, L=300mm

Consumable spares

No.	Description
901312	Contact Element Ball Point, M2,5x0,45, 7,3mm Length, Carbide, Metric
21AAB562	NBR Rubber Boot, Digital Gauge ID-B, Dial Gauge IP63/IP64

21AAB562: for 2900A(B)-70 (IP model)

21JZA295 and 21JZA301: not for IP64 type

For accessories and contact points, see end of dial indicators section.

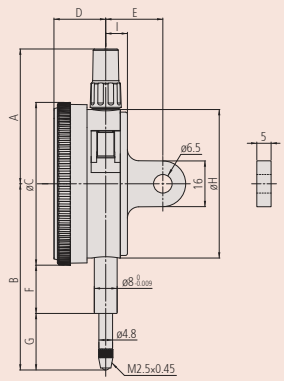

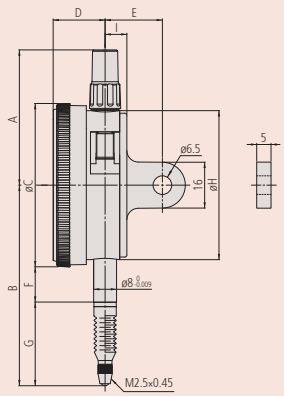

2900A(B)-70

All products to be sold to commercial customers.
Product illustrations are without obligation. Product descriptions, in particular any and all technical specifications, are only binding when explicitly agreed upon.

Metric Dial Indicators with Large Dial Face Series 3

Functions	Series 3					
	3046A 3046AB	3050A 3050AB	3052A-19 up to 3062AB-19	3058A-19 3058AB-19	3047A 3047AB	3109A-10 3109AB-10
Balanced dial					●	●
Continuous dial	●	●	●			
Coaxial revolution counter			●	●		
Cushioned end point		●				
Shockproof			●	●		●
Jeweled bearing			●	●		●

Optional accessories

No.	Description
21AZB195	Limit Hands (green) 2pcs, Dial Indicator Series 2/3/4
21AZB148	Bezel Clamp for Dial Gauge, Metric, Series 2/3/4

Consumable spares

No.	Description
901312	Contact Element Ball Point, M2,5x0,45, 7,3mm Length, Carbide, Metric
21AZA319	Contact Element Ball Point, M2,5x0,45, 8,3mm Length, Metric

901312: for 3046A(B), 3047A(B), 3050A(B), 3109A(B)
21AZA319: for 3052A(B)-19, 3058A(B)-19, 3060A(B)-19, 3062A(B)-19

For accessories and contact points, end of dial indicators section.

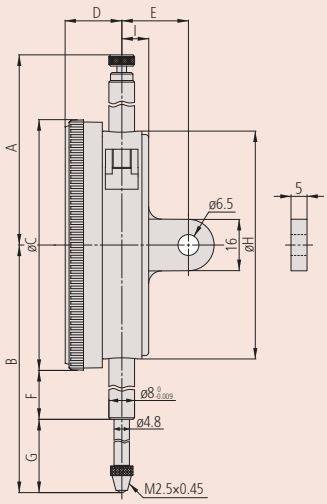

Series 3

This is a standard dial indicator. It offers you the following benefits:
- Large-diameter dial face ø = 78 mm for easy reading
- 0,01 / 0,001 mm graduation

3046A(B)

3047A(B)

3050A(B)

3052A(B)-19

3058A(B)-19

3060A(B)-19

3062A(B)-19

3109A(B)-10

All products to be sold to commercial customers.
Product illustrations are without obligation. Product descriptions, in particular any and all technical specifications, are only binding when explicitly agreed upon.

Mitutoyo

Metric Dial Indicators with Large Dial Face Series 3

Metric

No.	Range	Range per rev.	Graduation [mm]	Scale	MPE any 1/10 revolution [µm]	MPE any 1/2 revolution [µm]	MPE any 1 revolution [µm]	MPE measuring range [µm]	H MPE (Hysteresis) [µm]	R MPE (Repeatability) [µm]
3046A	10 mm	1 mm	0,01	0-100 (100-0)	5	9	10	15	3	3
3046AB	10 mm	1 mm	0,01	0-100 (100-0)	5	9	10	15	3	3
3047A	10 mm	1 mm	0,01	0-50-0	5	9	10	15	3	3
3047AB	10 mm	1 mm	0,01	0-50-0	5	9	10	15	3	3
3050A	20 mm	1 mm	0,01	0-100 (100-0)	8	10	11	20	4	3
3050AB	20 mm	1 mm	0,01	0-100 (100-0)	8	10	11	20	4	3
3052A-19	30 mm	1 mm	0,01	0-100 (0-100)	10	11	12	25	5	3
3052AB-19	30 mm	1 mm	0,01	0-100 (0-100)	10	11	12	25	5	3
3058A-19	50 mm	1 mm	0,01	0-100 (100-0)	10	12	13	30	6	3
3058AB-19	50 mm	1 mm	0,01	0-100 (100-0)	10	12	13	30	6	3
3060A-19	80 mm	1 mm	0,01	0-100 (0-100)	10	14	15	45	9	3
3060AB-19	80 mm	1 mm	0,01	0-100 (0-100)	10	14	15	45	9	3
3062A-19	100 mm	1 mm	0,01	0-100 (100-0)	12	17	20	50	9	3
3062AB-19	100 mm	1 mm	0,01	0-100 (100-0)	12	17	20	50	9	3
3109A-10	1 mm	0,2 mm	0,001	0-100-0	2,5	4	4,5	5	2	1
3109AB-10	1 mm	0,2 mm	0,001	0-100-0	2,5	4	4,5	5	2	1

3060A(B)-19 and 3062A(B)-19: use in a vertical position only

B-type delivered with flat back plate

No.	Measuring force [N]	Mass [g]	A [mm]	B [mm]	C [mm]	D [mm]	E [mm]	F [mm]	G [mm]	H [mm]	I [mm]
3046A	0,4-1,4	252	59,6	75,5	78	176	21	15,9	20,6	71	9
3046AB	0,4-1,4	237	59,6	75,5	78	176	21	15,9	20,6	71	9
3047A	0,4-1,4	252	59,6	75,5	78	176	21	15,9	20,6	71	9
3047AB	0,4-1,4	237	59,6	75,5	78	176	21	15,9	20,6	71	9
3050A	0,4-2	272	52,6	94	78	176	21	25,9	29,1	71	9
3050AB	0,4-2	257	52,6	94	78	176	21	25,9	29,1	71	9
3052A-19	0,4-2,5	285	72,9	104,3	78	176	21	25,9	39,4	71	9
3052AB-19	0,4-2,5	270	72,9	104,3	78	176	21	25,9	39,4	71	9
3058A-19	0,4-3	298	81,9	142,3	78	176	21	43,9	59,4	71	9
3058AB-19	0,4-3	283	81,9	142,3	78	176	21	43,9	59,4	71	9
3060A-19	0,4-3	314	120,9	202,3	78	176	21	73,9	89,4	71	9
3060AB-19	0,4-3	299	120,9	202,3	78	176	21	73,9	89,4	71	9
3062A-19	0,4-3,5	332	141,9	243,3	78	176	21	94,9	109,4	71	9
3062AB-19	0,4-3,5	317	141,9	243,3	78	176	21	94,9	109,4	71	9
3109A-10	0,4-1,5	270	59,6	79	78	176	21	15,9	14,1	71	9
3109AB-10	0,4-1,5	255	59,6	79	78	176	21	15,9	14,1	71	9

All products to be sold to commercial customers.
Product illustrations are without obligation. Product descriptions, in particular any and all technical specifications, are only binding when explicitly agreed upon.

Dial Indicators with Extra Large Dial Face Series 4

Functions	Series 4
Continuous dial	

Optional accessories

No.	Description
21AZB195	Limit Hands (green) 2pcs, Dial Indicator Series 2/3/4
21AZB148	Bezel Clamp for Dial Gauge, Metric, Series 2/3/4

Consumable spares

No.	Description
901312	Contact Element Ball Point, M2,5x0,45, 7,3mm Length, Carbide, Metric

For accessories and contact points, see end of dial indicators section.

Series 4

This is a standard dial indicator. It offers you the following benefits:

- Large-diameter dial face ø = 92 mm for easy reading

4046A(B)

Metric

No.	Range	Range per rev.	Graduation [mm]	Scale
4046A	10 mm	1 mm	0,01	0-100 (100-0)
4046AB	10 mm	1 mm	0,01	0-100 (100-0)

B-type delivered with flat back plate

No.	MPE any 1/10 revolution [µm]	MPE any 1/2 revolution [µm]	MPE any 1 revolution [µm]	MPE measuring range [µm]	H MPE (Hysteresis) [µm]	R MPE (Repeatability) [µm]	Measuring force [N]	Mass [g]	A [mm]	B [mm]	C [mm]
4046A	5	9	10	15	3	3	0,4-1,4	345	59,6	84	92
4046AB	5	9	10	15	3	3	0,4-1,4	330	59,6	84	92

No.	D [mm]	E [mm]	F [mm]	G [mm]	H [mm]	I [mm]
4046A	21,5	21	18,9	19,1	71	9
4046AB	21,5	21	18,9	19,1	71	9

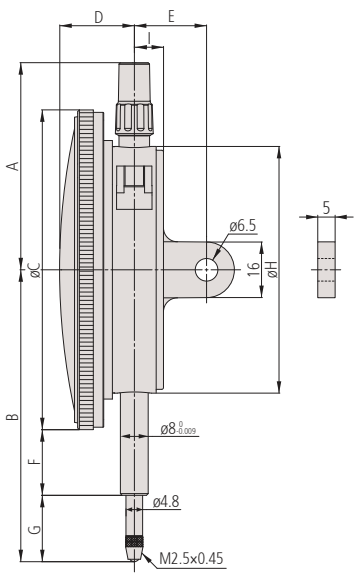

All products to be sold to commercial customers.
Product illustrations are without obligation. Product descriptions, in particular any and all technical specifications, are only binding when explicitly agreed upon.

Dial Indicators Back Plunger Type Series 1

Series 1

This is a back plunger, dial indicator with bezel ø 40 mm. It offers you the following benefits:

- It is ideal for use in applications where space is limited.

1160A

1162A

1960A

Functions	Series 1 1160A	1960A	1162A
Balanced dial	●	●	
Continuous dial			●
Reverse reading			●
One revolution		●	
Shockproof		●	

Optional accessories

No.	Description
21AAB363	Limit Hands (Green) 2 pcs., Dial Indicator Series 1, Test Indicator
136568	Holding Bar for Back Plunger Indicator, Ø8mm, 81mm Length
21AAA168	Holding Bar for Back Plunger Indicator, Ø8mm, 42mm Length
136567	Holding Bar for Back Plunger Indicator, Ø6mm, 81mm Length
21AAA166	Holding Bar for Back Plunger Indicator, Ø6mm, 42mm Length

Consumable spares

No.	Description
21AZA319	Contact Element Ball Point, M2,5x0,45, 8,3mm Length, Metric

For accessories and contact points, see end of dial indicators section.

Metric

No.	Range	Range per rev.	Graduation [mm]	Scale	MPE any 1/10 revolution [µm]	MPE any 1/2 revolution [µm]	MPE any 1 revolution [µm]	MPE measuring range [µm]	H MPE (Hysteresis) [µm]	R MPE (Repeatability) [µm]
1160A	5 mm	1 mm	0,01	0-100 (100-0)	7	11	12	18	4	3
1162A	5 mm	1 mm	0,01	100-0	7	11	12	18	4	3
1960A	1 mm (plunger stroke: 4 mm)	1,27 mm	0,01	50-0-50	7			15	3,5	3

No.	Measuring force [N]	Mass [g]	A [mm]	B [mm]	C [mm]	E [mm]	F [mm]	G [mm]	H [mm]
1160A	0,4-1,4	80	40	22,7	35,6	24,3	25	13,8	43,3
1162A	0,4-1,4	80	40	22,7	35,6	24,3	25	13,8	43,3
1960A	0,4-1,4	80	40	22,7	35,6	24,3	25	12,8	46

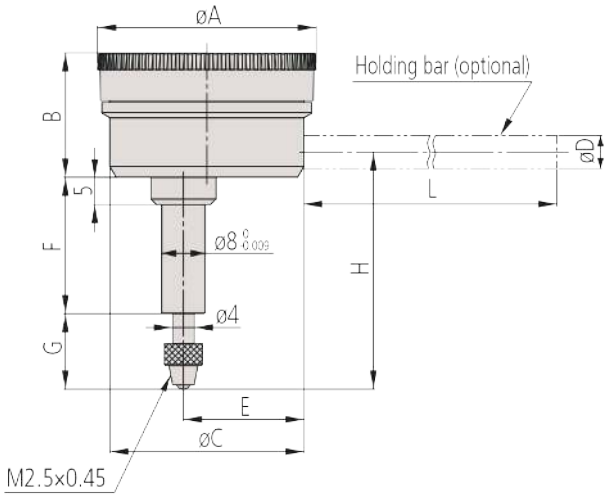

All products to be sold to commercial customers.
Product illustrations are without obligation. Product descriptions, in particular any and all technical specifications, are only binding when explicitly agreed upon.

Dial Indicators Back Plunger Type Series 2

Functions	Series 2 2960A	Series 2 2990A-10
Balanced dial	●	●
One revolution	●	●
Shockproof	●	●
Jeweled bearing		●

Series 2

This is a back plunger type dial indicator with bezel ø 57 mm.

2960A

2990A-10

Optional accessories

No.	Description
21AZB195	Limit Hands (green) 2pcs, Dial Indicator Series 2/3/4
136568	Holding Bar for Back Plunger Indicator, Ø8mm, 81mm Length
21AAA168	Holding Bar for Back Plunger Indicator, Ø8mm, 42mm Length
136567	Holding Bar for Back Plunger Indicator, Ø6mm, 81mm Length
21AAA166	Holding Bar for Back Plunger Indicator, Ø6mm, 42mm Length

Consumable spares

No.	Description
901312	Contact Element Ball Point, M2,5x0,45, 7,3mm Length, Carbide, Metric
21AZA319	Contact Element Ball Point, M2,5x0,45, 8,3mm Length, Metric

901312: for 2990A-10
21AZA319: for 2960A

2960A: holding bar 136567 and 21AAA166 only

For accessories and contact points, see end of dial indicators section.

Back plunger indicator with optional holding bar and limit hands.

Metric

No.	Range	Range per rev.	Graduation [mm]	Scale
2960A	1 mm (plunger stroke: 4 mm)	1,27 mm	0,01	50-0-50
2990A-10	0,1 mm (plunger stroke: 4 mm)	0,14 mm	0,001	50-0-50

No.	MPE any 1/10 revolution [µm]	MPE measuring range [µm]	H MPE (Hysteresis) [µm]	R MPE (Repeatability) [µm]	Measuring force [N]	Mass [g]
2960A	7	15	3,5	3	0,4-1,4	115
2990A-10	2	4	2	1	0,4-1,5	205

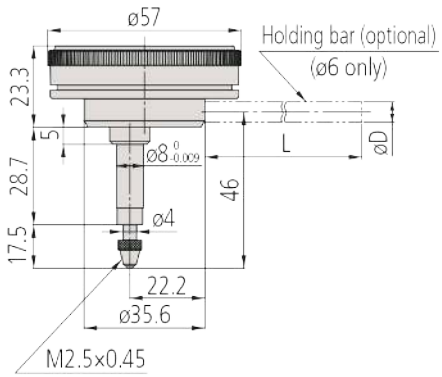

2960A

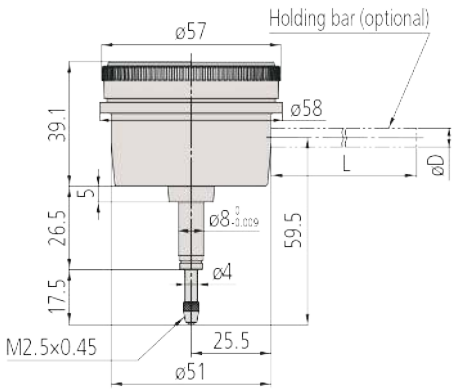

2990A-10

All products to be sold to commercial customers.
Product illustrations are without obligation. Product descriptions, in particular any and all technical specifications, are only binding when explicitly agreed upon.

Mitutoyo

Contact Points

Ball Point

Metric

No.	Type	Material	A [mm]	L [mm]
901312		Carbide	M2,5x0,45	7,3
120045		Carbide	M2,5x0,45	8
902119	Waterproof Type S-Type Series	Carbide	M2,5x0,45	8,3
21AZA319		Carbide	M2,5x0,45	8,3
21AZA320	Waterproof Type S-Type Series	Carbide	M2,5x0,45	12,1
21JAA225		Carbide	M2,5x0,45	14
21JAA224		Carbide	M2,5x0,45	17
120049		Carbide	M2,5x0,45	15
21AZA321	Waterproof Type S-Type Series	Carbide	M2,5x0,45	19,3
137391		Carbide	M2,5x0,45	20
21JAA226		Carbide	M2,5x0,45	22
120053		Carbide	M2,5x0,45	25
21AAA252		Carbide	M2,5x0,45	30
901994		Plastic	M2,5x0,45	7,3
120047		Ruby	M2,5x0,45	7,3
120051		Ruby	M2,5x0,45	15
137392		Ruby	M2,5x0,45	20
120055		Ruby	M2,5x0,45	25
21AAA253		Ruby	M2,5x0,45	30
120046		Sapphire	M2,5x0,45	8
120050		Sapphire	M2,5x0,45	15
120054		Sapphire	M2,5x0,45	25

901312

mm

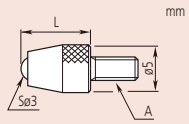

901312

mm

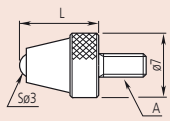

21AZA319

mm

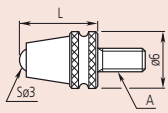

902119

mm

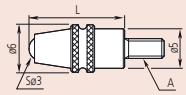

21AZA320

Ball Point

Metric

No.	Material	A [mm]	D [mm]
21AAA349	Carbide	M2,5x0,45	1
21AAA350	Carbide	M2,5x0,45	1,5
101122	Steel	M2,5x0,45	1,8
21AAA351	Carbide	M2,5x0,45	2,5
21AAA352	Carbide	M2,5x0,45	4

101122

mm

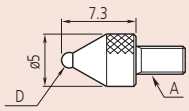

Shell Type Point

Metric

No.	Material	A [mm]	L [mm]
101386	Steel	M2,5x0,45	5
101118	Steel	M2,5x0,45	10
137393	Steel	M2,5x0,45	15
101387	Steel	M2,5x0,45	20
101388	Steel	M2,5x0,45	25
21AAA254	Steel	M2,5x0,45	30

101118

mm

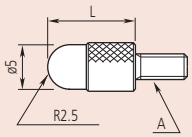

All products to be sold to commercial customers.
Product illustrations are without obligation. Product descriptions, in particular any and all technical specifications, are only binding when explicitly agreed upon.

Contact Points

Conical Point

101385

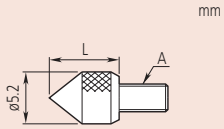

101385

Metric

No.	Material	Tip angle	A [mm]	L [mm]
101385	Steel	90°	M2,5x0,45	5
101120	Steel	60°	M2,5x0,45	10
120057	Carbide	90°	M2,5x0,45	9
120068	Carbide	90°	M2,5x0,45	15

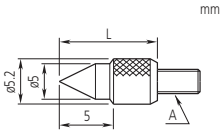

101120

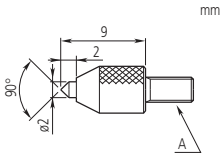

120057

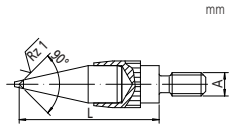

120068

Needle Point

101121

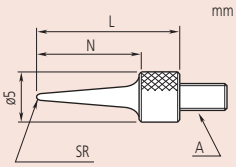

Metric

No.	Material	SR [mm]	A [mm]	L [mm]	N [mm]
101121	Steel	0,4	M2,5x0,45	15	11
137413	Steel	0,2	M2,5x0,45	17	13
21AAA255	Steel	0,4	M2,5x0,45	25	21
21AAA256	Steel	0,4	M2,5x0,45	35	31

Cylinder Point

137257

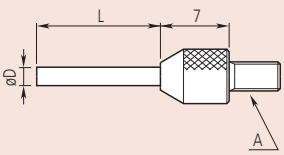

Metric

No.	Material	D Ø [mm]	A [mm]	L [mm]
120066	Carbide	0,45	M2,5x0,45	3
21AAA329	Carbide	0,45	M2,5x0,45	5
120065	Carbide	1	M2,5x0,45	3
21AAA330	Carbide	1	M2,5x0,45	5
21AAA331	Carbide	1	M2,5x0,45	8
21AAA332	Carbide	1	M2,5x0,45	10
21AAA333	Carbide	1	M2,5x0,45	20
21AAA334	Carbide	1	M2,5x0,45	40
21AAA335	Carbide	1,5	M2,5x0,45	5
21AAA336	Carbide	1,5	M2,5x0,45	10
120064	Carbide	1,5	M2,5x0,45	13
21AAA337	Carbide	1,5	M2,5x0,45	20
21AAA338	Carbide	1,5	M2,5x0,45	40
137257	Carbide	2	M2,5x0,45	8
21AAA257	Carbide	2	M2,5x0,45	18
21AAA258	Carbide	2	M2,5x0,45	28
21AAA339	Carbide	2	M2,5x0,45	40

Spherical Point

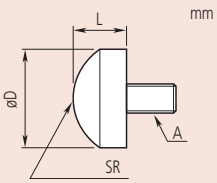

Steel

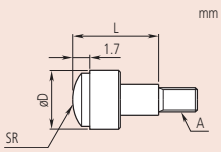

Carbide

Metric

No.	Material	D Ø [mm]	SR [mm]	A [mm]	L [mm]
111460	Steel	5,5	5	M2,5x0,45	3
125258	Steel	7,9	5	M2,5x0,45	5
101119	Steel	10	7	M2,5x0,45	5
120058	Carbide	5,5	5	M2,5x0,45	5
120059	Carbide	7,5	7	M2,5x0,45	10
120060	Carbide	10,5	10	M2,5x0,45	10

All products to be sold to commercial customers.
Product illustrations are without obligation. Product descriptions, in particular any and all technical specifications, are only binding when explicitly agreed upon.

Mitutoyo

Contact Points

Flat Point

Metric

No.	Material	Flatness [µm]	D Ø [mm]	A [mm]	L [mm]
131365	Steel	3	5	M2,5x0,45	8
21AAA340	Steel	3	5	M2,5x0,45	10
101117	Steel	5	10	M2,5x0,45	10
21AAA341	Steel	5	15	M2,5x0,45	10
21AAA342	Steel	5	20	M2,5x0,45	10
21AAA343	Steel	5	25	M2,5x0,45	10
21AAA344	Steel	5	30	M2,5x0,45	10

131365

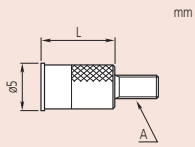

Flatness 3 µm

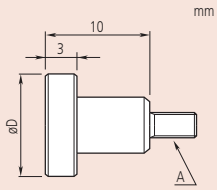

Flatness 5µm

Flat Point

Metric

No.	Material	Flatness [µm]	D Ø [mm]	A [mm]	L [mm]
120056	Carbide	3	5	M2,5x0,45	8
120041	Carbide	3	5,2	M2,5x0,45	5
120042	Carbide	3	7	M2,5x0,45	10
120043	Carbide	3	10,5	M2,5x0,45	10
21AAA345	Carbide	5	17	M2,5x0,45	10
21AAA346	Carbide	5	22	M2,5x0,45	10
21AAA347	Carbide	5	27	M2,5x0,45	10
21AAA348	Carbide	5	32	M2,5x0,45	10
137255	Carbide	3	7	M2,5x0,45	10
137399	Carbide	3	9	M2,5x0,45	10

120056

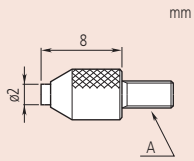

120056

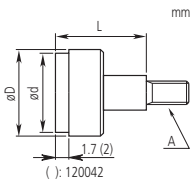

120041

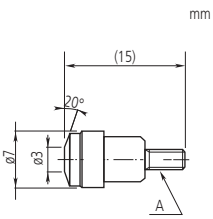

137255

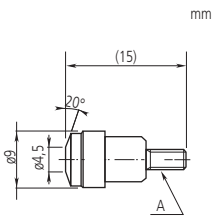

137399

Knife Edge Point

Metric

No.	Material	SR [mm]	A [mm]
120067	Carbide	0,2	M2,5x0,45

120067

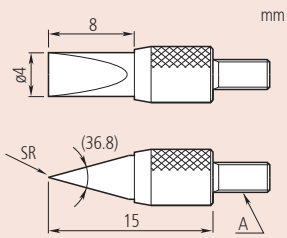

All products to be sold to commercial customers.
Product illustrations are without obligation. Product descriptions, in particular any and all technical specifications, are only binding when explicitly agreed upon.

Contact Points

Blade Point

120062

mm

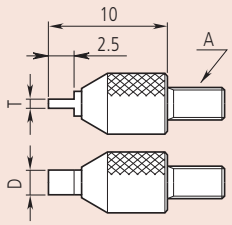

Metric

No.	Material	A [mm]	D [mm]	T [mm]
120061	Carbide	M2,5x0,45	2	0,4
120062	Carbide	M2,5x0,45	2	0,6
120063	Carbide	M2,5x0,45	4	1

Lever Point

900391

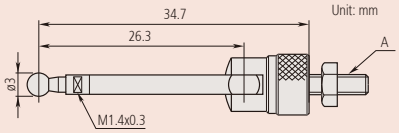

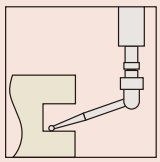

Metric

No.	Material	A [mm]
900391	Steel	M2,5x0,45

Roller Point

901954

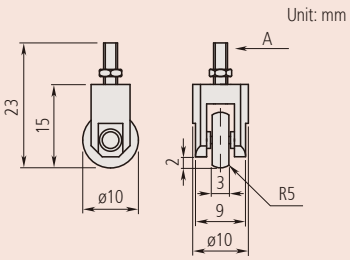

Metric

No.	Material	A [mm]
901954	Steel	M2,5x0,45

All products to be sold to commercial customers.
Product illustrations are without obligation. Product descriptions, in particular any and all technical specifications, are only binding when explicitly agreed upon.

Mitutoyo

Contact Points

Contact Point Set

Metric

No.	Material	Remarks	A [mm]
7822	Steel	Set with 6 contact points (M2,5x0,45): 131365, 101117, 101121, 101119, 101118, 101387	M2,5x0,45

Standard accessories

No.	Description
131365	Contact Element Flat, M2,5x0,45, 5mm, Steel, Metric
101117	Contact Element Flat, M2,5x0,45, 10mm, Steel, Metric
101121	Contact Element Needle, M2,5x0,45, R=0,4mm, Steel, Metric
101119	Contact Element Spherical, M2,5x0,45, R=7mm, Steel, Metric
101118	Contact Element Shell, M2,5x0,45, R=2,5mm, 10mm Length, Steel, Metric
101387	Contact Element Shell, M2,5x0,45, R=2,5mm, 20mm Length, Steel, Metric

Extension Rods

Extensions

Metric

No.	Material	A [mm]	L [mm]
303611	Steel	M2,5x0,45	10
21AAA259A	Steel	M2,5x0,45	15
303612	Steel	M2,5x0,45	20
21AAA259B	Steel	M2,5x0,45	25
303613	Steel	M2,5x0,45	30
21AAA259C	Steel	M2,5x0,45	35
21AAA259D	Steel	M2,5x0,45	40
21AAA259E	Steel	M2,5x0,45	45
21AAA259F	Steel	M2,5x0,45	50
21AAA259G	Steel	M2,5x0,45	55
304146	Steel	M2,5x0,45	60
21AAA259H	Steel	M2,5x0,45	65
21AAA259J	Steel	M2,5x0,45	70
21AAA259L	Steel	M2,5x0,45	75
21AAA259M	Steel	M2,5x0,45	80
304147	Steel	M2,5x0,45	90
303614	Steel	M2,5x0,45	100
21AAA011	Steel		
21AAA012	Steel		

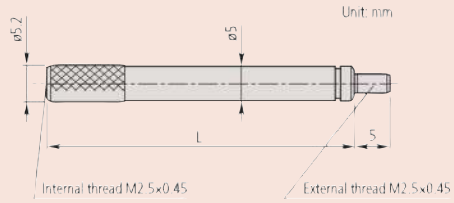

A = M 2,5 x 0,45 mm (metric)

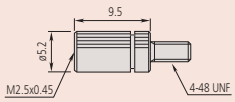

21AAA011
Adapter AGD/ANSI Indicator (INCH) to EN ISO M2,5x0,45 thread

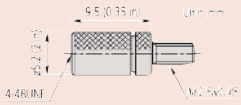

21AAA012
Adapter EN ISO Indicator (Metric) to ANSI/AGD 4-48UNF thread

All products to be sold to commercial customers.
Product illustrations are without obligation. Product descriptions, in particular any and all technical specifications, are only binding when explicitly agreed upon.

Bases for Indicators

Optional accessories

No.	Description
21JAA269	Set Screw for Base (Indicator)

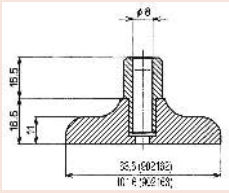

Thickness : 16 mm

Bases

21JZA209

No.	Base (W x T)	Remarks
21JZA208	63,5 x 16 mm	Delivered without set screw for base/indicator
21JZA209	63,5 x 101,6 mm	Delivered without set screw for base/indicator

All products to be sold to commercial customers.
Product illustrations are without obligation. Product descriptions, in particular any and all technical specifications, are only binding when explicitly agreed upon.

Mitutoyo

Interchangeable Backs

Flat Back Plate

With centre lug

With magnet

With laterally offset back lug

With post

With screw mount

With adjustable back

With rack

With adjustable bracket

No.	For Series	Dimensions [mm]	Remarks
191559	1911AB-10, 1913AB-10, 1921AB-10, 1923AB-10, 1925AB-10	a = 1 mm	Flat back plate
101211	1	a = 2,2 mm	Flat back plate
136872	1 (waterproof)	a = 1,5 mm	Flat back plate
137906	1003A, 1003T	a = 1 mm	Flat back plate
101039	2/ ID-C/ ID-S/ ID-SS	a = 2,5 mm	Flat back plate
21AZB231	2 (waterproof S type and A type)	a = 2,5 mm	Flat back plate
100836	3/ 4	a = 3 mm	Flat back plate
190561	1911T-10, 1911A-10, 1913T-10, 1913A-10	a = 5 mm	Back plate with centre lug
101210	1	a = 5 mm	Back plate with centre lug
137905	1003A, 1003T	a = 5 mm	Back plate with centre lug
101040	2/ ID-C/ ID-F/ ID-H/ ID-S/ ID-SS	a = 5 mm	Back plate with centre lug
21AZB230	2 (waterproof S type and A type)	a = 5 mm	Back plate with centre lug
100691	3/ 4	a = 5 mm	Back plate with centre lug
900928	2/ ID-C/ ID-F/ ID-H/ ID-S/ ID-SS		Back plate with magnet
900929	3/ 4		Back plate with magnet
101167	2/ ID-C/ ID-F/ ID-H/ ID-S/ ID-SS		Back plate with laterally offset back lug
100837	3/ 4		Back plate with laterally offset back lug
193172	1		Back plate with post
101169	2/ ID-C/ ID-F/ ID-H/ ID-S/ ID-SS		Back plate with post
100839	3/ 4		Back plate with post
193173	1	M 6 x 1	Back plate with screw mount
136023	2/ ID-C/ ID-F/ ID-H/ ID-S/ ID-SS	M 6 x 1	Back plate with screw mount
136024	3/ 4	M 6x 1	Back plate with screw mount
136025	1	M 6 x 1	Back plate with adjustable back
136026	2/ ID-C/ ID-F/ ID-H/ ID-S/ ID-SS	M 6 x 1	Back plate with adjustable back
136027	3/ 4	M 6 x 1	Back plate with adjustable back
129902	2/ ID-C/ ID-F/ ID-H/ ID-S/ ID-SS		Back plate with rack
901963	2/ ID-C/ ID-F/ ID-H/ ID-S/ ID-SS		Back plate with adjustable bracket
21EZA145	ID-N, ID-B	5 mm	Back plate with centre lug

Flat back plate

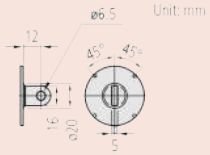

With centre lug

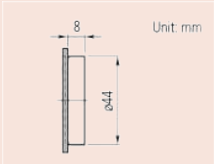

With magnet

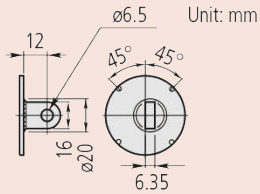

With laterally offset back lug

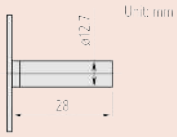

With post

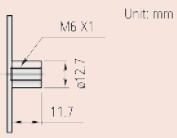

With screw mount

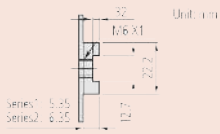

With adjustable stem

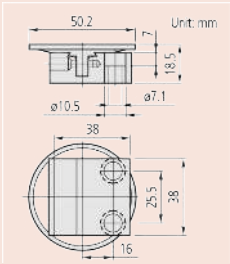

With adjustable bracket

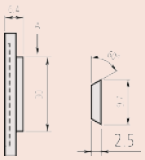

With dovetail

All products to be sold to commercial customers.
Product illustrations are without obligation. Product descriptions, in particular any and all technical specifications, are only binding when explicitly agreed upon.

Spindle Lifting Accessories

- The spindle lifting lever is attached to the top end of the spindle for improved inspection efficiency when using a dial indicator mounted on a stand.

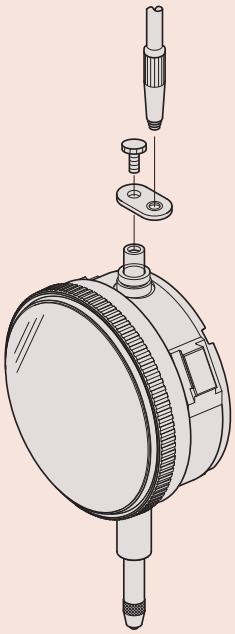

Application 21JZA301

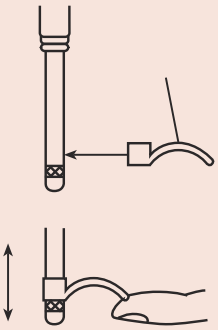

Application 137693

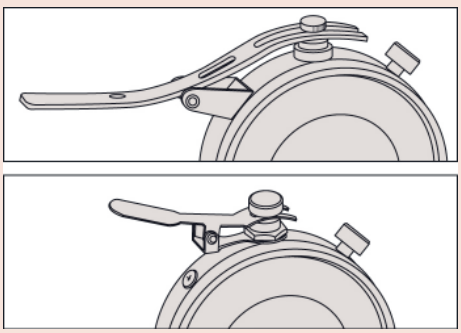

Application spindle lifting lever

21JZA301

21JZA295

137693

902100

21AZB149

21AZB150

21EZA198

No.	Remarks
21JZA301	Spindle lifting cable with auto-stop function, 300 mm length for all digital indicators except ID-N and ID-B, except all dial indicators with range >10 mm (1/2") except 2048A(B)-10, 2046A(B)-80, 1911A(B)-10, 1913(B)-10, 1921A(B)-10, 1923A(B)-10, 1925A(B)-10, except back plunger dial indicator and waterproof dial indicator, except 2971AB, 2972AB, 2973AB, 2976AB, 2977AB, 2978AB
137693	Spindle lifting handle suitable for 4,8 mm spindle (plunger) diameter
902100	Spindle lifting lever S-type and A-type dial indicators Series 1
21AZB149	Spindle lifting lever S-type dial indicators Series 2,3 and 4 up to 10 mm/0,4"
21AZB150	Spindle lifting lever S-type and A-type dial indicators Series 2,3 >10 mm/0,4" up to 20 mm/0,8"
21JZA295	Spindle lifting cable without auto-stop function, 500 mm length for all digital indicators except ID-N and ID-B, except all dial indicators with range >10 mm (1/2") except 2048A(B)-10, 2046A(B)-80, 1911A(B)-10, 1913(B)-10, 1921A(B)-10, 1923A(B)-10, 1925A(B)-10, except back plunger dial indicator and waterproof dial indicator, except 2971AB, 2972AB, 2973AB, 2976AB, 2977AB, 2978AB
21EZA198	Spindle lifting lever digital indicators ID-C (up to 12 mm range), ID-S, ID-SS and A-type dial indicators Series 2, 3 and 4 up to 10 mm/0,5" range

All products to be sold to commercial customers.
Product illustrations are without obligation. Product descriptions, in particular any and all technical specifications, are only binding when explicitly agreed upon.

Mitutoyo

Other Accessories for Dial Indicator

This accessory is not applicable to 1003A(B), 1911A(B)-10, 1913A(B)-10, 1921A(B)-10, 1923A(B)-10, 1925A(B)-10, 2971AB, 2972AB, 2973AB, 2976AB, 2977AB, 2978AB

Colour-coded Spindle Caps

- 9 colour-coded spindle caps are available for dial indicators with a range of 10 mm or less.

No.	Colour	Remarks
193051	Black	For standard type
193051B	Blue	For standard type
193051D	Orange	For standard type
193051G	Green	For standard type
193051P	Pink	For standard type
193051R	Red	For standard type
193051S	Dark blue	For standard type
193051W	White	For standard type
193051Y	Yellow	For standard type
193595	Black	For waterproof type
193595B	Blue	For waterproof type
193595D	Orange	For waterproof type
193595G	Green	For waterproof type
193595P	Pink	For waterproof type
193595R	Red	For waterproof type
193595S	Dark blue	For waterproof type
193595W	White	For waterproof type
193595Y	Yellow	For waterproof type

Limit Stickers

- Tolerance markings.
- For dial indicators, Series 2 Ø 55,6 mm or 57 mm.
- 10 pieces per set.

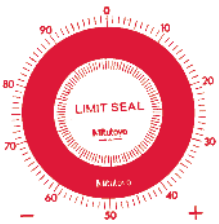

136420

136421

136422

No.	For Series	Colour
136420	Series 2 Dial Indicator 55,6 or 57 mm bezel/outside diameter	Red
136421	Series 2 Dial Indicator 55,6 or 57 mm bezel/outside diameter	Green
136422	Series 2 Dial Indicator 55,6 or 57 mm bezel/outside diameter	Yellow

All products to be sold to commercial customers.
Product illustrations are without obligation. Product descriptions, in particular any and all technical specifications, are only binding when explicitly agreed upon.

Other Accessories for Dial Indicator

Crystal setter and assorted thrust pads

These crystal setters and thrust pads are used to make it easy to insert round dial glasses, and offer you the following benefits:

- You can use them to insert round dial glasses.
- Assorted thrust pads for diameters: 19,5/22,5/25,5/28,5/32,5/35/38/50mm.

7000

No.	Remarks
7000	Crystal setter and assorted thrust pads

Tool set

- For repairing analogue dial indicators.

7823EU

No.	Remarks
7823EU	Set with different tools included

Standard accessories

No.	Description
129730	Spindle-Rest (V-Anvil)/7823
129732	Pin Remover/7823
129733	Punch/7823
129734	Metal Bearing Adjuster/7823
129735	Pinion Set/7823
129736	Reamer Ø1mm/7823
193702	Reamer Ø0,6mm/7823
21JAA273	Reamer Ø0,5mm, 1/20 taper/7823
126628	Pointer removing tool/7823
901180	Pliers/7823
901179	Nippers/7823
129731	Pin rest/7823
901178	Hammer/7823
21JAA314	Stick/7823
901177	Brush/7823
901176	Brush/7823
901174	Phillips & Plain Screwdrivers
901175	Pin-vise/7823
129729	Tweezers/7823
901173	Philips Screwdriver
126630	Pointer removing tip Ø0,8mm/7823
126630B	Hand Remover Pin 0,5mm 7823
126630C	Pointer removing tip Ø1,6mm/7823
100699	Adjustable Nut/7823

All products to be sold to commercial customers.
Product illustrations are without obligation. Product descriptions, in particular any and all technical specifications, are only binding when explicitly agreed upon.

Mitutoyo

Dial Test Indicators Lever Type

Lever Indicator Overview

Choices of dial position

Our product lineup offers four models, each with a different dial orientation on the frame to allow best readability in any situation.

- Horizontal type: standard model - with dial on the top of the frame
- Vertical type: dial on the end of the frame
- Horizontal (20° tilted face) type: dial on top of the frame, tilted backward by 20°
- Parallel type: dial on the side of the frame

Stylus length is on the dial face

The length of the applied stylus affects the indicator's scale factor. The appropriate length is indicated on the dial face to assist a customer when ordering the correct replacement stylus.

ø8 stem to fit dovetails is a standard accessory

A ø8mm plain stem (21CAB104) for the Metric models that attaches to any dovetail on the frame is supplied as a standard accessory. Other sizes of stem to fit the dovetails are available as optional accessories:

ø4mm stem: 21CAB106

ø6mm stem: 21CAB103

Attachable limit hands

Limit hands (optional) can be attached to the bezel as for dial indicators, allowing easy identification of the upper and lower limits of tolerance.

Improved stylus bearing

The conventional method of mounting the stylus pivot bearing screw in the frame is prone to allowing looseness to develop with prolonged use.

A unique sub-plate structure to house this screw has now been incorporated in all models and eliminates this drawback.

All products to be sold to commercial customers.
Product illustrations are without obligation. Product descriptions, in particular any and all technical specifications, are only binding when explicitly agreed upon.

Lever Indicators Horizontal Type - 0,01 mm

Series 513

This is a Dial Test Indicator (Lever Type) which offers you the following benefits:

- Drastically enhanced durability, sensitivity and visibility.
- Glare-free flat crystal face allows easy reading of graduations.
- O-ring seal on the bezel has the effect of providing smooth rotation and prevents dust and oil from penetrating through to the dial face.
- The stylus length is on the dial face to reorder a replacement
- Multi-layer coatings on the crystal.

513-466-10E

513-424-10E

513-414-10E

513-464-10E

513-404-10E

513-415-10E

513-426-10E

513-466-10E

513-424-10E

513-414-10E

513-464-10E

513-404-10E

513-415-10E

513-426-10E

Specifications

Contact point	Thread M 1,7 x 0,35

For optional accessories, see end of lever indicators section.

Standard accessories

No.	Description
900321	Swivel Clamp, for D=4/8mm, Dovetail
900209	Holding Bar for Swivel Clamp, 9x9mm, 100mm Length

Optional accessories

No.	Description
21AAB363	Limit Hands (Green) 2 pcs., Dial Indicator Series 1, Test Indicator

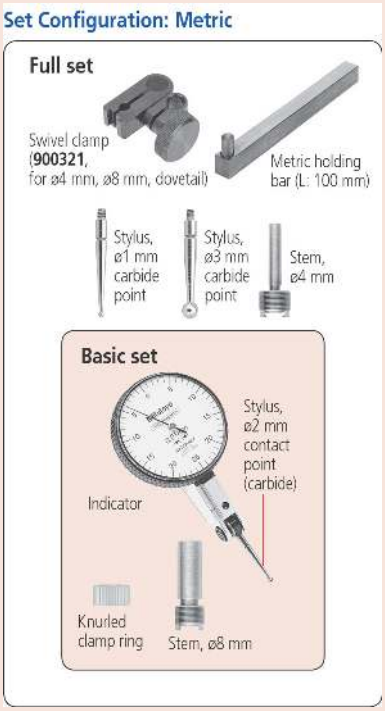

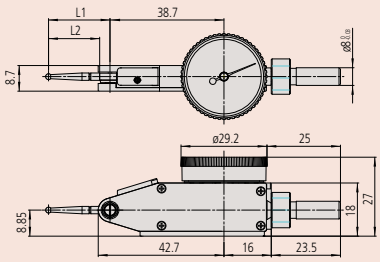

513-466-10E, 513-464-10E

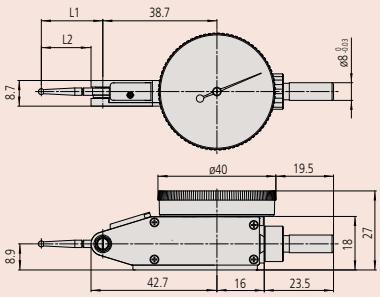

513-404-10E, 513-404-10T, 513-414-10E, 513-414-10T, 513-415-10E, 513-415-10T, 513-424-10E, 513-424-10T, 513-426-10E, 513-474-10E, 513-477-10E, 513-478-10E

All products to be sold to commercial customers.
Product illustrations are without obligation. Product descriptions, in particular any and all technical specifications, are only binding when explicitly agreed upon.

Mitutoyo

Lever Indicators Horizontal Type - 0,01 mm

Metric

Basic set

No.	Graduation [mm]	Scale	MPE any 10 scale divisions [µm]	MPE any 1/2 revolution [µm]	MPE any 1 revolution [µm]	MPE measuring range [µm]	H MPE (Hysteresis) [µm]	R MPE (Repeatability) [µm]	Carbide stylus tip ø2 mm No.
513-466-10E	0,01	0-25-0	5			5	3	3	137557
513-424-10E	0,01	0-25-0	5			5	3	3	137557
513-414-10E	0,01	0-25-0	5			10	4	3	131324
513-464-10E	0,01	0-40-0	5	6		8	3	3	103006
513-404-10E	0,01	0-40-0	5	6		8	3	3	103006
513-415-10E	0,01	0-50-0	5	8		10	4	3	136013
513-426-10E	0,01	0-25-0	5		10	16	4	3	137557

No.	Measuring force [N]	Mass [g]	D Ø [mm]	L1 [mm]	L2 [mm]
513-466-10E	0,01-0,3	41	29,2	22,2	18,7
513-424-10E	0,01-0,3	45	40	22,2	18,7
513-414-10E	0,01-0,2	45	40	37,4	33,9
513-464-10E	0,01-0,3	41	29,2	20,9	17,4
513-404-10E	0,01-0,3	45	40	20,9	17,4
513-415-10E	0,01-0,2	45	40	44,5	41
513-426-10E	0,01-0,4	45	40	22,2	18,7

Metric

Basic set - Ruby contact point

No.	Graduation [mm]	Scale	MPE any 10 scale divisions [µm]	MPE any 1/2 revolution [µm]	MPE measuring range [µm]	H MPE (Hysteresis) [µm]	R MPE (Repeatability) [µm]	Ruby stylus tip ø2 mm No.	Measuring force [N]
513-478-10E	0,01	0-25-0	5		5	3	3	21CZA210	0,01-0,3
513-474-10E	0,01	0-40-0	5	6	8	3	3	21CZA201	0,01-0,3
513-477-10E	0,01	0-50-0	5	8	10	4	3	21CZA212	0,01-0,3

No.	Mass [g]	D Ø [mm]	L1 [mm]	L2 [mm]
513-478-10E	45	40	22,2	18,7
513-474-10E	45	40	20,9	17,4
513-477-10E	45	40	44,5	41

Metric

Full set

No.	Graduation [mm]	Scale	MPE any 10 scale divisions [µm]	MPE any 1/2 revolution [µm]	MPE measuring range [µm]	H MPE (Hysteresis) [µm]	R MPE (Repeatability) [µm]	Carbide stylus tip ø2 mm No.	Measuring force [N]
513-424-10T	0,01	0-25-0	5		5	3	3	137557	0,01-0,3
513-414-10T	0,01	0-25-0	5		10	4	3	131324	0,01-0,2
513-404-10T	0,01	0-40-0	5	6	8	3	3	103006	0,01-0,3
513-415-10T	0,01	0-50-0	5	8	8	4	3	136013	0,01-0,2

No.	Mass [g]	D Ø [mm]	L1 [mm]	L2 [mm]
513-424-10T	45	40	22,2	18,7
513-414-10T	45	40	37,4	33,9
513-404-10T	45	40	20,9	17,4
513-415-10T	45	40	44,5	41

All products to be sold to commercial customers.
Product illustrations are without obligation. Product descriptions, in particular any and all technical specifications, are only binding when explicitly agreed upon.

Lever Indicators - Horizontal Type - 0,001/0,002 mm

Series 513

This is a Dial Test Indicator (Lever Type) which offers you the following benefits:

- Drastically enhanced durability, sensitivity and visibility.
- Glare-free flat crystal face allows easy reading of graduations.
- O-ring seal on the bezel has the effect of providing smooth rotation and prevents dust and oil from penetrating through to the dial face.
- The stylus length is on the dial face to reorder a replacement
- Multi-layer coatings on the crystal.

513-401-10E 513-465-10E 513-405-10E 513-425-10E

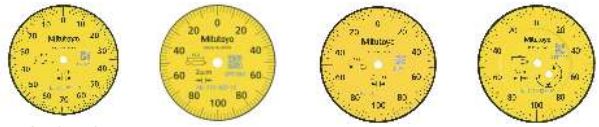

513-401-10E 513-465-10E 513-405-10E 513-425-10E

Specifications

Contact point	Thread M 1,7 x 0,35

For optional accessories, see end of lever indicators section.

Optional accessories

No.	Description
21AAB363	Limit Hands (Green) 2 pcs., Dial Indicator Series 1, Test Indicator

Set Configuration: Metric

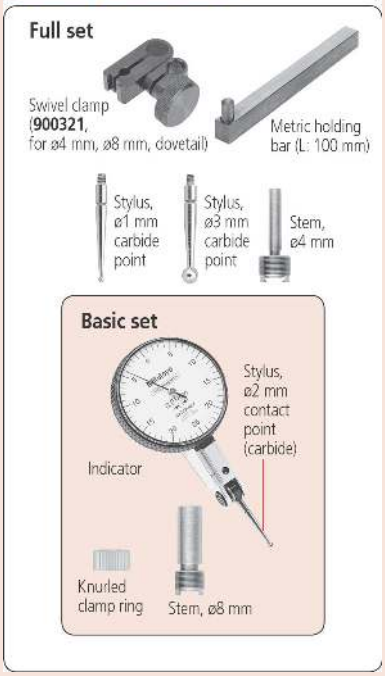

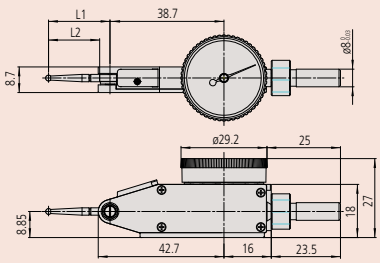

513-465-10E

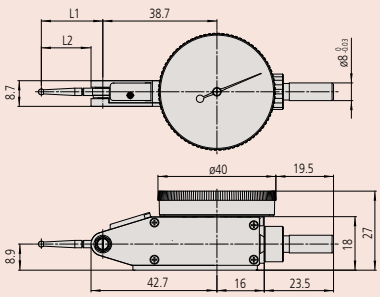

513-401-10E, 513-405-10E, 513-425-10E, 513-475-10E

Metric Basic set

No.	Range	Graduation [mm]	Scale	MPE any 10 scale divisions [µm]	MPE any 1/2 revolution [µm]	MPE any 1 revolution [µm]	MPE measuring range [µm]	H MPE (Hysteresis) [µm]	R MPE (Repeatability) [µm]
513-401-10E	0,14	0,001	0-70-0	2	3		3	2	1
513-405-10E	0,2	0,002	0-100-0	2	3		3	2	1
513-465-10E	0,2	0,002	0-100-0	2	3		3	2	1
513-425-10E	0,6	0,002	0-100-0	2	3	5	7	4	1

No.	Carbide stylus tip ø2 mm No.	Measuring force [N]	Mass [g]	D Ø [mm]	L1 [mm]	L2 [mm]
513-401-10E	103010	0,01 - 0,3	45	40	14,7	11,2
513-405-10E	103011	0,01 - 0,3	45	40	18,7	15,2
513-465-10E	103011	0,01 - 0,3	41	29,2	18,7	15,2
513-425-10E	103011	0,01 - 0,4	45	40	18,7	15,2

Metric Basic set - Ruby contact point

No.	Range	Graduation [mm]	Scale	MPE any 10 scale divisions [µm]	MPE any 1/2 revolution [µm]	MPE measuring range [µm]	H MPE (Hysteresis) [µm]	R MPE (Repeatability) [µm]	Ruby stylus tip ø2 mm No.
513-471-10E	0,14	0,001	0-70-0	2	3	3	2	1	21CZA209
513-475-10E	0,2	0,002	0-100-0	2	3	3	2	1	21CZB068

No.	Measuring force [N]	Mass [g]	D Ø [mm]	L1 [mm]	L2 [mm]
513-471-10E	0,01 - 0,3	45	40	14,7	11,2
513-475-10E	0,01 - 0,3	45	40	18,7	15,2

Metric Full set

No.	Range	Graduation [mm]	Scale	MPE any 10 scale divisions [µm]	MPE any 1/2 revolution [µm]	MPE measuring range [µm]	H MPE (Hysteresis) [µm]	R MPE (Repeatability) [µm]	Carbide stylus tip ø2 mm No.
513-405-10T	0,2	0,002	0-100-0	2	3	3	2	1	103011

No.	Measuring force [N]	Mass [g]	D Ø [mm]	L1 [mm]	L2 [mm]
513-405-10T	0,01 - 0,3	45	40	18,7	15,2

All products to be sold to commercial customers.
Product illustrations are without obligation. Product descriptions, in particular any and all technical specifications, are only binding when explicitly agreed upon.

Mitutoyo

Lever Indicators and Magnet Stand

Series 513

This is a Dial Test Indicator (Lever Type) including mini magnet stand. It offers you the following benefits:

- It contains various accessories including a mini magnet stand, a swivel clamp and a stem with a knurled clamp ring.
- Easy to use

513-908-10E

513-908-10E
Indicator
Centered, bi-directional action for automatic reversal of measuring direction.
Jewelled bearings and precision gears and pinions for smooth, accurate movement and quick response.

Stand
Magnetic force : 150 N.
Mass : 180 g.

Metric

No.	Content of Set	Range	Graduation [mm]	Scale	MPE any 10 scale divisions [µm]	MPE any 1/2 revolution [µm]	MPE measuring range [µm]	H MPE (Hysteresis) [µm]	R MPE (Repeatability) [µm]	Mass [g]
513-908-10E	513-404-10E: Lever Indicator 7014-10: Mini Magnet Stand 902804: Stem with Knurled Clamp Ring	0,8	0,01	0-40-0	5	6	8	3	3	222

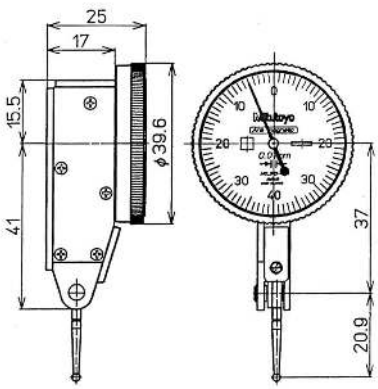

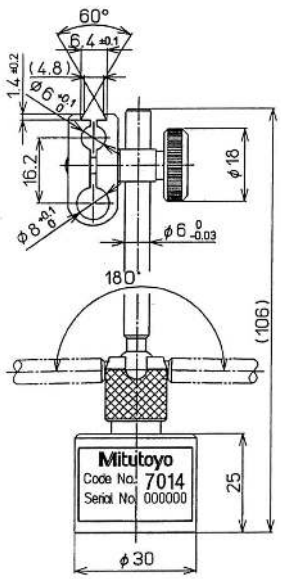

All products to be sold to commercial customers.
Product illustrations are without obligation. Product descriptions, in particular any and all technical specifications, are only binding when explicitly agreed upon.

Lever Indicators Horizontal (20° Tilted Face) Type

Series 513

This is a Dial Test Indicator (Lever Type) which offers you the following benefits:

- Drastically enhanced durability, sensitivity and visibility.
- Glare-free flat crystal face allows easy reading of graduations.
- O-ring seal on the bezel has the effect of providing smooth rotation and prevents dust and oil from penetrating through to the dial face.
- The stylus length is on the dial face to reorder a replacement
- Multi-layer coatings on the crystal.

Specifications

Contact point	Thread M 1,7 x 0,35

For optional accessories, see end of lever indicators section.

Optional accessories

No.	Description
21AAB363	Limit Hands (Green) 2 pcs., Dial Indicator Series 1, Test Indicator

Set Configuration: Metric

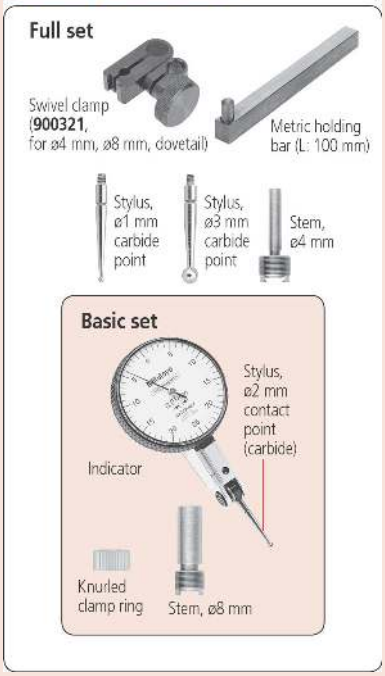

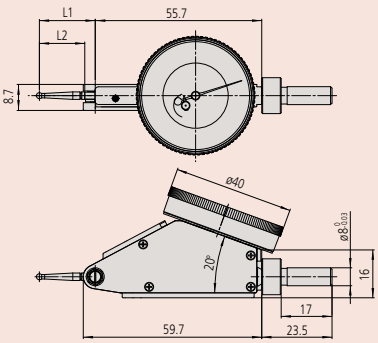

513-445-10E

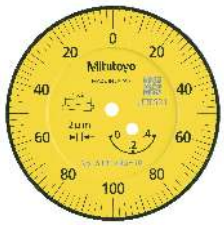

513-445-10E

513-444-10E

513-444-10E

Metric — Basic set

No.	Range	Graduation [mm]	Scale	MPE any 10 scale divisions [µm]	MPE any 1/2 revolution [µm]	MPE any 1 revolution [µm]	MPE measuring range [µm]	H MPE (Hysteresis) [µm]	R MPE (Repeatability) [µm]
513-445-10E	0,4	0,002	0-100-0	2	3	5	6	4	1
513-444-10E	1,6	0,01	0-40-0	5	8	10	16	4	3

No.	Carbide stylus tip ø2 mm No.	Measuring force [N]	Mass [g]	D Ø [mm]	L1 [mm]	L2 [mm]
513-445-10E	103011	0,01-0,3	48	40	18,7	15,2
513-444-10E	103006	0,01-0,3	48	40	20,9	17,4

Metric — Full set

No.	Range	Graduation [mm]	Scale	MPE any 10 scale divisions [µm]	MPE any 1/2 revolution [µm]	MPE any 1 revolution [µm]	MPE measuring range [µm]	H MPE (Hysteresis) [µm]	R MPE (Repeatability) [µm]
513-445-10T	0,4	0,002	0-100-0	2	3	5	6	4	1
513-444-10T	1,6	0,01	0-40-0	5	8	10	16	4	3

No.	Carbide stylus tip ø2 mm No.	Measuring force [N]	Mass [g]	D Ø [mm]	L1 [mm]	L2 [mm]
513-445-10T	103011	0,01-0,3	48	40	18,7	15,2
513-444-10T	103006	0,01-0,3	48	40	20,9	17,4

All products to be sold to commercial customers.
Product illustrations are without obligation. Product descriptions, in particular any and all technical specifications, are only binding when explicitly agreed upon.

Mitutoyo

Lever Indicators Vertical Type

Series 513

This is a Dial Test Indicator (Lever Type) which offers you the following benefits:

- Drastically enhanced durability, sensitivity and visibility.
- Glare-free flat crystal face allows easy reading of graduations.
- O-ring seal on the bezel has the effect of providing smooth rotation and prevents dust and oil from penetrating through to the dial face.
- The stylus length is on the dial face to reorder a replacement
- Multi-layer coatings on the crystal.

513-455-10E

513-455-10E

513-454-10E

513-454-10E

Metric Basic set

No.	Range	Graduation [mm]	Scale	MPE any 10 scale divisions [µm]	MPE any 1/2 revolution [µm]	MPE measuring range [µm]	H MPE (Hysteresis) [µm]	R MPE (Repeatability) [µm]	Carbide stylus tip ø2 mm No.
513-455-10E	0,2	0,002	0-100-0	2	3	3	2	1	103011
513-456-10E	0,5	0,01	0-25-0	5		5	3	3	137557
513-454-10E	0,8	0,01	0-40-0	5	6	8	3	3	103006

No.	Mass [g]	D Ø [mm]	L1 [mm]	L2 [mm]
513-455-10E	46	40	18,7	15,2
513-456-10E	46	40	22,2	18,7
513-454-10E	46	40	20,9	17,4

Metric Full set

No.	Range	Graduation [mm]	Scale	MPE any 10 scale divisions [µm]	MPE any 1/2 revolution [µm]	MPE measuring range [µm]	H MPE (Hysteresis) [µm]	R MPE (Repeatability) [µm]	Carbide stylus tip ø2 mm No.
513-455-10T	0,2	0,002	0-100-0	2	3	3	2	1	103011
513-454-10T	0,8	0,01	0-40-0	5	6	8	3	3	103006

No.	Mass [g]	D Ø [mm]	L1 [mm]	L2 [mm]
513-455-10T	46	40	18,7	15,2
513-454-10T	46	40	20,9	17,4

Specifications

Contact point	Thread M 1,7 x 0,35

For optional accessories, see end of lever indicators section.

Optional accessories

No.	Description
21AAB363	Limit Hands (Green) 2 pcs., Dial Indicator Series 1, Test Indicator

Set Configuration: Metric

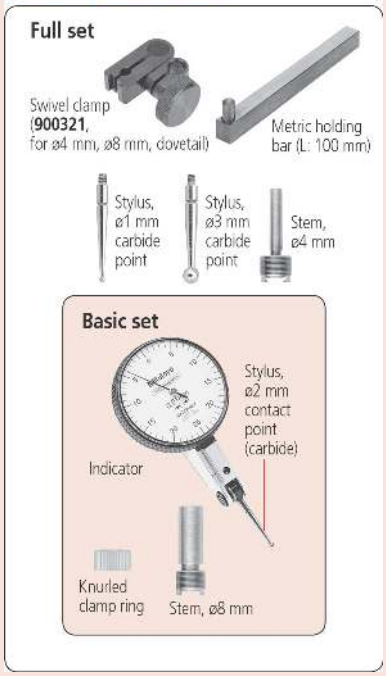

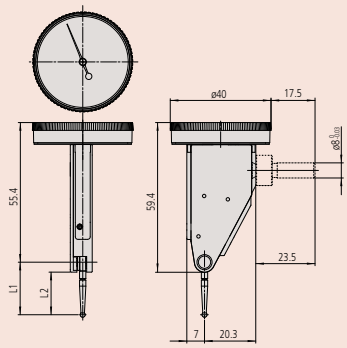

All products to be sold to commercial customers.
Product illustrations are without obligation. Product descriptions, in particular any and all technical specifications, are only binding when explicitly agreed upon.

Lever Indicators Parallel Type

Series 513

This is a Dial Test Indicator (Lever Type) which offers you the following benefits:

- Drastically enhanced durability, sensitivity and visibility.
- Glare-free flat crystal face allows easy reading of graduations.
- O-ring seal on the bezel has the effect of providing smooth rotation and prevents dust and oil from penetrating through to the dial face.
- The stylus length is on the dial face to reorder a replacement
- Multi-layer coatings on the crystal.

Specifications

Contact point	Thread M 1,7 x 0,35

For optional accessories, see end of lever indicators section.

Optional accessories

No.	Description
21AAB363	Limit Hands (Green) 2 pcs., Dial Indicator Series 1, Test Indicator

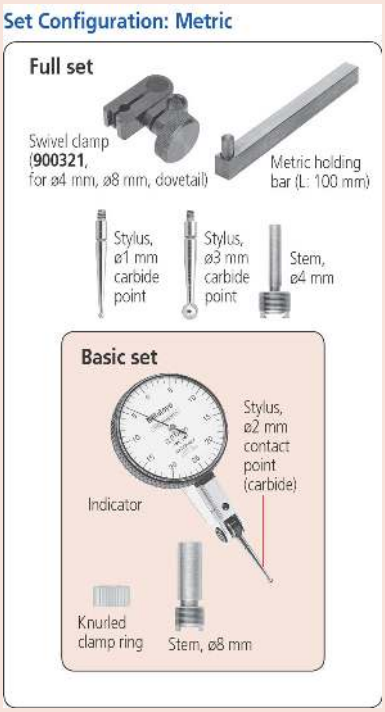

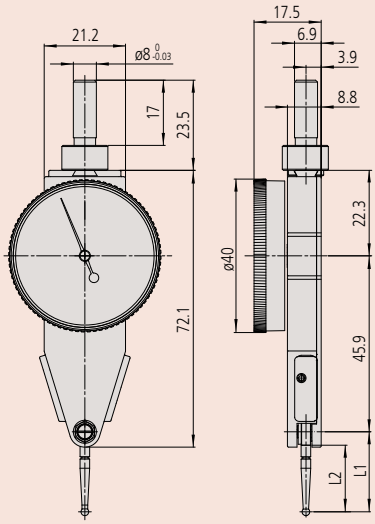

513-484-10E

513-485-10E

513-486-10E

513-484-10E

Metric Basic set

No.	Range	Graduation [mm]	Scale	MPE any 10 scale divisions [µm]	MPE any 1/2 revolution [µm]	MPE measuring range [µm]	H MPE (Hysteresis) [µm]	R MPE (Repeatability) [µm]
513-485-10E	0,2	0,002	0-100-0	2	3	3	2	1
513-486-10E	0,5	0,01	0-25-0	5		5	3	3
513-484-10E	0,8	0,01	0-40-0	5	6	8	3	3

No.	Carbide stylus tip ø2 mm No.	Measuring force [N]	Mass [g]	D Ø [mm]	L1 [mm]	L2 [mm]
513-485-10E	103011	0,01-0,3	53	40	18,7	15,2
513-486-10E	137557	0,01-0,3	53	40	22,2	18,7
513-484-10E	103006	0,01-0,3	53	40	20,9	17,4

Metric Full set

No.	Range	Graduation [mm]	Scale	MPE any 10 scale divisions [µm]	MPE any 1/2 revolution [µm]	MPE measuring range [µm]	H MPE (Hysteresis) [µm]	R MPE (Repeatability) [µm]
513-484-10T	0,8	0,01	0-40-0	5	6	8	3	3

No.	Carbide stylus tip ø2 mm No.	Measuring force [N]	Mass [g]	D Ø [mm]	L1 [mm]	L2 [mm]
513-484-10T	103006	0,01-0,3	53	40	20,9	17,4

All products to be sold to commercial customers.
Product illustrations are without obligation. Product descriptions, in particular any and all technical specifications, are only binding when explicitly agreed upon.

Lever Indicators Universal Type

Series 513

This is a Dial Test Indicator (Lever Type) which offers you the following benefits:

- Drastically enhanced durability, sensitivity and visibility.
- Glare-free flat crystal face allows easy reading of graduations.
- O-ring seal on the bezel has the effect of providing smooth rotation and prevents dust and oil from penetrating through to the dial face.
- The stylus length is on the dial face to reorder a replacement
- Multi-layer coatings on the crystal.

513-304-10E

Metric — Basic set

No.	Range	Graduation [mm]	Scale	MPE any 10 scale divisions [µm]	MPE any 1/2 revolution [µm]	MPE measuring range [µm]	H MPE (Hysteresis) [µm]	R MPE (Repeatability) [µm]
513-304-10E	0,8 - 0,8	0,01	0-40-0	5	6	8	4	3

No.	Carbide stylus tip ø2 mm No.	Measuring force [N]	Mass [g]	D Ø [mm]	L [mm]
513-304-10E	102825	0,01-0,3	80	40	24

Metric — Full set

No.	Range	Graduation [mm]	Scale	MPE any 10 scale divisions [µm]	MPE any 1/2 revolution [µm]	MPE measuring range [µm]	H MPE (Hysteresis) [µm]	R MPE (Repeatability) [µm]
513-304-10T	0,8 - 0,8	0,01	0-40-0	5	6	8	3	3

No.	Carbide stylus tip ø2 mm No.	Measuring force [N]	Mass [g]	D Ø [mm]	L [mm]
513-304-10T	102825	0,01-0,3	80	40	24

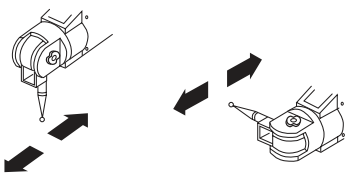

Stylus can be set at any angle while keeping the dial stationary

Specifications

Contact point	Thread M 1,4 x 0,3

For optional accessories, see end of lever indicators section.

Set Configuration: Metric

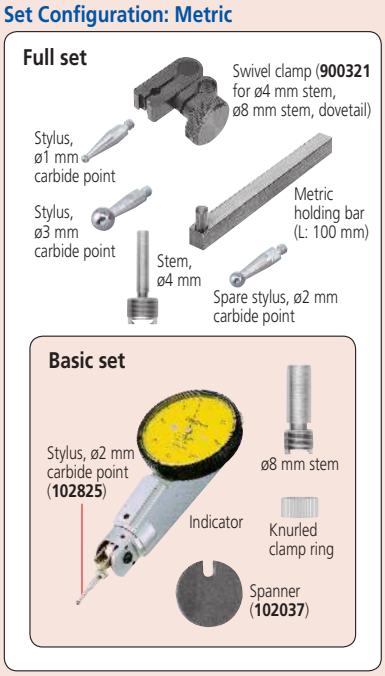

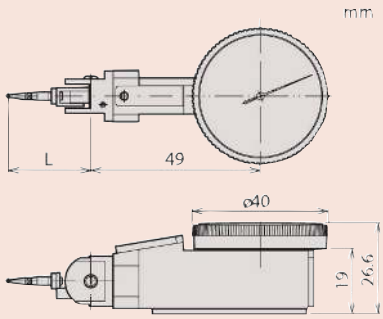

All products to be sold to commercial customers.
Product illustrations are without obligation. Product descriptions, in particular any and all technical specifications, are only binding when explicitly agreed upon.

Lever Indicators Small Type

Series 513

This is a small type Dial Test Indicator (Lever Type) which offers you the following benefits:

- Reversible measuring direction (clutch type)
- Jeweled bearings assure higher sensitivity and accuracy.

513-501-10E

513-514-10E

513-503-10E

513-517-10E

513-515-10E

Specifications

Contact point	Thread M 1,7 x 0,35

For optional accessories, see end of lever indicators section.

Optional accessories

No.	Description
900322	Swivel Clamp, for D=4/9,52mm, Dovetail

Set Configuration: Metric

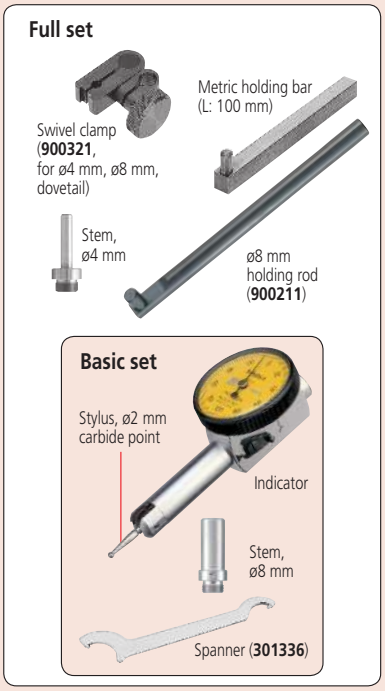

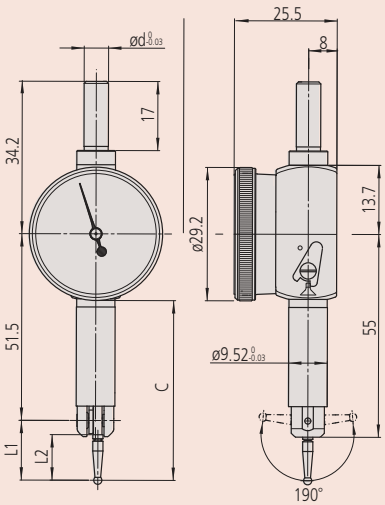

513-517-10E (full set)

Metric Basic set

No.	Range	Graduation [mm]	Scale	MPE any 10 scale divisions [µm]	MPE any 1/2 revolution [µm]	MPE measuring range [µm]	H MPE (Hysteresis) [µm]	R MPE (Repeatability) [µm]
513-501-10E	0,14	0,001	0-70-0	2	3	4	3	1
513-503-10E	0,2	0,002	0-100-0	2	3	4	3	1
513-514-10E	0,5	0,01	0-25-0	5		10	4	3
513-517-10E	0,8	0,01	0-40-0	5	6	8	3	3
513-515-10E	1	0,01	0-50-0	5	8	10	4	3

No.	Carbide stylus tip ø2 mm No.	Measuring force [N]	Mass [g]	D Ø [mm]	L1 [mm]	L2 [mm]	C [mm]
513-501-10E	136104	≤ 0,5	50	29,2	12,1	8,6	48,7
513-503-10E	103010	≤ 0,4	50	29,2	14,7	11,2	43,7
513-514-10E	131324	≤ 0,3	51	29,2	36,8	32,8	66,8
513-517-10E	103006	≤ 0,3	50	29,2	20,9	17,4	49,9
513-515-10E	136013	≤ 0,3	51	29,2	44,5	41	81,2

Metric Full set

No.	Range	Graduation [mm]	Scale	MPE any 10 scale divisions [µm]	MPE any 1/2 revolution [µm]	MPE measuring range [µm]	H MPE (Hysteresis) [µm]	R MPE (Repeatability) [µm]
513-501-10T	0,14	0,001	0-70-0	2	3	4	3	1
513-503-10T	0,2	0,002	0-100-0	2	3	4	3	1
513-514-10T	0,5	0,01	0-25-0	5		10	4	3
513-517-10T	0,8	0,01	0-40-0	5	6	8	3	3
513-515-10T	1	0,01	0-50-0	5	8	10	4	3

No.	Carbide stylus tip ø2 mm No.	Measuring force [N]	Mass [g]	D Ø [mm]	L1 [mm]	L2 [mm]	C [mm]
513-501-10T	136104	≤ 0,5	50	29,2	12,1	8,6	48,7
513-503-10T	103010	≤ 0,4	50	29,2	14,7	11,2	43,7
513-514-10T	131324	≤ 0,3	51	29,2	36,8	32,8	66,8
513-517-10T	103006	≤ 0,3	50	29,2	20,9	17,4	49,9
513-515-10T	136013	≤ 0,3	51	29,2	44,5	41	81,2

All products to be sold to commercial customers.
Product illustrations are without obligation. Product descriptions, in particular any and all technical specifications, are only binding when explicitly agreed upon.

Mitutoyo

Styli, Stems and Holders

Stylus length affects the scale factor of an indicator, and the styli provided to you as standard give a scale factor of unity.

ø 0,5 mm ball-point

ø 0,7 mm ball-point

ø 1 mm ball-point Carbide

ø 2 mm ball-point Carbide

ø 2 mm ball-point Ruby

ø 3 mm ball-point Carbide

No.	Standard models	Small type models	L2 [mm]	Ø ball point
190547	●	●	11,2	0,5 mm steel
190549	●	●	17,4	0,5 mm steel
190654	●		18,7	0,5 mm steel
190656	●	●	41	0,5 mm steel
190548	●	●	11,2	0,7 mm steel
190550	●	●	17,4	0,7 mm steel
190653	●		18,7	0,7 mm steel
190655	●	●	41	0,7 mm steel
136756		●	8,6	1 mm carbide
21CZA044	●		9,4	1 mm carbide
103017	●	●	11,2	1 mm carbide
131314	●		15,2	1 mm carbide
103013	●	●	17,4	1 mm carbide
21CZA098		●	17,4	1 mm carbide*3
137558	●		18,7	1 mm carbide
102824	●		6,5	1 mm carbide*2
137746	●	●	33,9	1 mm carbide
131316	●		33,9	1 mm carbide
136235	●	●	41	1 mm carbide
136104		●	8,6	2 mm carbide
21CZA036	●		9,4	2 mm carbide
103010	●	●	11,2	2 mm carbide
103011	●		15,2	2 mm carbide
103006	●	●	17,4	2 mm carbide
21CZA097		●	17,4	2 mm carbide*3
137557	●		18,7	2 mm carbide
102825	●		6,5	2 mm carbide*2
129949	●	●	33,9	2 mm carbide
131324	●		33,9	2 mm carbide
136013	●	●	41	2 mm carbide
21CZA212	●		9,4	2 mm ruby
21CZA209	●	●	11,2	2 mm ruby
21CZB068	●		15,2	2 mm ruby
21CZA201	●	●	17,4	2 mm ruby
21CZA210	●		18,7	2 mm ruby
21CZA211	●	●	41	2 mm ruby
136758		●	8,6	3 mm carbide
21CZA045	●		9,4	3 mm carbide
103018	●	●	11,2	3 mm carbide
131315	●		15,2	3 mm carbide
103014	●	●	17,4	3 mm carbide
21CZA099		●	17,4	3 mm carbide*3
137559	●		18,7	3 mm carbide
102826	●		6,5	3 mm carbide*2
137747	●	●	33,9	3 mm carbide
131317	●		33,9	3 mm carbide
136236	●	●	41	3 mm carbide

*2 : Used extension 209829 for 513-304-10E, 513-304-10T
*3 : For 513-517W models

Optional accessories

No.	Description
209829	Stylus Extension for Universal Type, Series 513

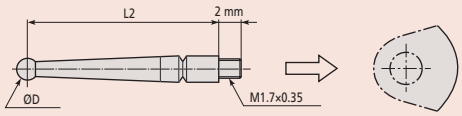

Styli for standard models

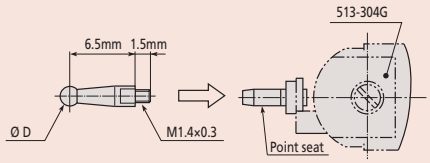

Syli for universal type
513-304-10E, 513-304-10T

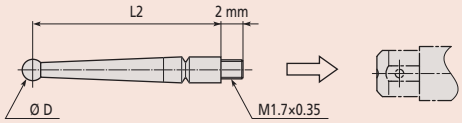

Styli for small type models

All products to be sold to commercial customers.
Product illustrations are without obligation. Product descriptions, in particular any and all technical specifications, are only binding when explicitly agreed upon.

Styli, Stems and Holders

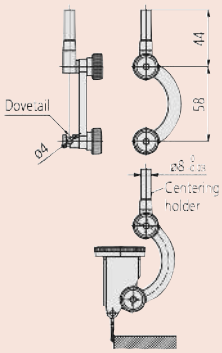

Centering Holder
901959

900211

Spanner 102037

Spanner 301336

190322

21CZB131

21CZB129

102822

102389

Universal Holder

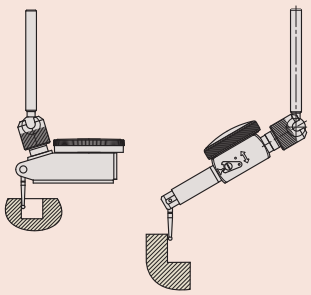

Universal holder with standard type (left)
Universal holder with small type (right)

Styli, Stems and Holders

Centering Holder

No.	Standard models	Stem Ø
901959	●	8 mm

Holding Bars

No.	Standard models	Small type models	Remarks	L [mm]
953638.	●	●	9 x 9 mm	50 mm
900209.	●	●	9 x 9 mm	100 mm
900211	●	●	ø 8 mm	115 mm

Spanner

No.	Standard models	Small type models
102037	●	
301336		●

Stems

No.	Standard models	Small type models	Stem Ø	Remarks
21CZB131	●		4 mm	Stem with knurled clamp ring
21CZB128	●		6 mm	Stem with knurled clamp ring
21CZB129	●		8 mm	Stem with knurled clamp ring
21CZB130	●		9,52 mm	Stem with knurled clamp ring
21CZB132	●		4 mm, 8 mm	2 stems with knurled clamp ring
21CZB133	●		4 mm, 9,52 mm	2 stems with knurled clamp ring
190322	●			Knurled clamp ring
21CAB106	●		4 mm	Stem
21CAB103	●		6 mm	Stem
21CAB104	●		8 mm	Stem
102036		●	4 mm	Stem
102389		●	6 mm	Stem
102822		●	8 mm	Stem

Swivel Clamps

No.	Standard models	Small type models	Remarks
900321	●	●	For ø 4, 8 mm stems and dovetail

Universal Holder

No.	Standard models	Small type models	Stem Ø
21CZA229	●		6 mm
21CZA233	●		8 mm
21CZA230		●	6 mm
21CZA234		●	8 mm

All products to be sold to commercial customers.
Product illustrations are without obligation. Product descriptions, in particular any and all technical specifications, are only binding when explicitly agreed upon.

Mitutoyo

ABSOLUTE Digimatic Thickness Gauges

Series 547

ABSOLUTE®

This ABSOLUTE Digimatic Thickness Gauge enables you to measure tube wall thickness.

547-360

Metric

No.	Range	Digital step	Accuracy	Indicator No.	Max. measuring depth	Measuring force [N]	Type	Mass [g]
547-360	0 - 10	0,01 mm	±20 µm	543-400BS (ID-C)	20 mm	≤ 1,5	Anvil D=3,5 mm, Contact point D=3 mm	240

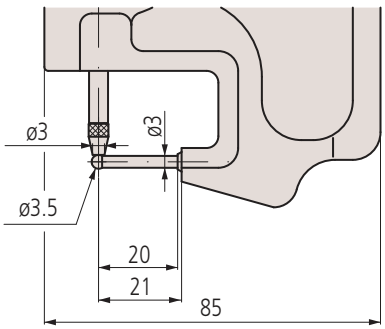

Functions	Series 547
DATA/HOLD	●
Digimatic data output	●
ON/OFF	●
ABS / INC (INC ZERO)	●
PRESET	●
Function lock	●
GO/±NG judgement	●
Calculation function (with formula)	●
Counting direction switchable	●

Specifications

Max. response speed	Unlimited
Alarm	Low voltage, counting value composition error, overflow error, tolerance limit setting error (only ID-C)
Power supply	1 battery SR-44
Battery life	Approx. 7000 hours

Optional accessories

No.	Description
905338	Digimatic Cable, Flat Straight Type, 1m
905409	Digimatic Cable, Flat Straight Type, 2m
06AFM380F	USB Input Tool Direct (Digimatic USB), Digi/Digi2, Flat Straight Type
02AZD880G	U-WAVE-T, Buzzer Type, Wireless Transmitter
02AZD730G	U-WAVE-T, IP67 Type, Wireless Transmitter
02AZD790F	U-WAVE-T Connection Cable F, Flat Straight Type

Consumable spares

No.	Description
938882	Battery SR44 1.5V
21EZA198	Spindle Lifting Lever, for Digital Indicator, A-Type Dial Indicator Series 2/3/4

All products to be sold to commercial customers.
Product illustrations are without obligation. Product descriptions, in particular any and all technical specifications, are only binding when explicitly agreed upon.

ABSOLUTE Digimatic Thickness Gauges

Series 547

ABSOLUTE®

This ABSOLUTE Digimatic Thickness Gauge enables you to measure film, paper, etc., with flat contact points.

Functions	Series 547
DATA/HOLD	●
Digimatic data output	●
ON/OFF	●
ABS / INC (INC ZERO)	●
PRESET	●
Function lock	●
GO/±NG judgement	●
Calculation function (with formula)	●
Counting direction switchable	●

Specifications

Max. response speed	Unlimited
Alarm	Low voltage, counting value composition error, overflow error, tolerance limit setting error (ID-C only)
Power supply	1 battery SR-44
Battery life	Approx. 7000 hours

Optional accessories

No.	Description
905338	Digimatic Cable, Flat Straight Type, 1m
905409	Digimatic Cable, Flat Straight Type, 2m
06AFM380F	USB Input Tool Direct (Digimatic USB), Digi/Digi2, Flat Straight Type
02AZD880G	U-WAVE-T, Buzzer Type, Wireless Transmitter
02AZD730G	U-WAVE-T, IP67 Type, Wireless Transmitter
02AZD790F	U-WAVE-T Connection Cable F, Flat Straight Type

Consumable spares

No.	Description
938882	Battery SR44 1.5V
21EZA198	Spindle Lifting Lever, for Digital Indicator, A-Type Dial Indicator Series 2/3/4

547-321

547-301

547-313

547-315

Metric

No.	Range	Digital step	Accuracy	Parallelism	Indicator No.	Max. measuring depth	Measuring force [N]	Type	Mass [g]
547-301	0-10 mm	0,01 mm	±20 µm	10 µm	543-400BS (ID-C)	30 mm	≤ 1,5	Ceramic disc contact points	255
547-321	0-10 mm	0,01 mm	±20 µm	10 µm	543-400BS (ID-C)	120 mm	≤ 1,5	Ceramic disc contact points and large jaw capacity	425
547-313	0-10 mm	0,01 mm	±20 µm	10 µm	543-400BS (ID-C)	30 mm	≤ 1,5	Adjustable anvil	275
547-315	0-10 mm	0,01 mm	±20 µm	10 µm	543-400BS (ID-C)	30 mm	≤ 1,5	Blade steel contact point	270

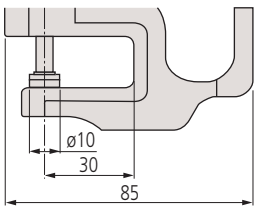

547-301

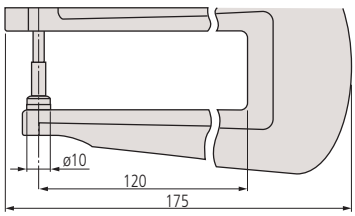

547-321

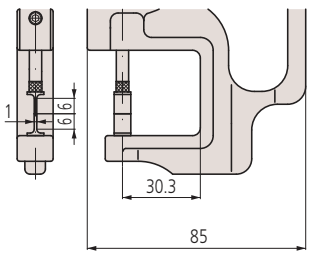

547-315

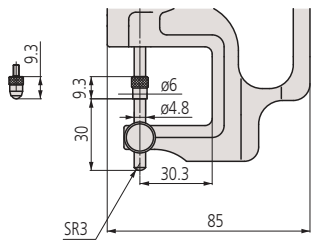

547-313

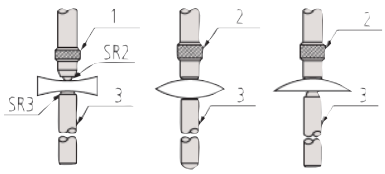

Concave lens | Convex lens | Plano-convex lens

1: Ballpoint; 2: Flatpoint; 3: Anvil

(only for 547-313)

All products to be sold to commercial customers.
Product illustrations are without obligation. Product descriptions, in particular any and all technical specifications, are only binding when explicitly agreed upon.

Mitutoyo

ABSOLUTE Digimatic Thickness Gauges

Series 547

ABSOLUTE®

This ABSOLUTE Digimatic Thickness Gauge with 1 µm digital step enables you to measure film, paper, etc., with flat contact points.

547-401

Metric

No.	Range	Digital step	Accuracy	Parallelism	Indicator No.	Max. measuring depth	Measuring force [N]	Type	Mass [g]
547-401	0 - 12	0,01 mm/ 0,001 mm	±3 µm	3 µm	543-390BS (ID-C)	21 mm	≤ 3,5	D=6,3 mm, carbide tipped	290

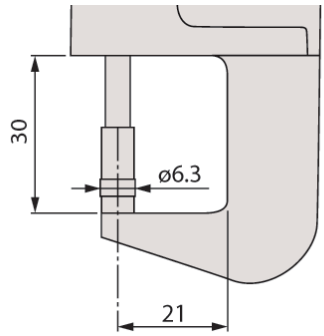

Functions	Series 547
DATA/HOLD	●
Digimatic data output	●
ON/OFF	●
ABS / INC (INC ZERO)	●
PRESET	●
Function lock	●
GO/±NG judgement	●
Calculation function (with formula)	●
Counting direction switchable	●

Specifications

Alarm	Low voltage, counting value composition error, overflow error, tolerance limit setting error
Power supply	1 battery SR-44
Battery life	Approx. 7000 hours

Optional accessories

No.	Description
905338	Digimatic Cable, Flat Straight Type, 1m
905409	Digimatic Cable, Flat Straight Type, 2m
06AFM380F	USB Input Tool Direct (Digimatic USB), Digi/Digi2, Flat Straight Type
02AZD880G	U-WAVE-T, Buzzer Type, Wireless Transmitter
02AZD730G	U-WAVE-T, IP67 Type, Wireless Transmitter
02AZD790F	U-WAVE-T Connection Cable F, Flat Straight Type
156-101-10	Micrometer Stand, Adjustable Angle Type, for Micrometer 0-100mm/0-4"

Consumable spares

No.	Description
938882	Battery SR44 1.5V
21EZA198	Spindle Lifting Lever, for Digital Indicator, A-Type Dial Indicator Series 2/3/4

Quick Mini Thickness Gauges

Series 700

ABSOLUTE®

This is a lightweight, palm-sized thickness gauge.

700-119-30

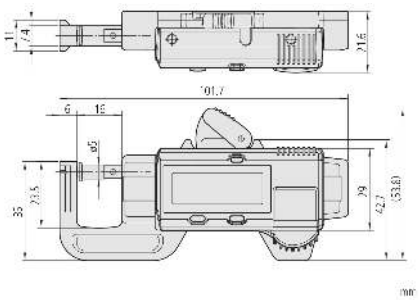

No.	Range	Digital step	Accuracy	Measuring force [N]	Mass [g]
700-119-30	0 - 12	0,01 mm	±0,02 mm (excluding quantizing error)	2	70

Functions	Series 700
ON/OFF	●
ABS / INC (INC ZERO)	●

Specifications

Display	LCD, character height 9 mm
Power supply	1 Battery SR-44
Battery life	Approx. 5 years

Consumable spares

No.	Description
938882	Battery SR44 1.5V

All products to be sold to commercial customers.
Product illustrations are without obligation. Product descriptions, in particular any and all technical specifications, are only binding when explicitly agreed upon.

Dial Indicator Thickness Gauges

Series 7

This Dial Indicator Thickness Gauge enables you to measure tube wall thickness, film/paper etc. with flat contact points, resp. lens thickness or groove depth.

7313A

7327A

7315A

7321A

7360A

Optional accessories

No.	Description
21AZB195	Limit Hands (green) 2pcs, Dial Indicator Series 2/3/4
21AZB148	Bezel Clamp for Dial Gauge, Metric, Series 2/3/4

Consumable spares

No.	Description
21AZB149	Spindle Lifting Lever, for S-Type Series 2,3,4 up to 10mm/0,4"
21AZB150	Spindle Lifting Lever, for S-Type Series 2,3 >10/0,4" up to 20mm/0,8"

21AZB149 : for 7301A/7327A/7321A/7313A/7315A/7360A
21AZB150 : for 7305A/7323A

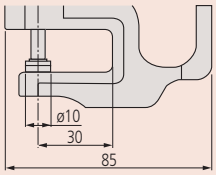

7327A / 7301A / 7305A

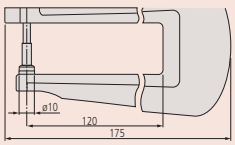

7321A / 7323A

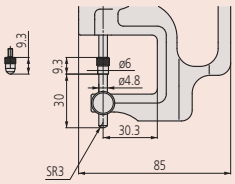

7313A

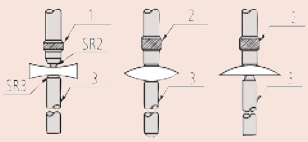

Concave lens; Convex lens; Plano-convex lens
1: Ballpoint; 2: Flatpoint; 3: Anvil

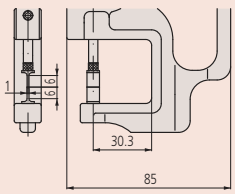

7315A

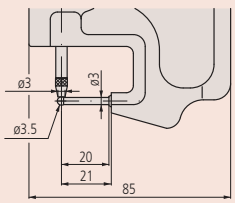

7360A

Metric Adjustable Anvil

No.	Range	Graduation [mm]	Accuracy	Parallelism	Indicator No.	Max. measuring depth	Measuring force [N]	Mass [g]
7313A	0 - 10	0,01	±0,015 mm	5 µm	2046AB	30 mm	≤ 1,4	215

Metric Ceramic disc contact points

No.	Range	Graduation [mm]	Accuracy	Parallelism	Indicator No.	Max. measuring depth	Measuring force [N]	Mass [g]
7327A	0 - 1	0,001	±0,005 mm	5 µm	2109AB-10	30 mm	≤ 1,5	225
7301A	0 - 10	0,01	±0,015 mm	5 µm	2046AB	30 mm	≤ 1,4	205
7305A	0 - 20	0,01	±0,02 mm	5 µm	2050AB	30 mm	≤ 2	220

Metric Knife-edge contact point

No.	Range	Graduation [mm]	Accuracy	Parallelism	Indicator No.	Max. measuring depth	Measuring force [N]	Mass [g]
7315A	0 - 10	0,01	±0,015 mm	5 µm	2046AB	30 mm	≤ 1,4	220

Metric Large jaw capacity and ceramic disc contact points

No.	Range	Graduation [mm]	Accuracy	Parallelism	Indicator No.	Max. measuring depth	Measuring force [N]	Mass [g]
7321A	0 - 10	0,01	±0,015 mm	5 µm	2046AB	120 mm	≤ 1,4	355
7323A	0 - 20	0,01	±0,022 mm	5 µm	2050AB	120 mm	≤ 2	355

Metric Tube thicknesses - Minimum inside diameter 3,5 mm

No.	Range	Graduation [mm]	Accuracy	Indicator No.	Max. measuring depth	Measuring force [N]	Mass [g]
7360A	0 - 10	0,01	±0,015 mm	2046AB	20 mm	≤ 1,4	200

All products to be sold to commercial customers.
Product illustrations are without obligation. Product descriptions, in particular any and all technical specifications, are only binding when explicitly agreed upon.

Mitutoyo

Internal Dial Caliper Gauges

Internal Dial Caliper Gauges Metric

This analog Internal Dial Caliper Gauge offers you the following benefits:

- Excellent resistance against water and dust (IP65 protection level)
- Optimized measuring force
- Ergonomically designed to lie securely in your hand when measuring

209-901

Metric — Measuring contacts: carbide ball Ø 0,6 mm

No.	Range	Graduation [mm]	Accuracy	Measuring force [N]	Type	Mass [g]	A [mm]	B [mm]	L [mm]
209-301	5 - 15	0,005	0,015 mm	0,8-1,2 N	Fig. 4	160	2,3	0,8	35

Metric — Measuring contacts: carbide ball Ø 1,5 mm

No.	Range	Graduation [mm]	Accuracy	Measuring force [N]	Type	Mass [g]	A [mm]	B [mm]	L [mm]
209-901	15 - 65	0,05	0,05 mm	0,9-1,9 N	Fig. 4	355	5,5	1,9	188

Metric — Measuring contacts: carbide ball Ø 1 mm

No.	Range	Graduation [mm]	Accuracy	Measuring force [N]	Type	Mass [g]	A [mm]	B [mm]	L [mm]
209-302	10 - 30	0,01	0,03 mm	1,1-1,6 N	Fig. 4	180	5,2	1,2	85
209-303	20 - 40	0,01	0,03 mm	1,1-1,6 N	Fig. 2	180	7	1,2	85
209-304	30 - 50	0,01	0,03 mm	1,1-1,6 N	Fig. 2	185	7	1,2	85
209-305	40 - 60	0,01	0,03 mm	1,1-1,6 N	Fig. 3	195	8,3	1,2	85
209-306	50 - 70	0,01	0,03 mm	1,1-1,6 N	Fig. 3	195	8,3	1,2	85
209-307	60 - 80	0,01	0,03 mm	1,1-1,6 N	Fig. 3	200	8,3	1,2	85
209-308	70 - 90	0,01	0,03 mm	1,1-1,6 N	Fig. 3	200	8,3	1,2	85
209-309	80 - 100	0,01	0,03 mm	1,1-1,6 N	Fig. 3	200	8,3	1,2	85

Metric — Measuring contacts: carbide ball Ø 2 mm

No.	Range	Graduation [mm]	Accuracy	Measuring force [N]	Type	Mass [g]	A [mm]	B [mm]	L [mm]
209-902	40 - 90	0,05	0,05 mm	0,9-1,9 N	Fig. 3	370	8,3	2,4	192
209-903	70 - 120	0,05	0,05 mm	0,9-1,9 N	Fig. 3	380	8,3	2,4	192

Metric — Measuring contacts: carbide bevel (R: 0,1 mm)

No.	Range	Graduation [mm]	Accuracy	Measuring force [N]	Type	Mass [g]	A [mm]	B [mm]	L [mm]
209-300	2,5 - 12,5	0,005	0,015 mm	0,8-1,2 N	Fig. 1	155	0,7	0,4	12

Metric — Measuring contacts: interchangeable, carbide ball Ø 1 mm

No.	Range	Graduation [mm]	Accuracy	Measuring force [N]	Type	Mass [g]	A [mm]	B [mm]	L [mm]
209-310	50 - 100	0,01	0,03 mm	1,1-1,6 N	Fig. 5	220	8,3	1,2	85
209-311	90 - 140	0,01	0,03 mm	1,1-1,6 N	Fig. 5	230	8,3	1,2	85
209-312	130 - 180	0,01	0,03 mm	1,1-1,6 N	Fig. 5	230	8,3	1,2	85

Figure 1

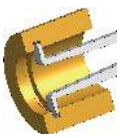

Figure 2

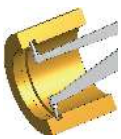

Figure 3

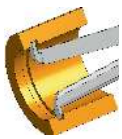

Figure 4

Figure 5

Optional accessories

No.	Description
63AAA437	Holder for Digital Caliper Gauge, for 209-901 up to 209-924
011530	Holder for Digital Caliper Gauge, for 209-300 up to 209-457 except: 209-310, -311, -312, -361, -362, -363

209-301

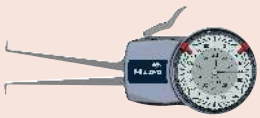

209-303

209-305

209-902

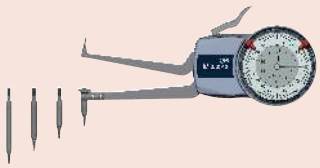

209-310

209-300

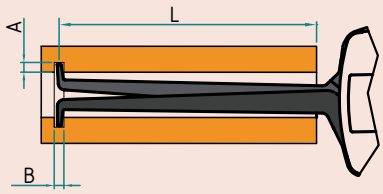

L=Maximum reach of contact arms over workpiece
A=Maximum groove depth
B=Minimum groove width

63AAA437

All products to be sold to commercial customers.
Product illustrations are without obligation. Product descriptions, in particular any and all technical specifications, are only binding when explicitly agreed upon.

Internal Digimatic Caliper Gauges

Series 209

- Digital Caliper Gauge enables measurements in hard-to-reach places
- Excellent resistance against water and dust IP67 level

Functions	Series 209
Analog bar resolution switchable	●
Auto Power OFF after 1/5/10 min. non use	●
OFFSET	●
mm/inch conversion	●
HOLD	●
SET key	●
DATA key	●
DATA-Logger (100 measured values)	●
ABS/INC switchable	●
Max. reading	●
Min. reading	●
Tolerance LED (green/red)	●
Tolerance judgement	●

Specifications

Digital step	0,001 / 0,002 / 0,005 / 0,01 / 0,02 / 0,05 mm
Power supply	2 batteries LR3 (AAA)

Optional accessories

No.	Description
011551	Digimatic Interface Series 209, Digital Caliper Gauge
937387	Digimatic Cable, Round 6-Pin Type, 1m
965013	Digimatic Cable, Round 6-Pin Type, 2m
06AFM380E	USB Input Tool Direct (Digimatic USB), Digi/Digi2, Round 6-Pin Type
02AZD880G	U-WAVE-T, Buzzer Type, Wireless Transmitter
02AZD730G	U-WAVE-T, IP67 Type, Wireless Transmitter
02AZD790E	U-WAVE-T Connection Cable E, Round 6-Pin Type
63AAA438	Holder for Digital Caliper Gauge, for 209-930 up to 209-958

Consumable spares

No.	Description
011511-1	Battery LR03 (AAA), 4x

209-935

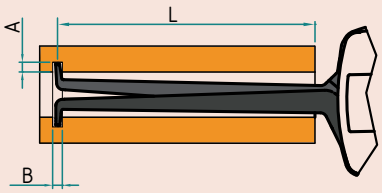

L=Maximum reach of contact arms over workpiece
A=Maximum groove depth
B=Minimum groove width

63AAA438

209-945

Measuring contacts: carbide ball Ø 0,6 mm

No.	Range	Accuracy	Measuring force [N]	Type	Protection	Mass [g]	A [mm]	B [mm]	L [mm]
209-935	5 - 15 mm	0,015 mm	0,8-1,2	Fig. 4	IP67	260	2,3	0,8	35

Measuring contacts: carbide ball Ø 1,3 mm

No.	Range	Accuracy	Measuring force [N]	Type	Protection	Mass [g]	A [mm]	B [mm]	L [mm]
209-944	13 - 43 mm	0,04 mm	1,2-1,7	Fig. 4	IP67	360	5,7	1,5	127

Measuring contacts: carbide ball Ø 1,5 mm

No.	Range	Accuracy	Measuring force [N]	Type	Protection	Mass [g]	A [mm]	B [mm]	L [mm]
209-945	15 - 65 mm	0,05 mm	1-1,8	Fig. 2	IP67	415	5,5	1,9	188
209-946	30 - 60 mm	0,04 mm	1,2-1,7	Fig. 3	IP67	370	6,2	1,8	132

Measuring contacts: carbide ball Ø 1 mm

No.	Range	Accuracy	Measuring force [N]	Type	Protection	Mass [g]	A [mm]	B [mm]	L [mm]
209-936	10 - 30 mm	0,03 mm	1,1-1,6	Fig. 4	IP67	270	5,2	1,2	85
209-937	20 - 40 mm	0,03 mm	1,1-1,6	Fig. 2	IP67	270	7	1,2	85
209-938	30 - 50 mm	0,03 mm	1,1-1,6	Fig. 2	IP67	275	7	1,2	85
209-939	40 - 60 mm	0,03 mm	1,1-1,6	Fig. 3	IP67	285	8,3	1,2	85
209-940	50 - 70 mm	0,03 mm	1,1-1,6	Fig. 3	IP67	285	8,3	1,2	85
209-941	60 - 80 mm	0,03 mm	1,1-1,6	Fig. 3	IP67	290	8,3	1,2	85
209-942	70 - 90 mm	0,03 mm	1,1-1,6	Fig. 3	IP67	290	8,3	1,2	85

Measuring contacts: carbide ball Ø 2 mm

No.	Range	Accuracy	Measuring force [N]	Type	Protection	Mass [g]	A [mm]	B [mm]	L [mm]
209-947	50 - 80 mm	0,04 mm	1,2-1,7	Fig. 3	IP67	370	8,3	2,4	132
209-948	70 - 100 mm	0,04 mm	1,2-1,7	Fig. 3	IP67	375	8,3	2,4	132
209-949	90 - 120 mm	0,04 mm	1,2-1,7	Fig. 3	IP67	380	8,3	2,4	132
209-950	40 - 90 mm	0,05 mm	1-1,8	Fig. 3	IP67	420	8,3	2,4	192

Measuring contacts: carbide bevel (R = 0,1 mm)

No.	Range	Accuracy	Measuring force [N]	Type	Protection	Mass [g]	A [mm]	B [mm]	L [mm]
209-934	2,5 - 12,5 mm	0,03 mm	0,8-1,2	Fig. 1	IP67	245	0,7	0,4	12

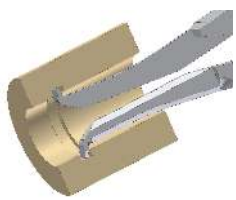

Figure 1

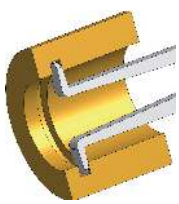

Figure 2

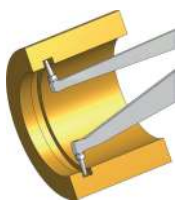

Figure 3

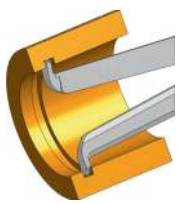

Figure 4

All products to be sold to commercial customers.
Product illustrations are without obligation. Product descriptions, in particular any and all technical specifications, are only binding when explicitly agreed upon.

External Dial Caliper Gauges

External Dial Caliper Gauges Metric

This analog External Dial Caliper Gauge offers you the following benefits:
- Excellent resistance against water and dust (IP65 protection level)
- Optimized measuring force
- Ergonomically designed to lie securely in your hand when measuring

209-405

Metric

Measuring contacts: bevel radius 0,4 mm (209-405), 0,75 mm (209-921)

No.	Range	Graduation [mm]	Accuracy	Measuring force [N]	Type	Mass [g]	Hb [mm]	Hf [mm]	L [mm]
209-405	0 - 20	0,01	0,03 mm	1,1-1,6	Fig. 1	210	24,6	24,6	85
209-921	0 - 50	0,05	0,05 mm	0,8-1,7	Fig. 1	430	30	30	167

Metric

Measuring contacts: carbide ball Ø 1,5 mm, Ø 3 mm (209-911)

No.	Range	Graduation [mm]	Accuracy	Measuring force [N]	Type	Mass [g]	Hb [mm]	Hf [mm]	L [mm]
209-400	0 - 10	0,005	0,015 mm	0,8-1,2	Fig. 4	165	19,1	0,9	35
209-402	0 - 10	0,005	0,015 mm	0,8-1,2	Fig. 2	170	19,1	18,6	35
209-404	0 - 20	0,01	0,03 mm	1,1-1,6	Fig. 2	210	24,7	24,6	85
209-407	0 - 20	0,01	0,03 mm	1,1-1,6	Fig. 4	200	24,7	2,5	85
209-911	0 - 50	0,05	0,05 mm	0,8-1,7	Fig. 2	430	30	30	167

Metric

Measuring contacts: carbide ball Ø 1,5 mm / bevel radius 0,4 mm

No.	Range	Graduation [mm]	Accuracy	Measuring force [N]	Type	Mass [g]	Hb [mm]	Hf [mm]	L [mm]
209-401	0 - 10	0,005	0,015 mm	0,8-1,2	Fig. 6	165	18,8	0,9	35
209-406	0 - 20	0,01	0,03 mm	1,1-1,6	Fig. 3	200	24,7	2,5	80

Metric

Measuring contacts: carbide ball Ø 3 mm/ carbide ball Ø 3 mm, bevel radius 0,75 mm (209-922)

No.	Range	Graduation [mm]	Accuracy	Measuring force [N]	Type	Mass [g]	Hb [mm]	Hf [mm]	L [mm]
209-912	0 - 50	0,05	0,05 mm	0,8-1,7	Fig. 4	400	30	4,6	169
209-922	0 - 50	0,05	0,05 mm	0,8-1,7	Fig. 3	400	30	4,6	169

Metric

Measuring contacts: disk measuring faces Ø 6 mm

No.	Range	Graduation [mm]	Accuracy	Measuring force [N]	Type	Mass [g]	Hb [mm]	Hf [mm]	L [mm]
209-403	0 - 10	0,005	0,02 mm	0,8-1,2	Fig. 5	175	21,7	14,8	36

Figure 1

Figure 2

Figure 3

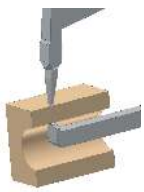

Figure 4

Figure 5

Figure 6

Optional accessories

No.	Description
63AAA437	Holder for Digital Caliper Gauge, for 209-901 up to 209-924
011530	Holder for Digital Caliper Gauge, for 209-300 up to 209-457 except: 209-310, -311, -312, -361, -362, -363

209-402

209-401

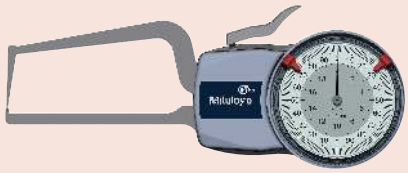

209-406

209-403

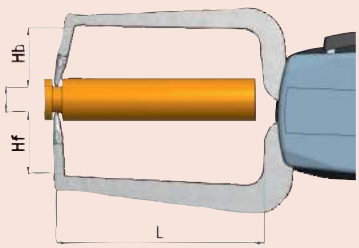

Figures 1/2/5

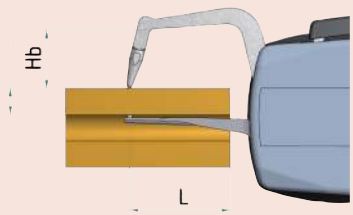

Figures 3/4/6
L=Maximum reach of contact arms over workpiece
Hb=Maximum penetration depth of upper contact
Hf=Maximum penetration depth of lower contact

All products to be sold to commercial customers.
Product illustrations are without obligation. Product descriptions, in particular any and all technical specifications, are only binding when explicitly agreed upon.

External Digimatic Caliper Gauges

Series 209

- Digital Caliper Gauge enables measurements in hard-to-reach places
- Excellent resistance against water and dust IP67 level

Functions	Series 209
Analog bar resolution switchable	●
Auto Power OFF after 1/5/10 min. non use	●
OFFSET	●
mm/inch conversion	●
HOLD	●
SET key	●
DATA key	●
DATA-Logger (100 measured values)	●
ABS/INC switchable	●
Max. reading	●
Min. reading	●
Tolerance LED (green/red)	●
Tolerance judgement	●

Specifications

Digital step	0,001 / 0,002 / 0,005 / 0,01 / 0,02 / 0,05 mm
Power supply	2 batteries LR3 (AAA)

Optional accessories

No.	Description
011551	Digimatic Interface Series 209, Digital Caliper Gauge
937387	Digimatic Cable, Round 6-Pin Type, 1m
965013	Digimatic Cable, Round 6-Pin Type, 2m
06AFM380E	USB Input Tool Direct (Digimatic USB), Digi/Digi2, Round 6-Pin Type
02AZD880G	U-WAVE-T, Buzzer Type, Wireless Transmitter
02AZD730G	U-WAVE-T, IP67 Type, Wireless Transmitter
02AZD790E	U-WAVE-T Connection Cable E, Round 6-Pin Type
63AAA438	Holder for Digital Caliper Gauge, for 209-930 up to 209-958
63AAA437	Holder for Digital Caliper Gauge, for 209-901 up to 209-924

Consumable spares

No.	Description
011511-1	Battery LR03 (AAA), 4x

209-931

209-953

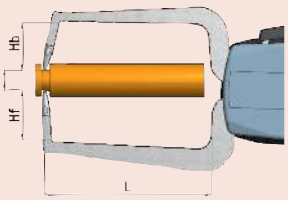

L=Maximum reach of contact arms over workpiece
Hb=Maximum penetration depth of upper contact
Hf=Maximum penetration depth of lower contact

209-930

209-933

209-951

209-952

Metric/Inch Bevel radius 0,75 / carbide ball ø3 mm + bevel radius 0,75 (209-958)

No.	Range	Accuracy	Measuring force [N]	Protection	Type	Mass [g]	Hb [mm]	Hf [mm]	L [mm]
209-957	0 - 50	0,06 mm	0,8-1,7	IP67	Fig. 5	490	30	30	167
209-958	0 - 50	0,06 mm	0,8-1,7	IP67	Fig. 6	460	30	4,3	169

Metric/Inch Measuring contacts: carbide ball Ø 1,5 mm

No.	Range	Accuracy	Measuring force [N]	Protection	Type	Mass [g]	Hb [mm]	Hf [mm]	L [mm]
209-930	0 - 10	0,015 mm	0,8-1,2	IP67	Fig. 1	240	19,1	18,6	36
209-932	0 - 20	0,03 mm	1,1-1,6	IP67	Fig. 1	270	24,7	24,6	81
209-943	0 - 10	0,015 mm	0,8-1,2	IP67	Fig. 2	255	19,1	9	36
209-933	0 - 20	0,03 mm	1,1-1,6	IP67	Fig. 2	430	24,7	2,5	86

Metric/Inch Measuring contacts: carbide ball Ø 3 mm

No.	Range	Accuracy	Measuring force [N]	Protection	Type	Mass [g]	Hb [mm]	Hf [mm]	L [mm]
209-951	0 - 30	0,04 mm	0,9-1,6	IP67	Fig. 1	430	30	30	114
209-952	0 - 30	0,04 mm	0,9-1,6	IP67	Fig. 2	410	30	4	116
209-954	0 - 50	0,05 mm	0,8-1,7	IP67	Fig. 1	490	30	30	167
209-955	0 - 50	0,05 mm	0,8-1,7	IP67	Fig. 2	460	30	4,3	169

Metric/Inch Measuring contacts: disk measuring faces Ø 50 mm

No.	Range	Accuracy	Measuring force [N]	Protection	Type	Mass [g]	Hb [mm]	Hf [mm]	L [mm]
209-953	0 - 30	0,06 mm	0,9-1,6	IP67	Fig. 4	430	36	24	116
209-956	0 - 50	0,06 mm	0,8-1,7	IP67	Fig. 4	500	36	24	167

Metric/Inch Measuring contacts: disk measuring faces Ø 6 mm

No.	Range	Accuracy	Measuring force [N]	Protection	Type	Mass [g]	Hb [mm]	Hf [mm]	L [mm]
209-931	0 - 10	0,02 mm	0,8-1,2	IP67	Fig. 3	245	21,7	14,8	36

Figure 1

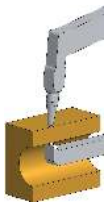

Figure 2

Figure 3

Figure 4

Figure 5

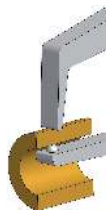

Figure 6

All products to be sold to commercial customers.
Product illustrations are without obligation. Product descriptions, in particular any and all technical specifications, are only binding when explicitly agreed upon.

Mitutoyo

Internal / External Digimatic Caliper Gauges
Power Supply: Wireless Charging

Series 209

209-927

209-928

209-929

209-925

209-926

Metric/Inch 1. Measuring contacts: carbide R = 0,12 mm

No.	Range	Accuracy	Measuring force [N]	Type	Mass [g]	A [mm]	B [mm]	B [mm]	L [mm]
209-927	2,5 - 12,5	0,01 mm	0,8-1,3	Fig. 4	160	0,7	0,6	0,6	12

Metric/Inch 2. Measuring contacts: carbide ball Ø 0,6 mm

No.	Range	Accuracy	Measuring force [N]	Type	Mass [g]	A [mm]	B [mm]	B [mm]	L [mm]
209-928	5 - 20	0,01 mm	0,8-1,3	Fig. 3	160	2,2	0,8	0,8	44

Metric/Inch 3. Measuring contacts: carbide ball Ø 1 mm

No.	Range	Accuracy	Measuring force [N]	Type	Mass [g]	A [mm]	B [mm]	B [mm]	L [mm]
209-929	10 - 25	0,01 mm	0,8-1,3	Fig. 3	160	4	1,5	1,5	46

Metric/Inch 4. Measuring contacts: carbide ball Ø 1,5 mm

No.	Range	Accuracy	Measuring force [N]	Type	Mass [g]	Hb [mm]	Hf [mm]	L [mm]
209-925	0 - 15	0,01 mm	1,3-1,5	Fig. 2	170	17	17	45

Metric/Inch 5. Measuring contacts: carbide R = 0,4 mm

No.	Range	Accuracy	Measuring force [N]	Type	Mass [g]	Hb [mm]	Hf [mm]	L [mm]
209-926	0 - 15	0,015 mm	1,3-1,5	Fig. 1	170	12	12	45

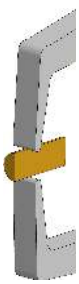
Figure 1

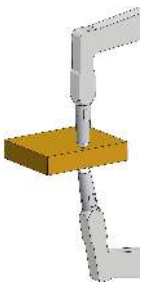
Figure 2

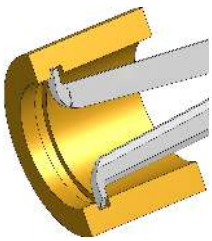
Figure 3

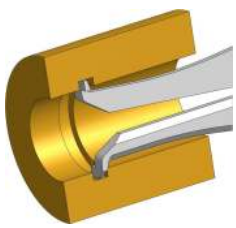
Figure 4

Functions	Series 209
Analog bar resolution switchable	●
Auto Power OFF after 1/5/10 min. non use	●
OFFSET	●
mm/inch conversion	●
HOLD	●
SET key	●
DATA key	●
DATA-Logger (100 measured values)	●
ABS/INC switchable	●
Max. reading	●
Min. reading	●
Tolerance LED (green/red)	●
Tolerance judgement	●

Specifications

Digital step	0,001 / 0,002 / 0,005 / 0,01 mm
Power supply	Lithium-Polymer power pack

Optional accessories

No.	Description
63AAA158	Digimatic Interface Adapter, Series 209
937387	Digimatic Cable, Round 6-Pin Type, 1m
965013	Digimatic Cable, Round 6-Pin Type, 2m
06AFM380E	USB Input Tool Direct (Digimatic USB), Digi/Digi2, Round 6-Pin Type
02AZD880G	U-WAVE-T, Buzzer Type, Wireless Transmitter
02AZD730G	U-WAVE-T, IP67 Type, Wireless Transmitter
02AZD790E	U-WAVE-T Connection Cable E, Round 6-Pin Type
63AAA439	Holder for Digital Caliper Gauge, for 209-925 up to 209-929

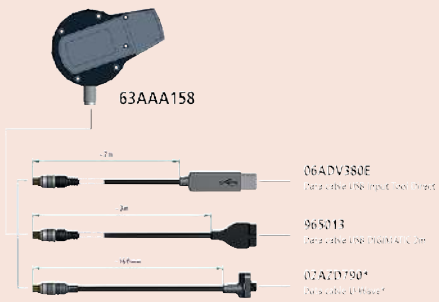

63AAA158

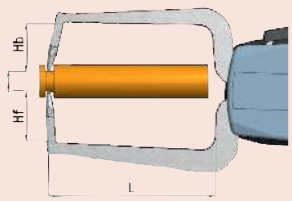

L=Maximum reach of contact arms over workpiece
Hb=Maximum penetration depth of upper contact
Hf=Maximum penetration depth of lower contact

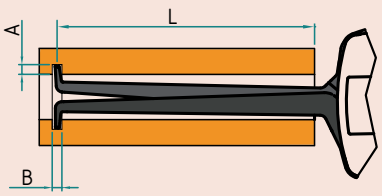

L=Maximum reach of contact arms over workpiece
A=Maximum groove depth
B=Minimum groove width

All products to be sold to commercial customers.
Product illustrations are without obligation. Product descriptions, in particular any and all technical specifications, are only binding when explicitly agreed upon.

Dial Tension Gauges

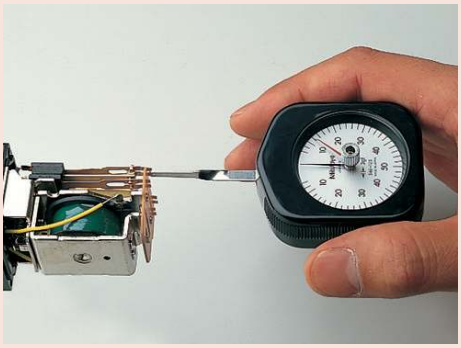

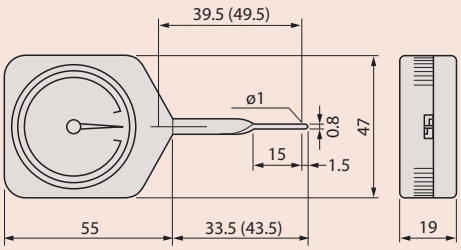

Dimensions in brackets refer to No. 546-112, 546-113, 546-133

Series 546

This Dial Tension Gauge has a range of applications, offering you the following benefits:

- You can set micro switches, relay springs and valves.
- It enables you testing the measuring force of dial indicators.
- You can also use it for adjusting tension and compression springs.
- A divided dial plate allows you to make measurements in both directions.

546-112

546-137

Peak Hold

No.	Range	Graduation	Accuracy	Mass [g]
546-133	10 - 100 mN	5 mN	½ graduation	56
546-134	30 - 300 mN	10 mN	½ graduation	56
546-135	0,06 - 0,5 N	0,02 N	½ graduation	56
546-136	0,1 - 1 N	0,05 N	½ graduation	56
546-137	0,15 - 1,5 N	0,05 N	½ graduation	56
546-138	0,3 - 3 N	0,1 N	½ graduation	56
546-139	0,6 - 5 N	0,2 N	½ graduation	56

Standard

No.	Range	Graduation	Accuracy	Mass [g]
546-112	6 - 50 mN	2 mN	½ graduation	56
546-113	10 - 100 mN	5 mN	½ graduation	56
546-114	30 - 300 mN	10 mN	½ graduation	56
546-115	0,06 - 0,5 N	0,02 N	½ graduation	56
546-116	0,1 - 1 N	0,05 N	½ graduation	56
546-117	0,15 - 1,5 N	0,05 N	½ graduation	56
546-118	0,3 - 3 N	0,1 N	½ graduation	56
546-119	0,6 - 5 N	0,2 N	½ graduation	56

All products to be sold to commercial customers.
Product illustrations are without obligation. Product descriptions, in particular any and all technical specifications, are only binding when explicitly agreed upon.

Mitutoyo

Stands, Bench Tools, Vices, V-Blocks, Plates, Protractors, Levels, Squares, Rules

Page 301

All products to be sold to commercial customers.
Product illustrations are without obligation. Product descriptions, in particular any and all technical specifications, are only binding when explicitly agreed upon.

Gauge Stands with Hardened Steel Anvils

Series 7

This gauge stand with hardened steel anvil offers you the following benefits:

- Standard version with round anvil

7001-10

7002-10

519-109-10

No.	Effective table dimensions [mm]	Column Ø [mm]	Max. measurement height [mm]	Measuring table	Fine adjustment	Stem hole ø	Perpendicularity table-stem hole [mm/mm]	Table flatness	Mass [kg]
7001-10	Ø 58	30	95	Serrated (101462)	1 mm	ø 3/8" / **9,53 mm** , 8 mm with bush (standard accessory)	0,4/100	1,3 µm	4.0
7002-10	Ø 58	30	95	Flat (101461)	1 mm	ø 3/8" / **9,53 mm** , 8 mm with bush (standard accessory)	0,4/100	1,3 µm	4.0
519-109-10	Ø 58	30	318	Serrated (101462)	1 mm	ø 3/8" / **9,53 mm** , 8 mm with bush (standard accessory)	0,4/100	1,3 µm	6.0

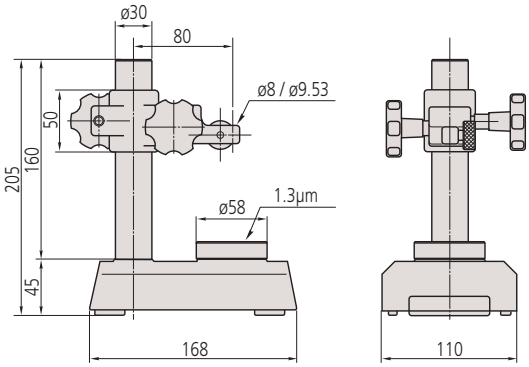

7001-10, 7002-10

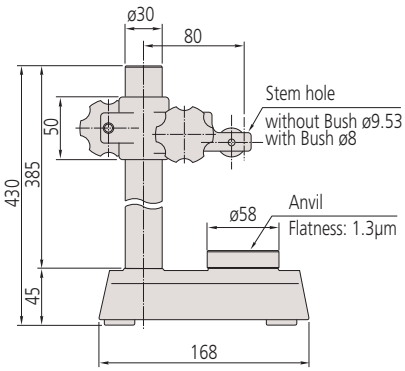

519-109-10

Standard accessories

No.	Description
101461	Flat Anvil for Gauge Stand, Ø58mm
101462	Serrated Anvil for Gauge Stand, Ø58mm
21JAA316	Stem Bush for Gauge Stand, 9,53mm to 8mm

Optional accessories

No.	Description
101463	Convex Anvil for Gauge Stand, Ø58mm

101461 for 7002-10
101462 for 7001-10, 519-109-10

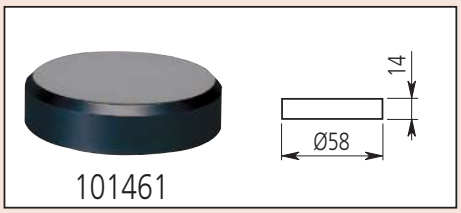

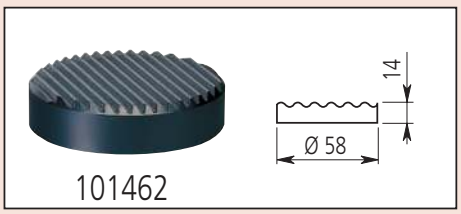

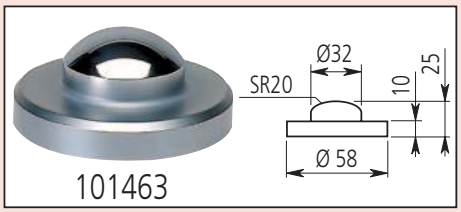

All products to be sold to commercial customers.
Product illustrations are without obligation. Product descriptions, in particular any and all technical specifications, are only binding when explicitly agreed upon.

Mitutoyo

Gauge Stands with Hardened Steel Anvils

Series 215, Series 7

This gauge stand with hardened steel anvil offers you the following benefits:

- Standard version with square anvil

7007-10

215-405-10

215-505-10 with Linear Gauge (optional)

No.	Effective table dimensions [mm]	Column Ø [mm]	Max. measurement height [mm]	Fine adjustment	Stem hole ø	Perpendicularity table-stem hole [mm/mm]	Table flatness	Mass [kg]
7007-10	90 x 90	30	90	1 mm	ø 3/8" / **9,53 mm** , 8 mm with bush (standard accessory)	0,4/100	1,3 µm	5.0
215-405-10	110 x 110	40	235	1 mm	ø 3/8" / **9,53 mm** , 8 mm with bush (standard accessory)	0,4/100	2,3 µm	10.9
215-505-10	150 x 150	50	275	Screw on column	ø 20 mm, ø 3/8" / **9,53 mm**, 8 mm with bush (standard accessory)	0,4/100	2,3 µm	19.7

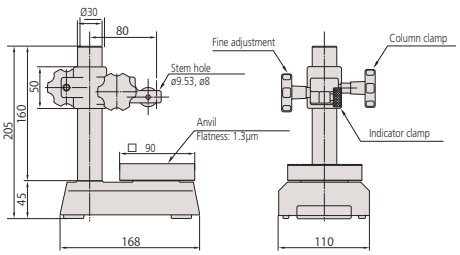

7007-10

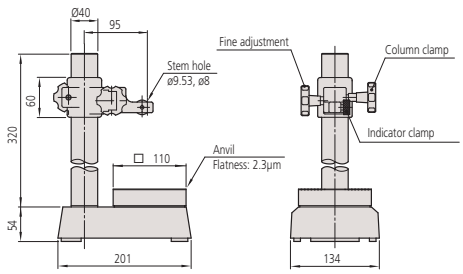

215-405-10

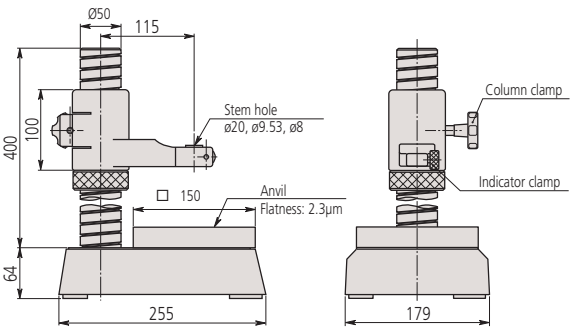

215-505-10

Standard accessories

No.	Description
21JAA316	Stem Bush for Gauge Stand, 9,53mm to 8mm
21JAA329	Stem Bush for Gauge Stand, 20mm to 8mm
21JAA330	Stem Bush for Gauge Stand, 20mm to 9,53mm

21JAA316 only for 7007-10 + 215-405-10
21JAA329 and 21JAA330 only for 215-505-10

Optional accessories

No.	Description
21JAA331	Stem Bush for Gauge Stand, 20mm to 15mm

21JAA331 : only for 215-505-10

All products to be sold to commercial customers.
Product illustrations are without obligation. Product descriptions, in particular any and all technical specifications, are only binding when explicitly agreed upon.

Gauge Stands with Hardened Steel Anvils

Optional accessories

No.	Description
913-201	Horizontal Holder, for 913-101, 913-102

913-201

Series 913

Standard version

- Simple standard version.

913-101

913-102

No.	Effective table dimensions [mm]	Column Ø [mm]	Max. measurement height [mm]	Stem hole ø
913-101	ø 50	22	100	8 mm
913-102	60 x 70	22	100	8 mm

Stands for Precision Bore Gauges

Optional accessories

No.	Description
902798	V-Attachment for 215-120-10, Stand for Bore Gauge

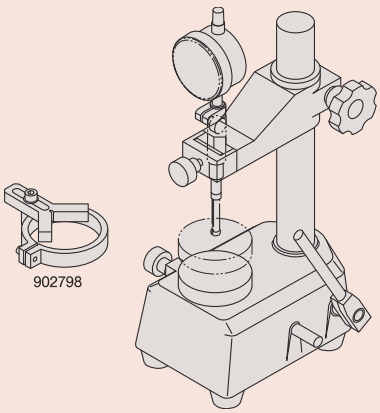

Series 215

- For efficient measurement of multiple small holes with a bore gauge Series 526

215-120-10

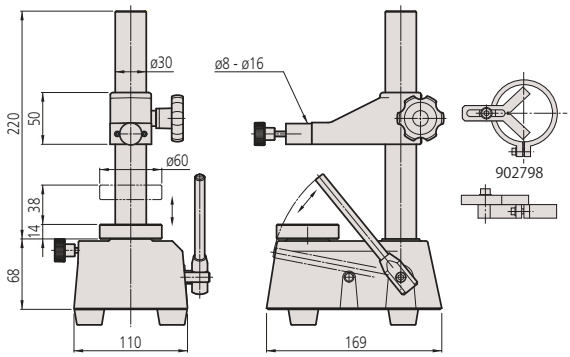

No.	Maximum measuring height [mm]	Measuring stroke [mm]	Effective table dimensions [mm]	Mass [kg]
215-120-10	110	max.38	Ø 60	6.5

All products to be sold to commercial customers.
Product illustrations are without obligation. Product descriptions, in particular any and all technical specifications, are only binding when explicitly agreed upon.

Mitutoyo

Gauge Stands with Granite Bases

Series 912

This gauge stand with granite base offers you the following benefits:

- The base stays free of burrs due to its fine grain composition and the base will stay free of corrosion

912-101

No.	Base size [mm]	Effective table dimensions [mm]	Column Ø [mm]	Max. measurement height [mm]	Throat [mm]	Arm ø [mm]	Stem hole ø	Table flatness	Mass [kg]
912-101	150 x 100 x 40	100 x 100	16	180	150	16	8 mm	2 µm	3.0

Series 912

This gauge stand with granite base offers you the following benefits:

- The base is made of granite that stays free of burrs due to its fine grain composition and the base will stay free of corrosion

912-105

No.	Base size [mm]	Effective table dimensions [mm]	Column Ø [mm]	Max. measurement height [mm]	Throat [mm]	Fine adjustment [mm]	Stem hole ø	Table flatness	Mass [kg]
912-105	260 x 140 x 50	200 x 140	35	180	120	8	8 mm	2 µm	9.5

All products to be sold to commercial customers.
Product illustrations are without obligation. Product descriptions, in particular any and all technical specifications, are only binding when explicitly agreed upon.

Gauge Stands with Granite Bases

Series 215

This gauge stand with granite base offers you the following benefits:

- The base is made of granite that stays free of burrs due to its fine grain composition and the base will stay free of corrosion

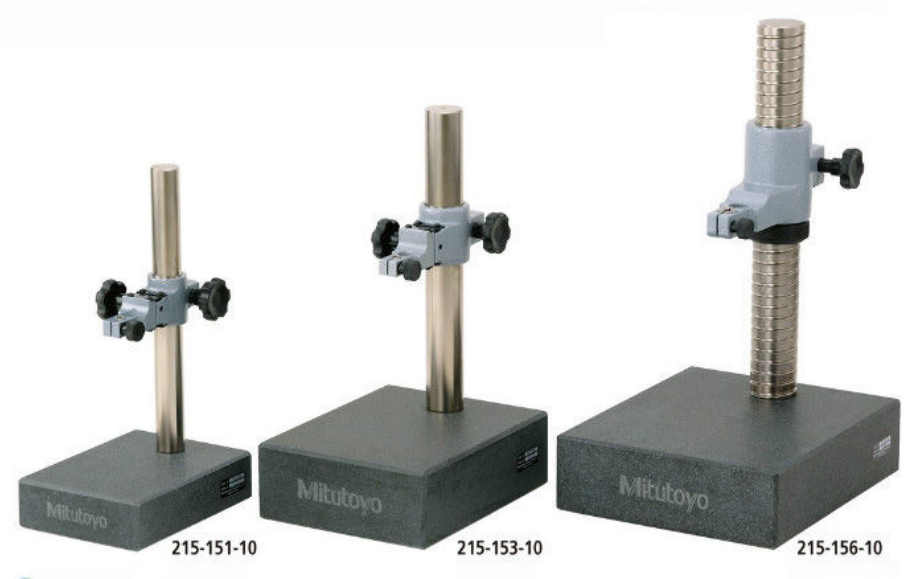

Standard accessories

No.	Description
21JAA316	Stem Bush for Gauge Stand, 9,53mm to 8mm
21JAA329	Stem Bush for Gauge Stand, 20mm to 8mm
21JAA330	Stem Bush for Gauge Stand, 20mm to 9,53mm

21JAA316 for 215-150-10, 215-151-10, 215-153-10
21JAA329 and 21JAA330 for 215-156-10

Optional accessories

No.	Description
21JAA331	Stem Bush for Gauge Stand, 20mm to 15mm

only for 215-156-10

215-150-10

No.	Column Ø [mm]	Max. measure-ment height [mm]	Fine ad-justment [mm]	Stem hole ø	Table flatness	Perpendicu-larity table-stem hole [mm/mm]	Mass [kg]
215-150-10	30	120	1	ø 3/8" / **9,53 mm** , 8 mm with bush (standard accessory)	3 µm	0,2/100	5.4
215-151-10	30	260	1	ø 3/8" / **9,53 mm** , 8 mm with bush (standard accessory)	3 µm	0,2/100	7.5
215-153-10	40	250	1	ø 3/8" / **9,53 mm** , 8 mm with bush (standard accessory)	3,5 µm	0,2/100	16.0
215-156-10	50	300	1	ø 20 mm, ø 3/8" / **9,53 mm** 8 mm with bush (standard accessory)	3,5 µm	0,2/100	27.5

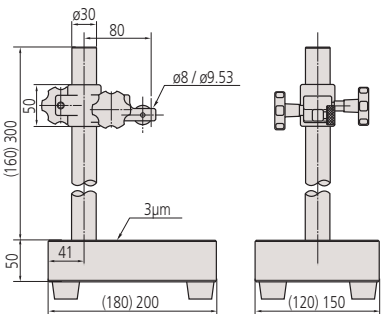

215-151-10 (215-150-10)

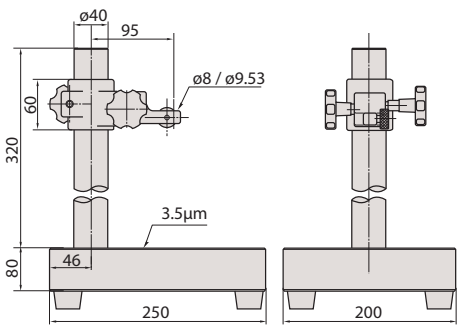

215-153-10

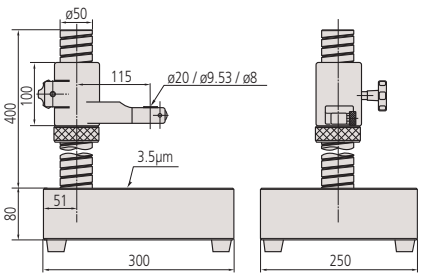

215-156-10

All products to be sold to commercial customers.
Product illustrations are without obligation. Product descriptions, in particular any and all technical specifications, are only binding when explicitly agreed upon.

Mitutoyo

Jointed Magnetic Stands

Series 011

- With mechanical locking system and fine adjustment
- Allows a dial indicator to be fixed in any position.

011533

011358

011359

011360

No.	Clamping device	Magnetic force (vertical) [N]	Base size (LxWxH) [mm]	Total height [mm]	Stem hole ø	Working radius [mm]	Thread Arm/Base	Mass [kg]
011533	magnetic	300	34 x 30 x 35	220	8 mm	130	M6 x 1	0.45
011358	magnetic	750	60 x 50 x 55	310	8 mm	200	M8 x 1,25	1.55
011359	magnetic	750	60 x 50 x 55	397	8 mm	280	M8 x 1,25	1.85
011360	magnetic	900	75 x 50 x 55	517	8 mm	400	M8 x 1,25	2.1

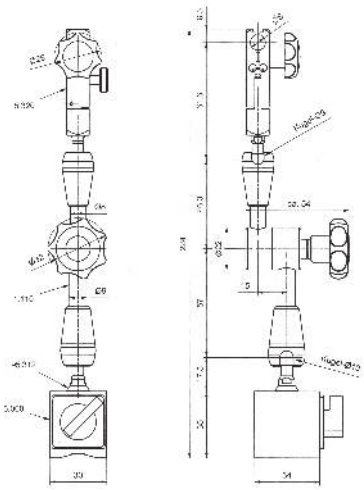

011533

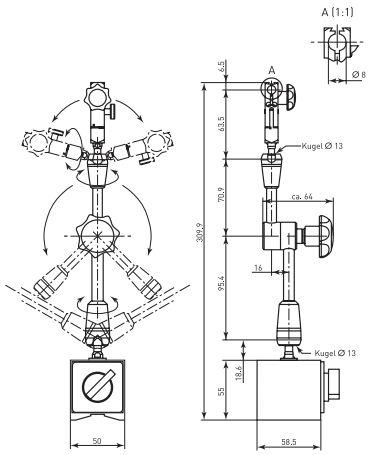

011358

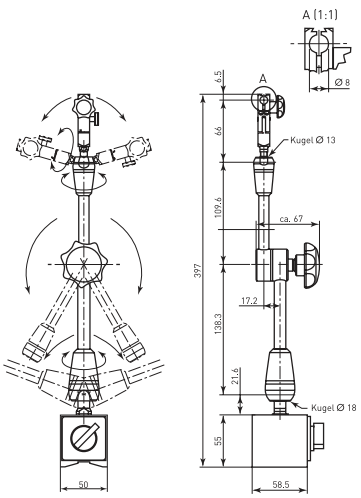

011359

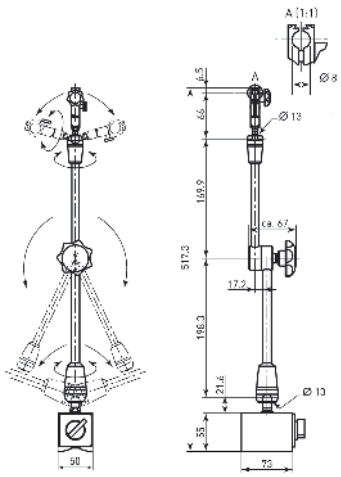

011360

All products to be sold to commercial customers.
Product illustrations are without obligation. Product descriptions, in particular any and all technical specifications, are only binding when explicitly agreed upon.

Jointed Magnetic Stands

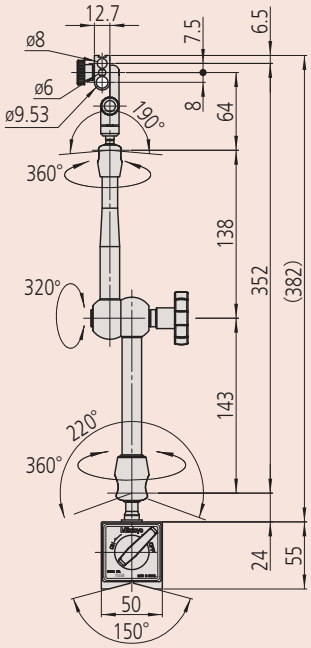

7033B

Series 7

This jointed magnetic stand offers you the following benefits:

- It comes with a mechanical locking system and allows fine adjustment.
- You can also fix a dial indicator in any position by mechanically clamping the articulated arm.

7031-10

7032-10

7033-10

No.	Clamping device	Magnetic force (vertical) [N]	Base size (LxWxH) [mm]	Total height [mm]	Fine adjust-ment	Stem hole ø	Working radius [mm]	Thread Arm/Base	Mass [kg]
7031-10	magnetic	300	36 x 30 x 36	214	with fine feed wheel +-4°	6 mm, 8 mm, 9,53 mm	159	M5 x 0,8	0.59
7032-10	magnetic	600	59 x 50 x 55	345	with fine feed wheel +-4°	6 mm, 8 mm, 9,53 mm	260	M8 x 1,25	1.6
7033-10	magnetic	600	59 x 50 x 55	425	with fine feed wheel +-4°	6 mm, 8 mm, 9,53 mm	352	M8 x 1,25	1.75

Flexible Jointed Arms

Series 011 / 56A

011361
Mechanical clamping
Dimensions : see 011359

56AAK793
Mechanical clamping
Dimensions: see 7033-10

011363
Mechanical clamping
Dimesions: see 011360

No.	Stem hole ø	Working radius [mm]	Thread Arm/Base	Mass [kg]
63AAA130	8 mm	130	M6 x 1 mm	3.0
011361	8 mm	200	M8 x 1,25	0.4
011362	8 mm	280	M8 x 1,25	0.8
56AAK793	6, 8 mm, 3/8" / **9,53 mm**	320	M8 x 1,25	0.83
011363	8 mm	400	M8 x 1,25	0.9

All products to be sold to commercial customers.
Product illustrations are without obligation. Product descriptions, in particular any and all technical specifications, are only binding when explicitly agreed upon.

Mitutoyo

Magnetic Bases

Series 011 / 7

- V-block base type.

No.	Base size (LxWxH) [mm]	Magnetic force (vertical) [N]	Thread Arm/Base	Mass [kg]
63AAA470	34 x 30 x 35	300	M6 x 1	0.45
7013-10	58,5 x 50 x55	600	M8 x 1,25	0.99
011364	75 x 50 x 55	900	M8 x 1,25	1.25

7013-10

Magnetic Stands

Series 7

- V-block base type.

7010S-10

7011S-10

No.	Clamping device	Magnetic force (vertical) [N]	Base size (LxWxH)	Total height [mm]	Fine adjustment	Stem hole ø	Working radius [mm]	Thread Arm/Base	Mass [g]
7010S-10	magnetic	600	59 x 50 x 55 mm	235	None	3/8" / 9,53 mm, 4 mm, 8 mm (with stem bush)	150	M8 x 1,25	1250
7011S-10	magnetic	600	59 x 50 x 55 mm	235	with fine adjustment knop	3/8" / 9,53 mm, 4 mm, 8 mm (with stem bush)	160	M8 x 1,25	1450
7015-10	magnetic	600	59 x 50 x 55 mm	235	with fine feed wheel +-4°	3/8" / 9,53 mm, 6 mm, 8 mm (with stem bush)	160	M8 x 1,25	1370

Standard accessories

No.	Description
02AZC291	Stem Bush for Magnet Stand, 9,53mm to 8mm

Optional accessories

No.	Description
02AZC282	Cross arm for Magnet Stand, 300mm

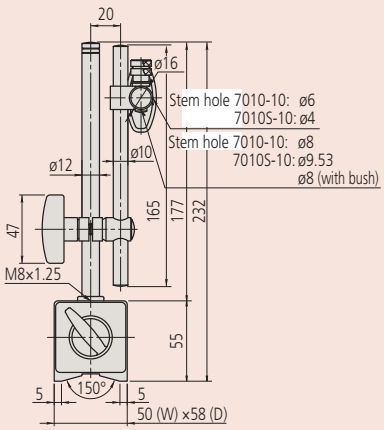

All products to be sold to commercial customers.
Product illustrations are without obligation. Product descriptions, in particular any and all technical specifications, are only binding when explicitly agreed upon.

Magnetic Stands

Standard accessories

No.	Description
02AZC291	Stem Bush for Magnet Stand, 9,53mm to 8mm

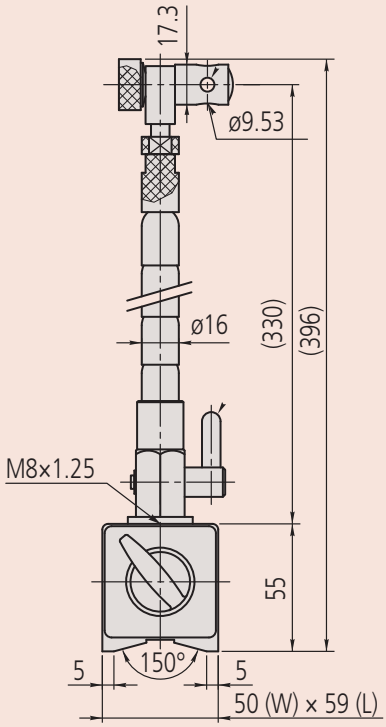

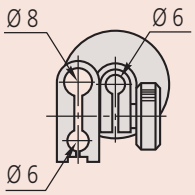

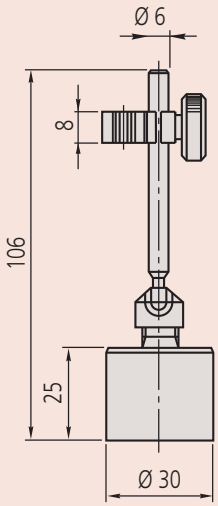

Series 7

With V-block base and flexible arm.

7012-10

No.	Clamping device	Magnetic force (vertical) [N]	Base size (LxWxH)	Total height [mm]	Stem hole ø	Thread Arm/ Base	Mass [g]
7012-10	magnetic	600	59 x 50 x 55 mm	396	6 mm, 3/8" / 9,53 mm, 8 mm (with stem bush)	M8 x 1,25	1500

Series 7

This is a mini type of magnetic stand that offers you the following benefits:

- Mini measuring stand without magnet ON/OFF.
- It is designed to accept dial test indicators with 6 mm or 8 mm diameter stems, or dovetail.

7014-10

No.	Clamping device	Magnetic force (vertical) [N]	Base size [mm]	Total height [mm]	Stem hole ø	Working radius [mm]	Mass [g]
7014-10	magnetic	150	ø 30	106	6 mm, 8 mm	68	170

All products to be sold to commercial customers.
Product illustrations are without obligation. Product descriptions, in particular any and all technical specifications, are only binding when explicitly agreed upon.

Precision Vices

Series 930

- It is made of tool steel, hardened and precision ground.
- It has a horizontally ground V-groove in the moveable jaw.

930-611

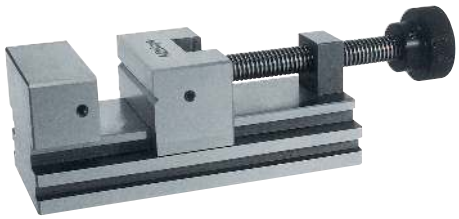

930-602

No.	A [mm]	B [mm]	C [mm]	D [mm]	E [mm]	F [mm]	G [mm]	H [mm]	I [mm]	J H x D [mm]	Mass [kg]
930-611	90	60	50	25	25	25	30	30	M5	6 x 6	1.6
930-601	160	70	62	30	32	33	80	45	M6	7 x 7	4.0
930-602	210	90	80	40	40	40	120	50	M6	8 x 7	7.6
930-612	285	120	90	40	50	55	150	70	M6	10 x 7	17.4

Specifications

Parallelism	0,002 mm / 100 mm
Squareness	0,005 mm / 100 mm

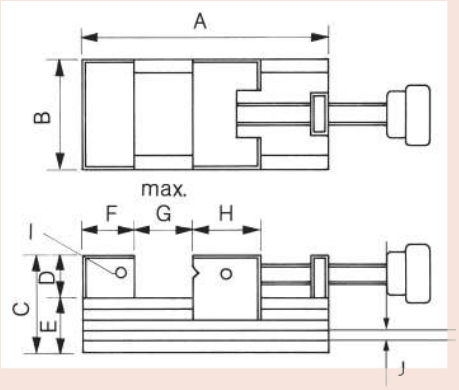

930-602

Series 930

- It is made of tool steel, hardened and precision ground.
- With hydraulic system for max.clamping force of 14,7 kN.
- It has a horizontally ground V-groove in the movable jaw.

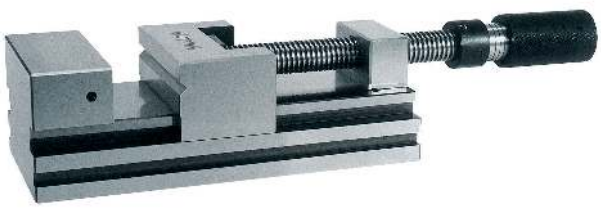

930-616

No.	A [mm]	B [mm]	C [mm]	D [mm]	E [mm]	F [mm]	G [mm]	H [mm]	I [mm]	J H x D [mm]	Mass [kg]
930-616	285	120	90	40	50	55	150	70	M6	10 x 7	17.7

Specifications

Parallelism	0,002 mm / 100 mm
Squareness	0,03 mm / 100 mm

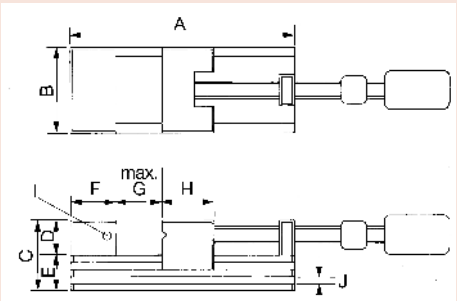

All products to be sold to commercial customers.
Product illustrations are without obligation. Product descriptions, in particular any and all technical specifications, are only binding when explicitly agreed upon.

Precision Vices

Series 930

- It is made of PET plastics, light weight, and protecting workpieces from scratches.

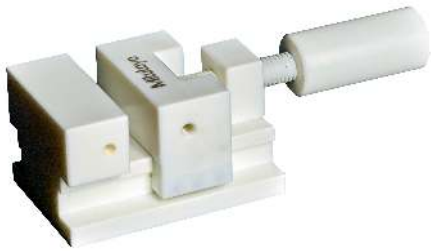

930-641

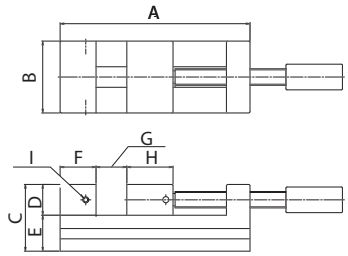

No.	A [mm]	B [mm]	C [mm]	D [mm]	E [mm]	F [mm]	G [mm]	H [mm]	I [mm]	Mass [kg]
930-641	90	60	50	25	25	25	30	30	M5	0.35
930-642	160	70	62	30	32	33	80	45	M6	0.7

Specifications

Parallelism	0,02 mm
Squareness	0,03 mm (930-641), 0,05 mm (930-642)

Series 930

This precision vice has a pull-down clamping action and offers you the following benefits:

- It gives you high accuracy for precision grinding, milling, measuring and eroding.
- It is made of tool steel, hardened and precision ground.

930-630

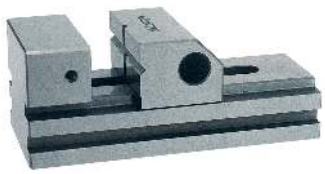

930-607

930-632

Specifications

Parallelism	0,002 mm / 100 mm
Squareness	0,005 mm / 100

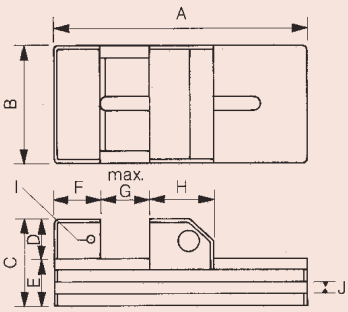

No.	Remarks	A [mm]	B [mm]	C [mm]	D [mm]	E [mm]	F [mm]	G [mm]	H [mm]	I [mm]	J H x D [mm]	Mass [kg]
930-606	V-groove (moveable jaw) vertical and horizontal	160	70	62	30	32	33	80	45	M6	8 x 7	3.0
930-607	V-groove (moveable jaw) vertical and horizontal	210	90	80	40	40	40	120	50	M6	10 x 7	5.8
930-630	V-groove (moveable jaw) vertical	75	34	35	15	20	20	25	30	M4	Ø 8 x 4	0.38
930-631	V-groove (moveable jaw) horizontal	110	45	45	20	25	25	50	35	M5	6 x 6	1.0
930-632	V-groove (moveable jaw) horizontal	285	120	90	40	50	60	150	70	M6	12 x 7	13.5
930-633	V-groove (moveable jaw) none	370	175	95	45	50	60	200	110	M8	12 x 10	28.7

All products to be sold to commercial customers.
Product illustrations are without obligation. Product descriptions, in particular any and all technical specifications, are only binding when explicitly agreed upon.

Mitutoyo

Precision Sine Plates

Series 930

- Sine bar style of auxiliary plate.
- It is made of tool steel, hardened and precision ground.
- Accurate angle setting is made by gauge blocks, max. 45°.
- 930-626 Work piece can be fixed on plate surface by tap holes and stoppers on side.
- 930-628 and 930-629 can set the angle at two directions which go straight angularly.
- 930-629 Permanently magnet chuck is adapted.

930-626

930-628

930-629

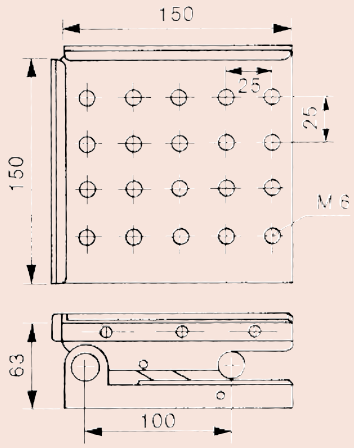

930-626

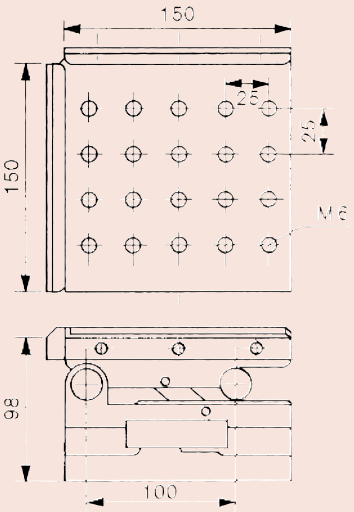

930-628

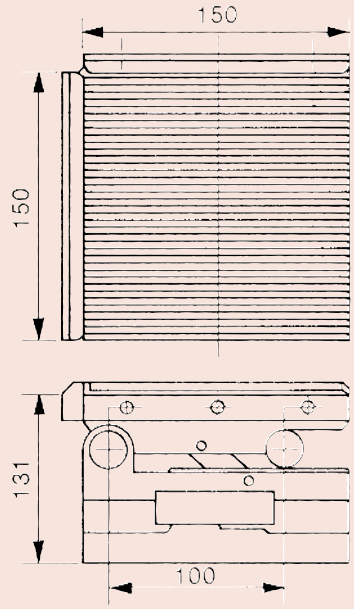

930-629

No.	Parallelism	Squareness	Remarks	Setting accuracy at 45°	Mass [kg]
930-626	0,002 mm / 100 mm	0,005 / 100	With M6 clamping holes	±15"	7.6
930-628	0,002 mm / 100 mm	0,005 / 100	Compound-axis type with angle in two directions With M6 clamping holes	±15"	11.3
930-629	0,002 mm / 100 mm	0,005 / 100	Coumpound-axis type With lever-operated magnetic chuck	±15"	16.5

All products to be sold to commercial customers.
Product illustrations are without obligation. Product descriptions, in particular any and all technical specifications, are only binding when explicitly agreed upon.

Cast Iron V-Blocks

Specifications

Hardness	180-250 HBW
Parallelism between V-groove and base surface	16 µm
Difference of the height of the pair	16 µm

Series 910

- Made of dense special cast iron, highly wear resistant.
- The 90° V-block cutting angle is parallel to the base and ismetric in pairs.
- For scribing, adjusting and testing cylindrical parts.

910-112

No.	Length [mm]	Width [mm]	Height [mm]	Max. workpiece ø [mm]	Delivered	Mass [kg]
910-111	100	40	30	6 - 40	in pairs	1.5
910-112	150	50	40	8 - 50	in pairs	3.5
910-113	200	70	50	8 - 70	in pairs	6.5
910-114	250	85	60	12 - 85	in pairs	10.0
910-115	300	100	70	12 - 100	in pairs	15.0

Cast Iron V-Blocks

Specifications

Hardness	180-250 HBW
Parallelism between V-groove and base surface	16 µm
Difference of the height of the pair	16 µm

Series 911

These are quadruple-V type V-Blocks, that offer you the following benefits:
- 90° V-blocks enable you to scribe, adjust and test cylindrical parts.
- There are two V-blocks per set.

911-111

No.	Length [mm]	Width [mm]	Height [mm]	Max. workpiece ø [mm]	Delivered	Mass [kg]
911-111	60	120	100	8 - 90	in pairs	6.5
911-112	75	150	130	8 - 110	in pairs	13.5
911-113	90	200	170	8 - 150	in pairs	23.0

All products to be sold to commercial customers.
Product illustrations are without obligation. Product descriptions, in particular any and all technical specifications, are only binding when explicitly agreed upon.

Mitutoyo

Cast Iron Surface Plates

Series 902

- A ribbed design gives you rigidity with minimum weight, and a special cast iron confers a high degree of wear resistance.

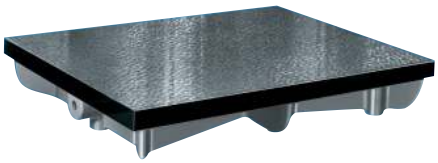

902-304

No.	Dimensions L x W x H [mm]	Accuracy	Mass [kg]
902-301	300 x 300 x 70	According to DIN 876; Grade 1 : fine scraped	15.0
902-302	400 x 400 x 75	According to DIN 876; Grade 1 : fine scraped	35.0
902-303	500 x 400 x 90	According to DIN 87; Grade 1 : fine scraped	40.0
902-304	600 x 500 x 95	According to DIN 876; Grade 1 : fine scraped	65.0
902-305	800 x 500 x 100	According to DIN 876; Grade 1 : fine scraped	95.0
902-306	1000 x 750 x 140	According to DIN 876; Grade 1 : fine scraped	210.0
902-307	1200 x 800 x 140	According to DIN 876; Grade 1 : fine scraped	230.0
902-308	1500 x 1000 x 180	According to DIN 876; Grade 1 : fine scraped	490.0
902-309	2000 x 1000 x 210	According to DIN 876; Grade 1 : fine scraped	780.0
902-101	300 x 300 x 70	According to DIN 876; Grade 3 : fine planed	15.0
902-102	400 x 400 x 75	According to DIN 876; Grade 3 : fine planed	35.0
902-103	500 x 400 x 90	According to DIN 876; Grade 3 : fine planed	40.0
902-104	600 x 500 x 95	According to DIN 876; Grade 3 : fine planed	65.0
902-105	800 x 500 x 100	According to DIN 876; Grade 3 : fine planed	95.0
902-106	1000 x 750 x 140	According to DIN 876; Grade 3 : fine planed	210.0
902-107	1200 x 800 x 140	According to DIN 876; Grade 3 : fine planed	230.0
902-108	1500 x 1000 x 180	According to DIN 876; Grade 3 : fine planed	490.0
902-109	2000 x 1000 x 210	According to DIN 876; Grade 3 : fine planed	780.0

Granite Squares 90°

Series 972

- It is made of natural hard stone, with two sides precision ground.

972-106

No.	Length [mm]	Width [mm]	Accuracy	Delivered	Mass [kg]
972-106	300 x 200	50	Perpendicularity: DIN 875 Flatness: DIN 875 Grade 00	With certificate of inspection	6.5
972-107	400 x 250	50	Perpendicularity: DIN 875 Flatness: DIN 875 Grade 00	With certificate of inspection	10.0
972-108	500 x 300	60	Perpendicularity: DIN 875 Flatness: DIN 875 Grade 00	With certificate of inspection	17.0
972-109	600 x 400	70	Perpendicularity: DIN 875 Flatness: DIN 875 Grade 00	With certificate of inspection	30.0

All products to be sold to commercial customers.
Product illustrations are without obligation. Product descriptions, in particular any and all technical specifications, are only binding when explicitly agreed upon.

Granite Surface Plates DIN 876

Specifications

Hardness	HV 850-900
Flexural strength	13-22 N/mm^2
Compressive strength	Approx. 280 N/mm^2
Coefficient of thermal expansion	(5 to 7,5) x 10^{-6} x K^{-1}

Granite plate and stand (optional)

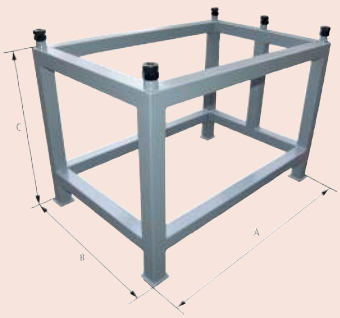

Dimensions for stand

Series 901

These Granite Surface Plates and optional stands offer you the following benefits:

- Surface diamond lapped, side face fine ground, backside fine sawn.
- The optional stand is a welded construction including 3-point bearings and two adjusting screws.

1. Accuracy Grade 00

No.	Dimensions L x W x H [mm]	Accuracy	Max. workpiece load [kg]	Mass [kg]
901-131	400 x 250 x 50	DIN 876 Grade 00	50	15.0
901-132	400 x 400 x 50	DIN 876 Grade 00	60	25.0
901-133	630 x 400 x 70	DIN 876 Grade 00	65	53.0
901-134	630 x 630 x 70	DIN 876 Grade 00	75	83.0
901-135	1000 x 630 x 100	DIN 876 Grade 00	150	189.0
901-136	1000 x 1000 x 100	DIN 876 Grade 00	250	300.0
901-137	1200 x 800 x 160	DIN 876 Grade 00	600	460.0
901-138	1600 x 1000 x 160	DIN 876 Grade 00	650	768.0
901-139	2000 x 1000 x 220	DIN 876 Grade 00	750	1,320.0

2. Accuracy Grade 0

No.	Dimensions L x W x H [mm]	Accuracy	Max. workpiece load [kg]	Mass [kg]
901-121	400 x 250 x 50	DIN 876 Grade 0	100	15.0
901-122	400 x 400 x 50	DIN 876 Grade 0	120	25.0
901-123	630 x 400 x 70	DIN 876 Grade 0	130	53.0
901-124	630 x 630 x 70	DIN 876 Grade 0	150	83.0
901-125	1000 x 630 x 100	DIN 876 Grade 0	300	189.0
901-126	1000 x 1000 x 100	DIN 876 Grade 0	500	300.0
901-127	1200 x 800 x 160	DIN 876 Grade 0	1.200	460.0
901-128	1600 x 1000 x 160	DIN 876 Grade 0	1.300	768.0
901-129	2000 x 1000 x 220	DIN 876 Grade 0	1.500	1,320.0

3. Accuracy Grade 1

No.	Dimensions L x W x H [mm]	Accuracy	Max. workpiece load [kg]	Mass [kg]
901-111	400 x 250 x 50	DIN 876 Grade 1	100	15.0
901-112	400 x 400 x 50	DIN 876 Grade 1	120	25.0
901-113	630 x 400 x 70	DIN 876 Grade 1	130	53.0
901-114	630 x 630 x 70	DIN 876 Grade 1	150	83.0
901-115	1000 x 630 x 100	DIN 876 Grade 1	300	189.0
901-116	1000 x 1000 x 100	DIN 876 Grade 1	500	300.0
901-117	1200 x 800 x 160	DIN 876 Grade 1	1.200	460.0
901-118	1600 x 1000 x 160	DIN 876 Grade 1	1.300	768.0
901-119	2000 x 1000 x 220	DIN 876 Grade 1	1.500	1,320.0

4. Accuracy Grade 2

No.	Dimensions L x W x H [mm]	Accuracy	Max. workpiece load [kg]	Mass [kg]
901-101	400 x 250 x 50	DIN 876 Grade 2	100	15.0
901-102	400 x 400 x 50	DIN 876 Grade 2	120	25.0
901-103	630 x 400 x 70	DIN 876 Grade 2	130	53.0
901-104	630 x 630 x 70	DIN 876 Grade 2	150	83.0
901-105	1000 x 630 x 100	DIN 876 Grade 2	300	189.0
901-106	1000 x 1000 x 100	DIN 876 Grade 2	500	300.0
901-107	1200 x 800 x 160	DIN 876 Grade 2	1.200	460.0
901-108	1600 x 1000 x 160	DIN 876 Grade 2	1.300	768.0
901-109	2000 x 1000 x 220	DIN 876 Grade 2	1.500	1,320.0

Stand

No.	Dimensions L x W x H [mm]	A [mm]	B [mm]	C [mm]	Mass [kg]
901-931	630 x 400 x 70	550	350	770	22.0
901-932	630 x 630 x 70	550	550	770	25.0
901-933	1000 x 630 x 100	750	550	740	28.0
901-934	1000 x 1000 x 100	750	750	740	30.0
901-935	1200 x 800 x 160	900	600	680	30.0
901-936	1600 x 1000 x 160	1050	750	680	35.0
901-937	2000 x 1000 x 220	1450	750	620	40.0

All products to be sold to commercial customers.
Product illustrations are without obligation. Product descriptions, in particular any and all technical specifications, are only binding when explicitly agreed upon.

Mitutoyo

Universal Bevel Protractors

Series 187

This universal bevel protector offers you the following benefits:

- Its high-precision angle gauge enables you to take accurate angle measurements of machines, moulds and jigs.
- You can attach it to height gauges.

187-201

187-901

Specifications

Graduation	5 ' (0° - 90° - 0°)

Standard accessories

No.	Description
187-106	Steel Rule, **150mm**/6", Metric/Inch
187-107	Steel Rule, **300mm**/12", Metric/Inch
950750	Holder for Mounting on Height Gauges, Metric, Series 187
187-105	Acute angle attachment, for Series 187

187-106 for 187-901, 187-907
187-107 for 187-901, 187-908
950750 for Height Gauge with 9x 9 mm scriber shaft for 187-901, 187-907, 187-908
950750 for 187-201 and 187-901

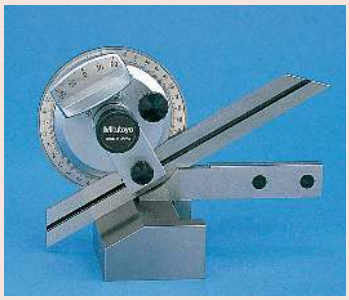

Metric

No.	Range [Inch]	Blade edge angle	Blade length	Delivered	Mass [g]
187-201	0-90° x4 (360°)	30°, 60° edges	137 mm	In a box with acute angle attachment	212
187-901	0-90° x4 (360°)	60°, 45°, 30° edges	150, 300 mm	In a box with acute angle attachment, holder for height gauge, magnifier	390
187-907	0-90° x4 (360°)	60°, 45° edges	150 mm	In a box with holder for height gauge, magnifier	284
187-908	0-90° x4 (360°)	60°, 45° edges	300 mm	In a box with holder for height gauge, magnifier	318

All products to be sold to commercial customers.
Product illustrations are without obligation. Product descriptions, in particular any and all technical specifications, are only binding when explicitly agreed upon.

Digimatic Universal Protractors

Series 187

This is a Digimatic Universal Protractor with data output that offers you the following features:

- It has an easy-to-read digital display.
- It automatically turns off after 10 minutes, and gives you fixed reference points for easy adjustment.
- You can slide and clamp the measuring blade over the entire length.
- You can make fine adjustments to precisely adjust arbitrary angle dimensions.
- It comes with a mounting facility on height gauges and tracers of series 192 via holder.

187-502

950750

Functions	Series 187
ON/OFF	■
DATA (output with cable) / HOLD (display value)	■
Data output	■
ZERO SET	■
PRESET	■
Angle sexagesimal/decimal	■

Specifications

Max. permissible error	2' (0,03°)
Repeatability	1' (0,01°)
Power supply	1 battery CR-2032
Battery life	Approx. 2000 hours
Display	LCD with Character Height 6,5 mm

Standard accessories

No.	Description
187-106	Steel Rule, **150mm**/6", Metric/Inch
187-107	Steel Rule, **300mm**/12", Metric/Inch
950750	Holder for Mounting on Height Gauges, Metric, Series 187

187-106 for 187-501
187-107 for 187-502
950750 for 187-501, 187-502

Optional accessories

No.	Description
905338	Digimatic Cable, Flat Straight Type, 1m
905409	Digimatic Cable, Flat Straight Type, 2m
06AFM380F	USB Input Tool Direct (Digimatic USB), Digi/Digi2, Flat Straight Type
02AZD880G	U-WAVE-T, Buzzer Type, Wireless Transmitter
02AZD730G	U-WAVE-T, IP67 Type, Wireless Transmitter
02AZD790F	U-WAVE-T Connection Cable F, Flat Straight Type
187-105	Acute angle attachment, for Series 187

Consumable spares

No.	Description
05SAA217D	Lithium battery CR-2032, 1 pcs.

Metric

No.	Digital step	Blade length	Delivered	Mass [g]
187-501	1' (0,01°)	150 mm	In a box including CR-2032 battery, 150 mm steel rule, holder for height gauge	624
187-502	1' (0,01°)	300 mm	In a box including CR-2032 battery, 300 mm steel rule, holder for height gauge	662

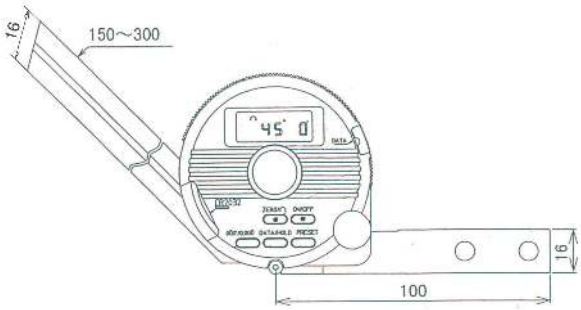

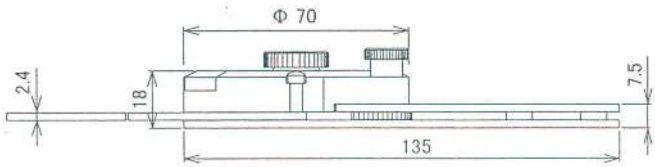

All products to be sold to commercial customers.
Product illustrations are without obligation. Product descriptions, in particular any and all technical specifications, are only binding when explicitly agreed upon.

Mitutoyo

Digital Precision Levels

Series 950

This Digital Precision Level offers you the following benefits:
- You can measure flatness, squareness and angularity.
- Precision support surfaces in aluminium frame provide you with high rigidity and low weight.

950-318

No.	Max. permissible error (degrees)	Repeatability (degrees)	Data output	Sensitivity (degrees)	Mass [g]	Delivered
950-318	0,05 (0 to 10) 0,1 (80 to 90) 0,2 (10 to 80)	0,05		0,01 (0 to 9,99) 0,1 (10 to 90)	300	Including box

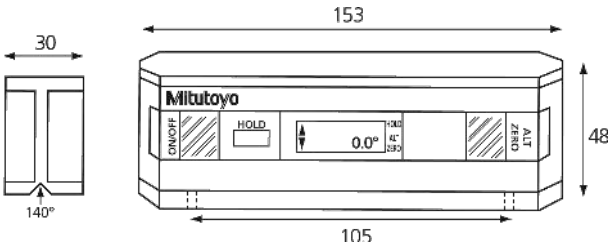

Distance between two M 3 x 0,5 mm
Mounting holes

Specifications

Range	360° (4 x 90°)
Power supply	Standard battery (9 V) 6LR61
Battery life	Approx. 500 hours

Optional accessories

No.	Description
50AAA983A	RS-232C Output Cable, for series 950

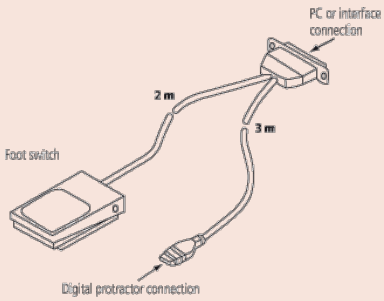

Feeler Gauges

Series 184 - Feeler Gauge

This feeler gauge is ideal for a variety of measuring tasks and offers you the following benefits:
- Size clearly stamped on each leaf
- Leaves are easy to remove and can be individually locked open.

184-304S

Metric

No.	Range	Accuracy	Number of leaves	Leaf length [mm]
184-304S	0,05-1 mm	0,03-0,15 mm: ±0,005 mm 0,2- 0,5 mm: ±0,012 mm 0,55-1 mm: ±0,02 mm	20	150

All products to be sold to commercial customers.
Product illustrations are without obligation. Product descriptions, in particular any and all technical specifications, are only binding when explicitly agreed upon.

90° Steel Squares

Bevelled-edge square

Try square

Try square with shoulders

Series 916

This 90° Steel Square offers you the following benefits:

- Three types of square are available.
- It is hardened, and has precision ground edges.

Bevelled-edge square

No.	Length [mm]	Cross section	Accuracy	Grade	Remarks
916-105	50x40	14x4	According to DIN 875	00	stainless steel
916-106	75x50	15x4	According to DIN 875	00	stainless steel
916-107	100x70	20x5	According to DIN 875	00	stainless steel
916-108	150x100	25x5	According to DIN 875	00	stainless steel
916-109	200x130	30x6	According to DIN 875	00	stainless steel

Try square

No.	Length [mm]	Cross section	Accuracy	Grade	Remarks
916-202	75x50	15x5	According to DIN 875	0	stainless steel
916-203	100x70	20x5	According to DIN 875	0	stainless steel
916-204	150x100	25x5	According to DIN 875	0	stainless steel
916-205	200x130	30x6	According to DIN 875	0	stainless steel
916-206	250x165	35x7	According to DIN 875	0	stainless steel
916-207	300x200	40x8	According to DIN 875	0	stainless steel
916-208	400x265	45x10	According to DIN 875	0	stainless steel
916-222	75x50	15x5	According to DIN 875	1	steel
916-223	100x70	20x5	According to DIN 875	1	steel
916-224	150x100	25x5	According to DIN 875	1	steel
916-225	200x130	30x6	According to DIN 875	1	steel
916-226	250x165	35x7	According to DIN 875	1	steel
916-227	300x200	40x8	According to DIN 875	1	steel
916-228	400x265	45x10	According to DIN 875	1	steel
916-229	500x330	50x10	According to DIN 875	1	steel
916-232	75x50	15x5	According to DIN 875	2	steel
916-233	100x70	20x5	According to DIN 875	2	steel
916-234	150x100	25x5	According to DIN 875	2	steel
916-235	200x130	30x6	According to DIN 875	2	steel
916-236	250x165	35x7	According to DIN 875	2	steel
916-237	300x175	35x7	According to DIN 875	2	steel
916-238	400x100	35x7	According to DIN 875	2	steel
916-239	500x150	40x8	According to DIN 875	2	steel

Try square with shoulders

No.	Length [mm]	Cross section	Accuracy	Grade	Remarks
916-311	75x50	15x5	According to DIN 875	0	stainless steel
916-312	100x70	20x5	According to DIN 875	0	stainless steel
916-313	150x100	25x5	According to DIN 875	0	stainless steel
916-314	200x130	30x6	According to DIN 875	0	stainless steel
916-315	250x165	35x7	According to DIN 875	0	stainless steel
916-316	300x200	40x8	According to DIN 875	0	stainless steel
916-317	400x265	45x10	According to DIN 875	0	stainless steel
916-321	75x50	15x5	According to DIN 875	1	steel
916-322	100x70	20x5	According to DIN 875	1	steel
916-323	150x100	25x5	According to DIN 875	1	steel
916-324	200x130	30x6	According to DIN 875	1	steel
916-325	250x165	35x7	According to DIN 875	1	steel
916-326	300x200	40x8	According to DIN 875	1	steel
916-327	400x265	45x10	According to DIN 875	1	steel
916-328	500x330	50x10	According to DIN 875	1	steel
916-332	100x70	20x5	According to DIN 875	2	steel
916-333	150x100	25x5	According to DIN 875	2	steel
916-334	200x130	30x6	According to DIN 875	2	steel
916-335	250x165	35x7	According to DIN 875	2	steel
916-336	300x175	35x7	According to DIN 875	2	steel
916-337	400x200	35x7	According to DIN 875	2	steel
916-338	500x250	40x8	According to DIN 875	2	steel

All products to be sold to commercial customers.
Product illustrations are without obligation. Product descriptions, in particular any and all technical specifications, are only binding when explicitly agreed upon.

Mitutoyo

Knife Edge Straight Edge

Series 528

This Knife Edge Straight Edge offers you the following benefits:
- Its straight edges are especially suited to testing the flatness of surfaces.
- It has a hardened, ground and micro lapped measuring edge.

Series 528

No.	Length [mm]	Cross section	Accuracy
528-100	50	25 x 6 mm	DIN 874-2
528-101	75	25 x 6 mm	DIN 874-2
528-102	100	25 x 6 mm	DIN 874-2
528-110	125	25 x 6 mm	DIN 874-2
528-103	150	25 x 6 mm	DIN 874-2
528-104	200	25 x 6 mm	DIN 874-2
528-105	300	32 x 7 mm	DIN 874-2
528-106	400	40 x 8 mm	DIN 874-2
528-107	500	50 x 10 mm	DIN 874-2

Specifications

Section	60°

Steel Rules

Series 182

These are rigid and fully-flexible rules that offer you the following benefits:
- They have clear graduations on satin-chrome finish.
- The rules are stainless tempered.

182-211

182-131

Metric

Fully-flexible rule

No.	Range [mm]	Graduation	Width	Thickness
182-211	0 - 150	1 mm / 0,5 mm (on both faces)	12 mm	0,4 mm
182-231	0 - 300	1 mm / 0,5 mm (on both faces)	12 mm	0,4 mm
182-251	0 - 450	1 mm / 0,5 mm (on both faces)	19 mm	0,4 mm
182-271	0 - 600	1 mm / 0,5 mm (on both faces)	19 mm	0,4 mm

Metric

Wide rigid rule

No.	Range [mm]	Graduation	Width	Thickness
182-111	0 - 150	1 mm / 0,5 mm (on both faces)	19 mm	1,2 mm
182-131	0 - 300	1 mm / 0,5 mm (on both faces)	25 mm	1,2 mm
182-151	0 - 450	1 mm / 0,5 mm (on both faces)	30 mm	1,2 mm
182-171	0 - 600	1 mm / 0,5 mm (on both faces)	30 mm	1,2 mm

All products to be sold to commercial customers.
Product illustrations are without obligation. Product descriptions, in particular any and all technical specifications, are only binding when explicitly agreed upon.

Calibration Instruments

Height Masters
Page 322

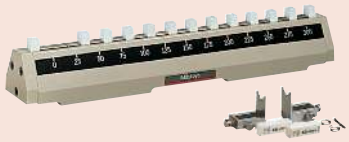

Check Masters
Page 326

Calibration Tools
Page 330

All products to be sold to commercial customers.
Product illustrations are without obligation. Product descriptions, in particular any and all technical specifications, are only binding when explicitly agreed upon.

Mitutoyo

Digital Height Masters

Series 515

This is a standard model with a digital display, that offers you the following benefits:

- It gives you all the essential specifications required for a versatile height standard.
- You can use it to calibrate and set height gauges and other measuring instruments.
- Models have two measuring faces on the same level, one facing up and the other down.

515-374

Metric

No.	Range [mm]	Digital step	Block step	Feed error	Retrace error	Delivered	Mass [kg]
515-374	10 - 310	0,001 mm	20 mm staggered	±2 µm	2 µm	In a wooden case with certificate of inspection, 11 mm gauge block, SR-44 battery	9.5
515-376	10 - 460	0,001 mm	20 mm staggered	±2 µm	2 µm	In a wooden case with certificate of inspection, 11 mm gauge block, SR-44 battery	13.6
515-378	10 - 610	0,001 mm	20 mm staggered	±2,5 µm	2,5 µm	In a wooden case with certificate of inspection, 11 mm gauge block, SR-44 battery	16.0

Functions	Series 515
DATA (output with cable) / HOLD (display value)	■
Auto Power OFF after 20 min. non use	■
Low voltage alarm	■
Data output	■
PRESET	■
ABS / INC (INC ZERO)	■

Specifications

Graduation	0,002 mm
Micrometer adjustment	20 mm
Micrometer feed	0,5 mm
Block pitch accuracy	Range ≤ 310 mm: ±1,5 µm 310 < range ≤ 450 mm: ±2,5 µm 450 < range ≤ 610 mm: ±3,5 µm
Parallelism of blocks	Range ≤ 310 mm: 2 µm 310 < range ≤ 610 mm: 2,5 µm
Battery life	Approx. 1,8 years

Optional accessories

No.	Description
515-111	Auxiliary Block Kit for Bore Gauge, for 515-374/515-376/515-378
959149	Digimatic Cable, Straight, Data Button,, 1m
959150	Digimatic Cable, Straight, Data Button,, 2m
06AFM380C	USB Input Tool Direct (Digimatic USB), Digi/Digi2, Straight, with Data Button
02AZD880G	U-WAVE-T, Buzzer Type, Wireless Transmitter
02AZD730G	U-WAVE-T, IP67 Type, Wireless Transmitter
02AZD790C	U-WAVE-T Connection Cable C, Straight, with Data Button

Consumable spares

No.	Description
938882	Battery SR44 1.5V

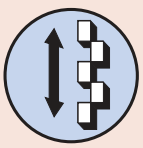

Staggered 20 mm blocks (movable)

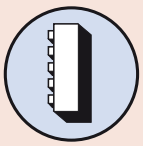

Vertical orientation

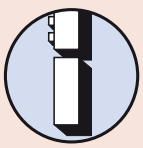

Riser block (optional)

All products to be sold to commercial customers.
Product illustrations are without obligation. Product descriptions, in particular any and all technical specifications, are only binding when explicitly agreed upon.

Height Masters

Series 515

This height master offers you the following benefits:

- You can use it to calibrate and set height gauges and other measuring instruments.
- Models with the staggered arrangement of blocks have two measuring faces on the same level, one facing up and the other down.
- It is supplied in a fitted wooden case.

Specifications

Graduation	0,001 mm
Micrometer adjustment	20 mm
Micrometer feed	0,5 mm
Block pitch accuracy	Range ≤ 310 mm: ±1.5 µm 310 < range ≤ 610 mm: ±2.5 µm 610 < range ≤ 1010 mm: ±3.5 µm
Parallelism of blocks	Range ≤ 610 mm: 1.5 µm 610 < range ≤ 1010 mm: 2 µm

Optional accessories

No.	Description
900574	Supporting Base for Vertical Operation, for Height Master
515-110	Auxiliary Block Kit for Bore Gauge, for 515-520/515-523

900574 : supplied as a standard for 515-523

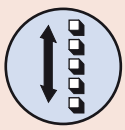

Single-row 10 mm blocks (movable)

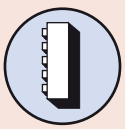

Vertical orientation

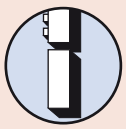

Riser block (optional)

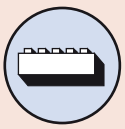

Horizontal orientation

900574 (optional)
Supporting base for vertical operation

515-520

Using in horizontal orientation

Metric

No.	Range [mm]	Block step	Feed error	Retrace error	Delivered	Mass [kg]
515-520	5 - 610	10 mm straight	±1,2 µm	1,2 µm	In a wooden case with certificate of inspection	45.0
515-523	5 - 1010	10 mm straight	±1,5 µm	1,5 µm	In a wooden case with certificate of inspection	63.5

All products to be sold to commercial customers.
Product illustrations are without obligation. Product descriptions, in particular any and all technical specifications, are only binding when explicitly agreed upon.

Universal Height Masters

Series 515

This Universal Height Master offers you the following benefits:

- It is designed for both vertical and horizontal orientations, enabling you to carry out a wide range of applications such as accuracy checking of machine tool table movements.
- It is supplied in a fitted wooden case.

515-322

Metric

No.	Range [mm]	Block step	Feed error	Retrace error	Delivered	Mass [kg]
515-322	5 - 310	20 mm staggered	±1 µm	1 µm	In a wooden case with certificate of inspection	23.0

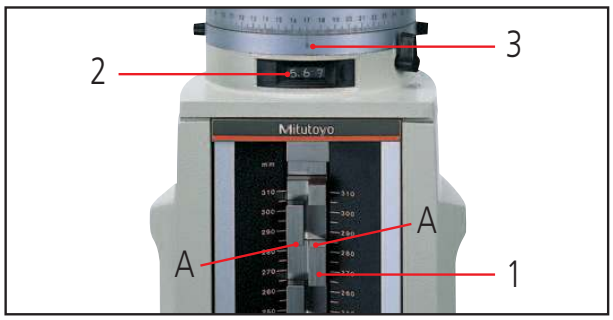

Height A
1. Scale 280.000 mm
2. Counter 5.670 mm
3. Thimble 0.000 mm

285.670 mm

Specifications

Graduation	0,001 mm
Micrometer adjustment	20 mm
Micrometer feed	0,5 mm
Block pitch accuracy	±1,5 µm
Parallelism of blocks	1 µm

Optional accessories

No.	Description
515-112	Auxiliary Block Kit for Bore Gauge, for 515-322

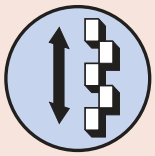

Staggered 20 mm blocks (movable)

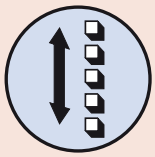

Single-row 10 mm blocks (movable)

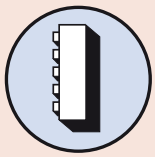

Vertical orientation

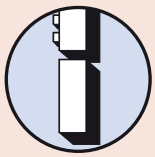

Riser block (optional)

All products to be sold to commercial customers.
Product illustrations are without obligation. Product descriptions, in particular any and all technical specifications, are only binding when explicitly agreed upon.

Optional Accessories for Height Master

Bore gage reference setting

Series 515

This is an auxiliary block kit that allows you to efficiently carry out reference-setting of dial bore gauges and tubular inside micrometers (18-150mm).

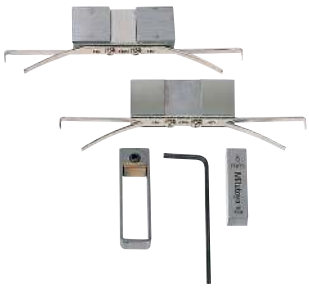

Metric

No.	Suitable for Height Master	Mass [g]
515-112	515-322	142
515-110	515-520 / 515-523	140
515-111	515-374 / 515-376 / 515-378	142

Sample application

Series 515

These riser blocks offer you the following benefits:

- You can extend the measuring range up to 900mm by using 150, 300 or 600mm riser blocks.
- They can be used with both standard and digital Height Masters.

515-113

515-114

515-115

Metric

No.	Accuracy	Parallelism	Height [mm]	Mass [kg]
515-113	±0,6 µm	0,6 µm	150 mm	5.7
515-114	±1,0 µm	0,8 µm	300 mm	11.3
515-115	±2,0 µm	1 µm	600 mm	31.0

All products to be sold to commercial customers.
Product illustrations are without obligation. Product descriptions, in particular any and all technical specifications, are only binding when explicitly agreed upon.

Mitutoyo

Depth Micro Checkers

Series 515

This Depth Micro Checker offers you the following benefits:

- The Depth Micro Checker is designed to let you check and help set the range-end points of a depth micrometer.
- A 25mm carbide gauge block is provided as the reference surface.

515-571

Specifications

Anvil block accuracy	±0,5 µm
Block pitch accuracy	±(1+L/150)µm L= lenght to check (mm)

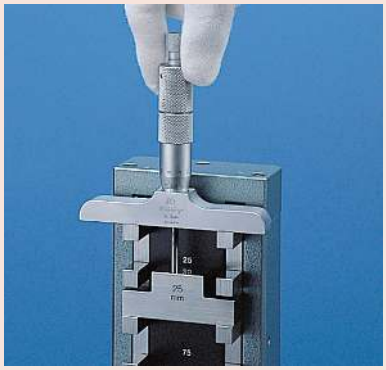

Metric

No.	Range [mm]	Reference length	Delivered	Mass [kg]
515-570	0 - 150	25, 50, 75, 100, 125, 150 mm	In a wooden case with certificate of inspection, 25 mm carbide reference block	3.0
515-571	0 - 300	25, 50, 75, 100, 125, 150, 175, 200, 225, 250, 275, 300 mm	In a wooden case with certificate of inspection, 25 mm carbide reference block	17.0

mm

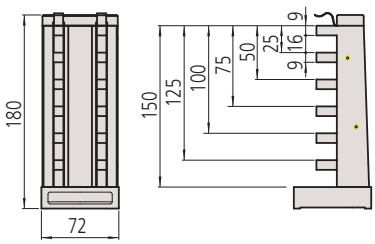

515-570

mm

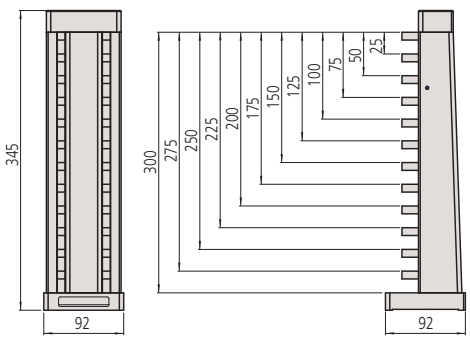

515-571

All products to be sold to commercial customers.
Product illustrations are without obligation. Product descriptions, in particular any and all technical specifications, are only binding when explicitly agreed upon.

CERA Caliper Checkers

Series 515

This CERA Caliper Checker offers you the following benefits:
- You can set and inspect caliper and height gauges.
- It comes with ceramic gauge blocks.

515-555

Specifications

Block pitch accuracy	20 - 300 mm: ±0,005 mm 350 - 600 mm: ±0,007 mm
Parallelism of blocks	20 - 300 mm: 0,002 mm 350 - 600 mm: 0,004 mm

Optional accessories

No.	Description
602162	Wooden Case (300 mm), for Caliper Checker
602164	Wooden Case (600 mm), for Caliper Checker

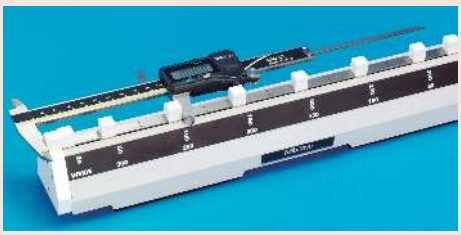

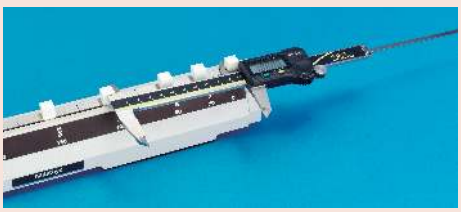

Metric

No.	Range [mm]	Reference checking lengths available for outside/ inside measurement	Delivered	Mass [kg]
515-555	0 - 300	20, 50, 100, 150, 200, 250 and 300 mm	In a paper case with certificate of inspection	4.0
515-556-2	0 - 600	20, 50, 100, 150, 200, 250, 300, 350, 400, 450, 500, 550 and 600 mm	In a paper case with certificate of inspection	8.5

515-555

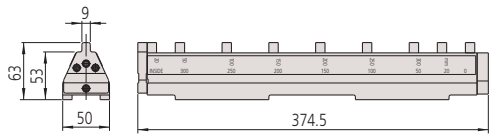

515-556-2

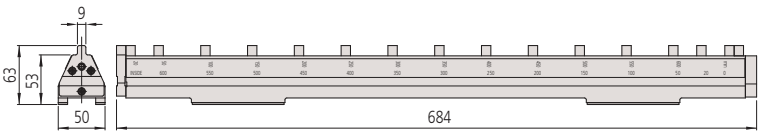

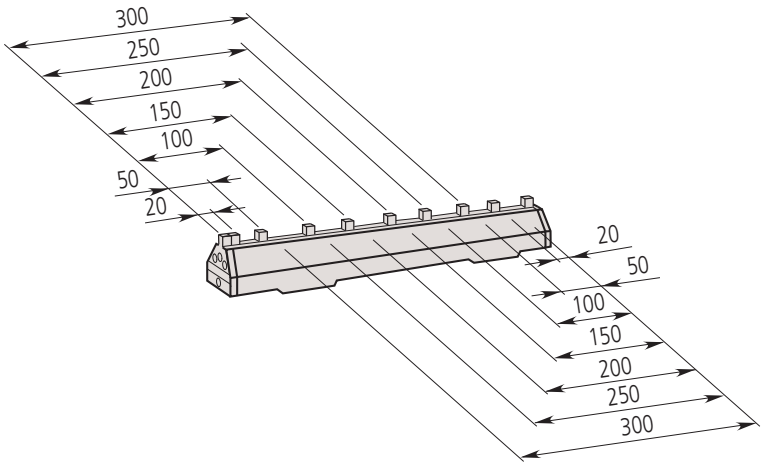

515-555

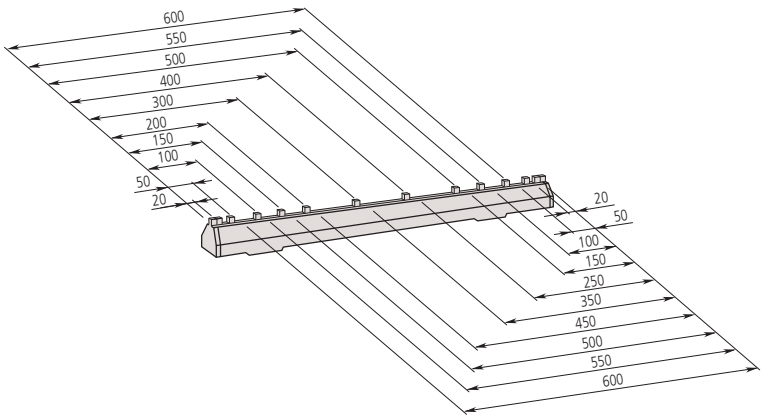

515-556-2

All products to be sold to commercial customers.
Product illustrations are without obligation. Product descriptions, in particular any and all technical specifications, are only binding when explicitly agreed upon.

Mitutoyo

Inside Micro Checkers

Series 515

This Inside Micro Checker offers you the following benefits:
- Applicable for Series 133, 139 and 145 (over 50 mm).
- Not applicable for Series 137, 141, 337 and 339
- It designed to act as a setting standard for inside micrometers.
- It comes with ceramic gauge blocks.

515-585

Specifications

Block pitch accuracy	±(1+L/150) µm L = Length to check (mm)

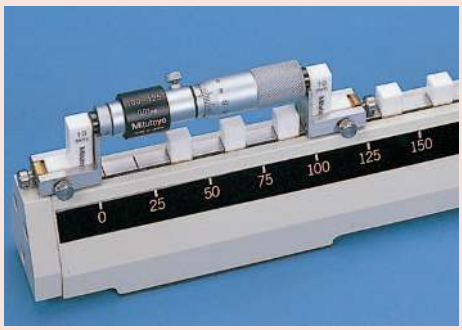

Application with Series 133

Metric

No.	Range [mm]	Reference length	Delivered	Mass [kg]
515-585	25 - 300	25, 50, 75, 100, 125, 150, 175, 200, 225, 250, 275, 300 mm	In a wooden case with certificate of inspection, support clamps, 2x 10 mm gauge block	3.9
515-586	25 - 600	25, 50, 75, 100, 125, 150, 175, 200, 225, 250, 275, 300, 325, 350, 375, 400, 425, 450, 475, 500, 525, 550, 575, 600 mm	In a wooden case with certificate of inspection, support clamps, 2x 10 mm gauge block	7.0

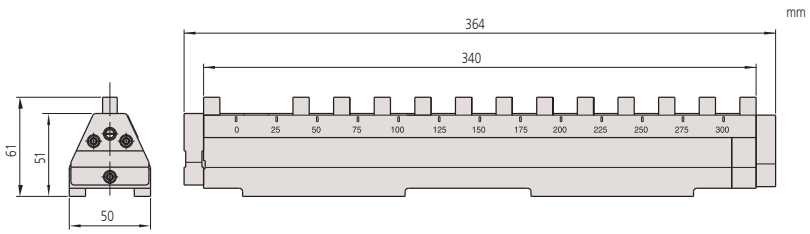

515-585

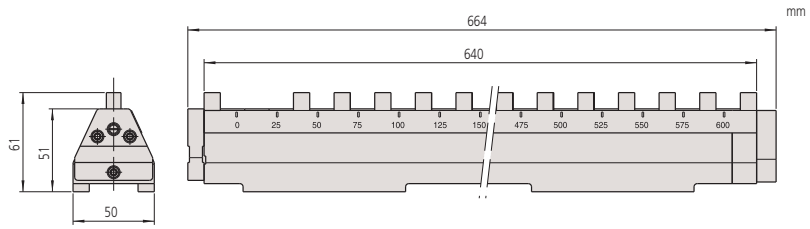

515-586

All products to be sold to commercial customers.
Product illustrations are without obligation. Product descriptions, in particular any and all technical specifications, are only binding when explicitly agreed upon.

Check Masters

Series 515

This Check Master allows you to test precision tool and coordinate measuring machines, and offers you the following benefits:

- You can test the X, Y and Z-coordinate axes of precision tool machines and coordinate measuring machines.
- It consists of rigidly clamped gauge blocks with a step of 10mm.
- It is supplied in a fitted wooden case.

Specifications

Block step	10 mm
Block pitch accuracy	Range ≤ 310 mm: ±2,5 µm 310 < range ≤ 610 mm: ±3,5 µm 610 < range ≤ 1010 mm: ±5,0 µm 1010 < range ≤ 1510 mm: ±8,0 µm
Parallelism of blocks	Range ≤ 310 mm: 1,2 µm 310 < range ≤ 610 mm: 1,5 µm 610 < range ≤ 1010 mm: 2,0 µm 1010 < range ≤ 1510 mm: 2,5 µm
Hardness	> 64 HRC

515-722

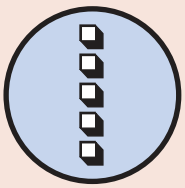

Single-row 10 mm blocks

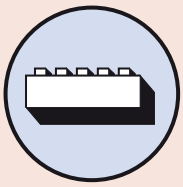

Horizontal orientation

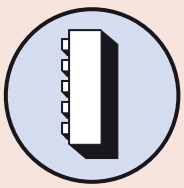

Vertical orientation

Metric

No.	Range [mm]	Delivered	Mass [kg]
515-720	0 - 310	In a wooden case with certificate of inspection	7.0
515-721	0 - 450	In a wooden case with certificate of inspection	10.0
515-722	0 - 610	In a wooden case with certificate of inspection	13.0
515-723	0 - 1010	In a wooden case with certificate of inspection	22.0
515-724	0 - 1510	In a wooden case with certificate of inspection	30.0

515-724 515-723 515-722

All products to be sold to commercial customers.
Product illustrations are without obligation. Product descriptions, in particular any and all technical specifications, are only binding when explicitly agreed upon.

Step Masters

Series 516

The Step Master is a gauge that provides you with four small increments in height and offers you the following benefits:

- It is constructed from an assembly of five highly accurate, steel or ceramic gauge blocks.
- Each adjacent step is calibrated to a resolution of 0,01 µm by using an interferometer with an accuracy tolerance of ±0,2 µm.

516-499 Ceramic type

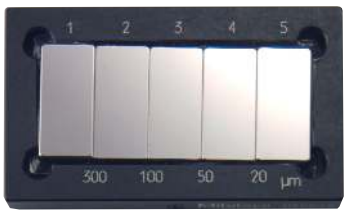

516-199 Steel type

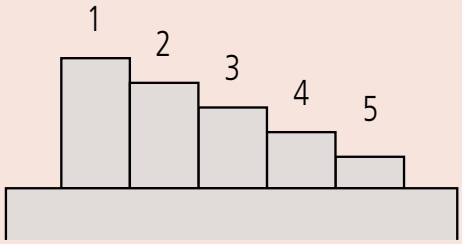

Step value

	1/2	2/3	3/4	4/5
516-198, 516-498	10 µm	5 µm	2 µm	1 µm
516-199, 516-499	300 µm	100 µm	50 µm	20 µm

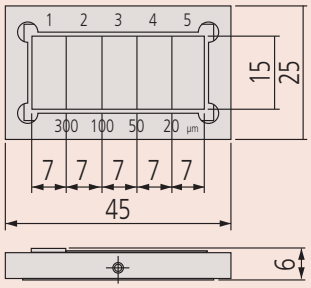

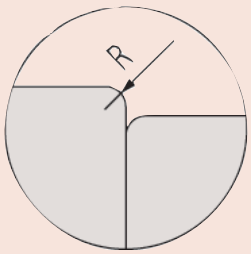

Metric

No.	Block step	Material	Delivered
516-198	10, 5, 2, 1 µm	Steel	In a wooden case with certificate of inspection
516-198-24	10, 5, 2, 1 µm	Steel	In a wooden case with JCSS calibration certificate
516-199	300, 100, 50, 20 µm	Steel	In a wooden case with certificate of inspection
516-199-24	300, 100, 50, 20 µm	Steel	In a wooden case with JCSS calibration certificate
516-498	10, 5, 2, 1 µm	Ceramic	In a wooden case with certificate of inspection
516-498-24	10, 5, 2, 1 µm	Ceramic	In a wooden case with JCSS calibration certificate
516-499	300, 100, 50, 20 µm	Ceramic	In a wooden case with certificate of inspection
516-499-24	300, 100, 50, 20 µm	Ceramic	In a wooden case with JCSS calibration certificate

Cylindrical Measuring Pins

Series 926

This is a complete incremental set of plug (or pin) gauges, that offers you the following benefits:

- It includes 91 or 273 pieces that you can use in the inspection room, or on the shop floor in tool and fixture making.

926-210

926-222

Specifications

Accuracy	DIN 2269
Finish	Very fine ground, from Ø 3 mm inscribed
Hardness	HRC 60-62
Roughness	RA ≤ 0,1 µm
Length [mm]	up to Ø 6 mm = 50 mm over Ø 6 mm = 70 mm

Set of 273 pieces

No.	Grade	Remarks	Delivered
926-210	1	1-10 mm, rising by 0,1 mm (91 pins). Each of these 91 pins are flanked by a +0,01 mm (oversize) and a -0,01 mm (undersize) pin.	In a wooden box
926-212	2	1-10 mm, rising by 0,1 mm (91 pins). Each of these 91 pins are flanked by a +0,01 mm (oversize) and a -0,01 mm (undersize) pin.	In a wooden box

Set of 91 pieces

No.	Grade	Remarks	Delivered
926-220	1	1-10 mm, rising by 0,1 mm	In a wooden box
926-222	2	1-10 mm, rising by 0,1 mm	In a wooden box

All products to be sold to commercial customers.
Product illustrations are without obligation. Product descriptions, in particular any and all technical specifications, are only binding when explicitly agreed upon.

Glass Scales

Specifications

Accuracy	(1,5+2L/1000) µm L = measured length (mm)
Material	Sodium glass
Thermal expansion coefficient	(8±1) x 10^{-6}/K

Series 182

These high precision glass scales offer you the following benefits:

- They are manufactured using Mitutoyo's leading-edge Linear Scale production technology.
- They are ideal for checking the magnification accuracy of profile projectors and microscopes, as well as the table feed accuracy of measuring equipment.

182-525-10 / 182-523-10 / 182-522-10 / 182-513-10

Metric

No.	Range [mm]	Graduation [mm]	Thickness of graduation line [µm]	Delivered	L [mm]	Mass [kg]
182-511-10	0 - 50	0,1	20	In a wooden case with certificate of inspection	75	0.23
182-512-10	0 - 100	0,1	20	In a wooden case with certificate of inspection	125	0.24
182-521-10	0 - 100	0,5	50	In a wooden case with certificate of inspection	130	0.27
182-513-10	0 - 150	0,1	20	In a wooden case with certificate of inspection	175	0.35
182-514-10	0 - 200	0,1	20	In a wooden case with certificate of inspection	225	0.36
182-522-10	0 - 200	0,5	50	In a wooden case with certificate of inspection	230	0.32
182-531-10	0 - 250	1	100	In a wooden case with certificate of inspection	280	0.55
182-523-10	0 - 300	0,5	50	In a wooden case with certificate of inspection	330	0.57
182-524-10	0 - 400	0,5	50	In a wooden case with certificate of inspection	430	0.71
182-525-10	0 - 500	0,5	50	In a wooden case with certificate of inspection	530	0.86
182-532-10	0 - 500	1	100	In a wooden case with certificate of inspection	530	0.86
182-533-10	0 - 750	1	100	In a wooden case with certificate of inspection	780	1.22
182-534-10	0 - 1000	1	100	In a wooden case with certificate of inspection	1030	1.54

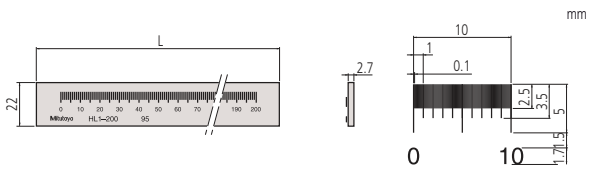

Graduation : 0,1 mm

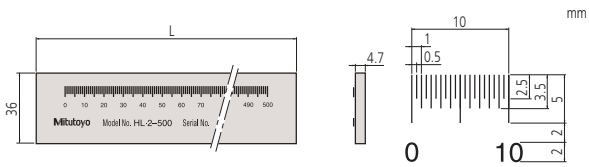

Graduation : 0,5 mm

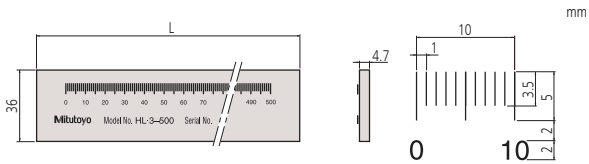

Graduation : 1 mm

All products to be sold to commercial customers.
Product illustrations are without obligation. Product descriptions, in particular any and all technical specifications, are only binding when explicitly agreed upon.

Low Expansion Glass Scales

Series 182

These high precision glass scales offer you the following benefits:

- They are manufactured using Mitutoyo's leading-edge Linear Scale production technology.
- You can use them as a standard for calibrating graduating scales, with high accuracy.

182-502-60
182-501-60

Metric

No.	Range [mm]	L [mm]	T [mm]	W [mm]	Delivered	Mass [kg]
182-501-50	0 - 250	280	10	20	In a wooden case with certificate of inspection	0.75
182-501-60	0 - 250	280	10	20	In a wooden case with JCSS calibration certificate	0.75
182-502-50	0 - 500	530	20	30	In a wooden case with certificate of inspection	1.8
182-502-60	0 - 500	530	20	30	In a wooden case with JCSS calibration certificate	1.8

mm

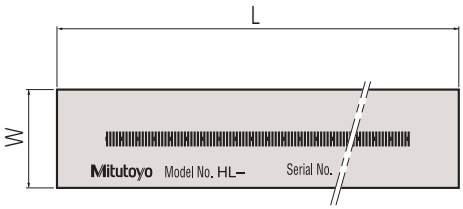

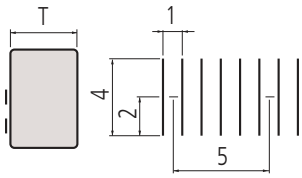

Specifications

Accuracy	(0,5+L/1000) µm L = measured length (mm)
Graduation	1 mm
Thickness of graduation line	4 µm
Material	Low expansion glass
Thermal expansion coefficient	(0±0,02) x 10^{-6}/K

All products to be sold to commercial customers.
Product illustrations are without obligation. Product descriptions, in particular any and all technical specifications, are only binding when explicitly agreed upon.

Calibration Testers

Series 170

This Calibration Tester offers you the following benefits:

- It enables you to test dial indicators, lever gauges and bore gauges with 0,01mm scale graduation.
- Bore gauges can be supported both horizontally and vertically.

170-102-12

Metric

No.	Range [mm]	Spindle feed error	Hysteresis	Delivered	Mass [kg]
170-102-12	0 - 25	±2 µm	0,5 µm	With holder **12AAK821**	7.5

Specifications

Graduation	0,001 mm
Measuring face	Carbide tipped, rotating
Clamping range	Ø 6/8 mm

Optional accessories

No.	Description
12AAK824	Horizontal Holder for Bore Gauge, For Series 170

Series 521

This allows the calibration of digital and analogue indicators, lever gauges and measuring probes with a maximum measuring span of 5mm.

521-105

Metric

No.	Range [mm]	Spindle feed error	Hysteresis	Mass [kg]
521-103	0 - 1	±0,2 µm	0,2 µm	7.0
521-105	0 - 5	±0,8 µm	0,8 µm	7.5

Specifications

Graduation	0,0002 mm
Measuring face	Carbide tipped, non rotating
Clamping range	Ø 4-10 mm

All products to be sold to commercial customers.
Product illustrations are without obligation. Product descriptions, in particular any and all technical specifications, are only binding when explicitly agreed upon.

Mitutoyo

Calibration Testers i-Checker 2000

Series 170

- i-Checker is specially designed to calibrate dial indicators, dial test indicators, bore gauges, electronic digital indicator gauges and other electronic gauges.
- Inspection can be performed 2,5 times faster compared to the previous model.
- This instrument achieves the high accuracy and therefore guarantees ultra-reliable inspection results.
- Digital indicators equipped with a data output function are checked very efficiently due to spindle positioning at the inspection points and recording of measurement results being under fully automatic control.
- Analog type indicators are inspected in semi-automatic mode with the pointer of the indicator being manually adjusted at each measuring point with automatic transfer of inspection results and movement to the next measuring point.

170-402D
with optional accessories

Metric

No.	Range [mm]	Digital step	Accuracy	Delivered	Mass
170-402D	0 - 100	0,01 µm	±(0,1+0,4L/100) µm L = measured length (mm)	With ø8 mm stem bush, software i-Pak, certificate of inspection	20 kg

Specifications

Accuracy	±(0,1+0,4L/100) µm L = measured length (mm)
Max. drive speed	10 mm/s
Drive method	Motor drive, semi automatic, fully automatic only for indicator with data output
Scale	Linear encoder
Power supply	100VAC to 240VAC ±10%, 50/60Hz
Dimensions (WxDxH)	196 x 205,5 x 599,5 mm
PC connection	USB

Optional accessories

No.	Description
02ASK000	Test Indicator Accessory Set, I-Checker, For Ø6mm Stem
02ASK180	Test Indicator Accessory Set, I-Checker, For Ø8mm Stem
02ASK040	Stem Bush for I-Checker, For Ø6mm Stem
02ASL150	Stem Bush for I-Checker, For ø10mm Stem
02ASK060	Stem Bush for I-Checker, For Ø12mm Stem
02ASK070	Stem Bush for I-Checker, For Ø15mm Stem
02ASK080	Stem Bush for I-Checker, For Ø20mm Stem
02ASK710	Stem Bush for I-Checker, For Ø28mm Stem
02ASK090	Stem Bush for I-Checker, For Ø**9,525mm** (3/8") Stem
02ASU162	Cylinder Gauge Set, IC-2000

Calibration of Dial Test Indicator (Lever Type) with optional accessories

All products to be sold to commercial customers.
Product illustrations are without obligation. Product descriptions, in particular any and all technical specifications, are only binding when explicitly agreed upon.

Gauge Block Comparators GBCD-250

Optional accessories

No.	Description
02ASQ953	GBPAK-ME V4.0, Software for GBCD-250
02ASF040	Heat Protection Shield, For GBCD-250
02ASP422	RS-232C Cable
02ASD130	Square Gauge Block Holder, For GBCD-210
601644	Cerastone for Gauge Blocks, 150x50x20mm
158-120	Optical Flat, 15mm, D=60mm, 0,1µm
516-650E	Maintenance Kit for Gauge Blocks
516-145-E2	Calibration Master for GB-Comparator, 11pcs., Refer to EA-10/02,

Series 565

This Manual Comparator with Dual Gauge Heads offers you the following benefits:

- It performs gauge block calibration according to EN ISO 3650.
- You can easily compare gauge blocks between 0,1 mm and 250 mm with reference gauge blocks.
- The upper and lower gauging heads give you of easy, high-accuracy measurement.

No.	Range [mm]	Resolution	Measuring unit	Measuring force [N]
565-151D-01	0,1 - 250	0,001 µm	Linear Gauge (upper, lower)	0,4 N (upper) 0,2 N (lower)

Gauge Block Comparators GBCD-100A

Optional accessories

No.	Description
601644	Cerastone for Gauge Blocks, 150x50x20mm
158-120	Optical Flat, 15mm, D=60mm, 0,1µm
516-650E	Maintenance Kit for Gauge Blocks
516-145-E2	Calibration Master for GB-Comparator, 11pcs., Refer to EA-10/02,

Series 565

- It performs gauge block calibration according to EN ISO 3650
- Measures the length of rectangular gauge blocks in the size range 0,5 mm to 100 mm. It automatically compares a test block with an appropriate reference gauge block.
- The compensation result is not affected by any warping of thinner gauge blocks due to the use of upper and lower gage heads (dual-head system).
- Measurement configuration: 1 cycle of automatic comparison measurement with a standard gauge block.

No.	Range [mm]	Resolution	Measuring unit	Measuring force [N]
565-160D-02	0.5 - 100	0,01 µm	Inductive probe (upper, lower)	1 N (upper) 0,6 N (lower)

All products to be sold to commercial customers.
Product illustrations are without obligation. Product descriptions, in particular any and all technical specifications, are only binding when explicitly agreed upon.

Mitutoyo

Steel Gauge Block Sets
Page 337

Steel Individual Gauge Blocks
Page 345

Ceramic Gauge Block Sets
Page 347

Ceramic Individual Gauge Blocks
Page 354

Special Gauge Blocks
Page 355

Accessories for Gauge Blocks
Page 357

All products to be sold to commercial customers.
Product illustrations are without obligation. Product descriptions, in particular any and all technical specifications, are only binding when explicitly agreed upon.

Steel Metric Gauge Block Sets Overview

Mitutoyo provides a wide selection of boxed sets of gauge blocks to meet the various needs of industry. Selecting the best set, or sets, to acquire usually depends on the accuracy required by the target applications, the level of convenience desired and the environmental conditions in which they will be used.

Steel 32-block set

Steel 33-block set

Steel 34-block set

Steel 46-block set

Steel 47-block set

Steel 56-block set

Steel 76-block set

Steel 87-block set

Steel 88-block set

Steel 103-block set

Steel 112-block set

All products to be sold to commercial customers.
Product illustrations are without obligation. Product descriptions, in particular any and all technical specifications, are only binding when explicitly agreed upon.

Steel Metric Gauge Block Sets
Grade K with ISO JCSS Certificate

Grade K with ISO JCSS Certificate

Calibration Certificate

Metric

No.	Blocks per set	Grade	Material	Set configuration
516-596-60	122	K	Steel	1,0005 mm (1 block) 1,001-1,009 mm (0,001 mm step / 9 blocks) 1,01-1,49 mm (0,01 mm step / 49 blocks) 1,6-1,9 mm (0,1 mm step / 4 blocks) 0,5-24,5 mm (0,5 mm step / 49 blocks) 30-100 mm (10 mm step / 8 blocks) 25, 75 mm (50 mm step / 2 blocks)
516-937-60	112	K	Steel	1,0005 mm (1 block) 1,001-1,009 mm (0,001 mm step / 9 blocks) 1,01-1,49 mm (0,01 mm step / 49 blocks) 0,5-24,5 mm (0,5 mm step / 49 blocks) 25-100 mm (25 mm step / 4 blocks)
516-941-60	103	K	Steel	1,005 mm (1 block) 1,01-1,49 mm (0,01 mm step / 49 blocks) 0,5-24,5 mm (0,5 mm step / 49 blocks) 25-100 mm (25 mm step / 4 blocks)
516-945-60	87	K	Steel	1,001-1,009 mm (0,001 mm step / 9 blocks) 1,01-1,49 mm (0,01 mm step / 49 blocks) 0,5-9,5 mm (0,5 mm step / 19 blocks) 10-100 mm (10 mm step / 10 blocks)
516-949-60	76	K	Steel	1,005 mm (1 block) 1,01-1,49 mm (0,01 mm step / 49 blocks) 0,5-9,5 mm (0,5 mm step / 19 blocks) 10-40 mm (10 mm step / 4 blocks) 50-100 mm (25 mm step / 3 blocks)
516-953-60	56	K	Steel	0,5 mm (1 block) 1,001-1,009 mm (0,001 mm step / 9 blocks) 1,01-1,09 mm (0,01 mm step / 9 blocks) 1,1-1,9 mm (0,1 mm step / 9 blocks) 1-24 mm (1 mm step / 24 blocks) 25-100 mm (25 mm step / 4 blocks)
516-957-60	47	K	Steel	1,005 mm (1 block) 1,01-1,09 mm (0,01 mm step / 9 blocks) 1,1-1,9 mm (0,1 mm step / 9 blocks) 1-24 mm (1 mm step / 24 blocks) 25-100 mm (25 mm step / 4 blocks)
516-961-60	47	K	Steel	1,005 mm (1 block) 1,01-1,09 mm (0,01 mm step / 19 blocks) 1,2-1,9 mm (0,1 mm step / 8 blocks) 1-9 mm (1 mm step / 9 blocks) 10-100 mm (10 mm step / 10 blocks)
516-994-60	46	K	Steel	1,001-1,009 mm (0,001 mm step / 9 blocks) 1,01-1,09 mm (0,01 mm step / 9 blocks) 1,1-1,9 mm (0,1 mm step / 9 blocks) 1-9 mm (1 mm step / 9 blocks) 10-100 mm (10 mm step / 10 blocks)
516-128-60	34	K	Steel	1,0005 mm (1 block) 1,001-1,009 mm (0,001 mm step / 9 blocks) 1,01-1,09 mm (0,01 mm step / 9 blocks) 1,1-1,9 mm (0,1 mm step / 9 blocks) 1-5 mm (1 mm step / 5 blocks) 10 mm (1 block)
516-965-60	32	K	Steel	1,005 mm (1 block) 1,01-1,09 mm (0,01 mm step / 9 blocks) 1,1-1,9 mm (0,1 mm step / 9 blocks) 1-9 mm (1 mm step / 9 blocks) 10-30 mm (10 mm step / 3 blocks) 60 mm (1 block)

Specifications

Accuracy	EN ISO 3650

JCSS Calibration Certificate

These Gauge Block Sets are delivered with a JCSS Certificate of Calibration (Japan Calibration Service System).
A JCSS Certificate of Calibration is comparable with e.g. DAkkS COFRAC, RVA or UKAS Certificate of Calibration.
This calibration result is accepted internationally.

All products to be sold to commercial customers.
Product illustrations are without obligation. Product descriptions, in particular any and all technical specifications, are only binding when explicitly agreed upon.

Steel Metric Gauge Block Sets
Grade 0 with ISO Inspection Certificate

Grade 0 with ISO Inspection Certificate

Inspection Certificate

Specifications

Accuracy	EN ISO 3650

Inspection Certificate

Grad K/0/1/2 Gauge Block Sets with JCSS Calibration Certificate (issued by the Mitutoyo JCSS accredited laboratory) see online.

Metric

No.	Blocks per set	Grade	Material	Set configuration
516-597-10	122	0	Steel	1,0005 mm (1 block) 1,001-1,009 mm (0,001 mm step / 9 blocks) 1,01-1,49 mm (0,01 mm step / 49 blocks) 1,6-1,9 mm (0,1 mm step / 4 blocks) 0,5-24,5 mm (0,5 mm step / 49 blocks) 30-100 mm (10 mm step / 8 blocks) 25, 75 mm (50 mm step / 2 blocks)
516-938-10	112	0	Steel	1,0005 mm (1 block) 1,001-1,009 mm (0,001 mm step / 9 blocks) 1,01-1,49 mm (0,01 mm step / 49 blocks) 0,5-24,5 mm (0,5 mm step / 49 blocks) 25-100 mm (25 mm step / 4 blocks)
516-942-10	103	0	Steel	1,005 mm (1 block) 1,01-1,49 mm (0,01 mm step / 49 blocks) 0,5-24,5 mm (0,5 mm step / 49 blocks) 25-100 mm (25 mm step / 4 blocks)
516-970-10	88	0	Steel	1,0005 mm (1 block) 1,001-1,009 mm (0,001 mm step / 9 blocks) 1,01-1,49 mm (0,01 mm step / 49 blocks) 0,5-9,5 mm (0,5 mm step / 19 blocks) 10-100 mm (10 mm step / 10 blocks)
516-946-10	87	0	Steel	1,001-1,009 mm (0,001 mm step / 9 blocks) 1,01-1,49 mm (0,01 mm step / 49 blocks) 0,5-9,5 mm (0,5 mm step / 19 blocks) 10-100 mm (10 mm step / 10 blocks)
516-950-10	76	0	Steel	1,005 mm (1 block) 1,01-1,49 mm (0,01 mm step / 49 blocks) 0,5-9,5 mm (0,5 mm step / 19 blocks) 10-40 mm (10 mm step / 4 blocks) 50-100 mm (25 mm step / 3 blocks)
516-954-10	56	0	Steel	0,5 mm (1 block) 1,001-1,009 mm (0,001 mm step / 9 blocks) 1,01-1,09 mm (0,01 mm step / 9 blocks) 1,1-1,9 mm (0,1 mm step / 9 blocks) 1-24 mm (1 mm step / 24 blocks) 25-100 mm (25 mm step / 4 blocks)
516-958-10	47	0	Steel	1,005 mm (1 block) 1,01-1,09 mm (0,01 mm step / 9 blocks) 1,1-1,9 mm (0,1 mm step / 9 blocks) 1-24 mm (1 mm step / 24 blocks) 25-100 mm (25 mm step / 4 blocks)
516-962-10	47	0	Steel	1,005 mm (1 block) 1,01-1,09 mm (0,01 mm step / 19 blocks) 1,2-1,9 mm (0,1 mm step / 8 blocks) 1-9 mm (1 mm step / 9 blocks) 10-100 mm (10 mm step / 10 blocks)
516-995-10	46	0	Steel	1,001-1,009 mm (0,001 mm step / 9 blocks) 1,01-1,09 mm (0,01 mm step / 9 blocks) 1,1-1,9 mm (0,1 mm step / 9 blocks) 1-9 mm (1 mm step / 9 blocks) 10-100 mm (10 mm step / 10 blocks)
516-129-10	34	0	Steel	1,0005 mm (1 block) 1,001-1,009 mm (0,001 mm step / 9 blocks) 1,01-1,09 mm (0,01 mm step / 9 blocks) 1,1-1,9 mm (0,1 mm step / 9 blocks) 1-5 mm (1 mm step / 5 blocks) 10 mm (1 block)
516-966-10	32	0	Steel	1,005 mm (1 block) 1,01-1,09 mm (0,01 mm step / 9 blocks) 1,1-1,9 mm (0,1 mm step / 9 blocks) 1-9 mm (1 mm step / 9 blocks) 10-30 mm (10 mm step / 3 blocks) 60 mm (1 block)

All products to be sold to commercial customers.
Product illustrations are without obligation. Product descriptions, in particular any and all technical specifications, are only binding when explicitly agreed upon.

Steel Metric Gauge Block Sets
Grade 1 with ISO Inspection Certificate

Grade 1 with ISO Inspection Certificate

Inspection Certificate

Metric

No.	Blocks per set	Grade	Material	Set configuration
516-598-10	122	1	Steel	1,0005 mm (1 block) 1,001-1,009 mm (0,001 mm step / 9 blocks) 1,01-1,49 mm (0,01 mm step / 49 blocks) 1,6-1,9 mm (0,1 mm step / 4 blocks) 0,5-24,5 mm (0,5 mm step / 49 blocks) 30-100 mm (10 mm step / 8 blocks) 25, 75 mm (50 mm step / 2 blocks)
516-939-10	112	1	Steel	1,0005 mm (1 block) 1,001-1,009 mm (0,001 mm step / 9 blocks) 1,01-1,49 mm (0,01 mm step / 49 blocks) 0,5-24,5 mm (0,5 mm step / 49 blocks) 25-100 mm (25 mm step / 4 blocks)
516-943-10	103	1	Steel	1,005 mm (1 block) 1,01-1,49 mm (0,01 mm step / 49 blocks) 0,5-24,5 mm (0,5 mm step / 49 blocks) 25-100 mm (25 mm step / 4 blocks)
516-971-10	88	1	Steel	1,0005 mm (1 block) 1,001-1,009 mm (0,001 mm step / 9 blocks) 1,01-1,49 mm (0,01 mm step / 49 blocks) 0,5-9,5 mm (0,5 mm step / 19 blocks) 10-100 mm (10 mm step / 10 blocks)
516-947-10	87	1	Steel	1,001-1,009 mm (0,001 mm step / 9 blocks) 1,01-1,49 mm (0,01 mm step / 49 blocks) 0,5-9,5 mm (0,5 mm step / 19 blocks) 10-100 mm (10 mm step / 10 blocks)
516-951-10	76	1	Steel	1,005 mm (1 block) 1,01-1,49 mm (0,01 mm step / 49 blocks) 0,5-9,5 mm (0,5 mm step / 19 blocks) 10-40 mm (10 mm step / 4 blocks) 50-100 mm (25 mm step / 3 blocks)
516-955-10	56	1	Steel	0,5 mm (1 block) 1,001-1,009 mm (0,001 mm step / 9 blocks) 1,01-1,09 mm (0,01 mm step / 9 blocks) 1,1-1,9 mm (0,1 mm step / 9 blocks) 1-24 mm (1 mm step / 24 blocks) 25-100 mm (25 mm step / 4 blocks)
516-959-10	47	1	Steel	1,005 mm (1 block) 1,01-1,09 mm (0,01 mm step / 9 blocks) 1,1-1,9 mm (0,1 mm step / 9 blocks) 1-24 mm (1 mm step / 24 blocks) 25-100 mm (25 mm step / 4 blocks)
516-963-10	47	1	Steel	1,005 mm (1 block) 1,01-1,09 mm (0,01 mm step / 19 blocks) 1,2-1,9 mm (0,1 mm step / 8 blocks) 1-9 mm (1 mm step / 9 blocks) 10-100 mm (10 mm step / 10 blocks)
516-996-10	46	1	Steel	1,001-1,009 mm (0,001 mm step / 9 blocks) 1,01-1,09 mm (0,01 mm step / 9 blocks) 1,1-1,9 mm (0,1 mm step / 9 blocks) 1-9 mm (1 mm step / 9 blocks) 10-100 mm (10 mm step / 10 blocks)
516-130-10	34	1	Steel	1,0005 mm (1 block) 1,001-1,009 mm (0,001 mm step / 9 blocks) 1,01-1,09 mm (0,01 mm step / 9 blocks) 1,1-1,9 mm (0,1 mm step / 9 blocks) 1-5 mm (1 mm step / 5 blocks) 10 mm (1 block)
516-967-10	32	1	Steel	1,005 mm (1 block) 1,01-1,09 mm (0,01 mm step / 9 blocks) 1,1-1,9 mm (0,1 mm step / 9 blocks) 1-9 mm (1 mm step / 9 blocks) 10-30 mm (10 mm step / 3 blocks) 60 mm (1 block)

Specifications

Accuracy	EN ISO 3650

Inspection Certificate

Grad K/0/1/2 Gauge Block Sets with JCSS Calibration Certificate (issued by the Mitutoyo JCSS accredited laboratory) see online.

All products to be sold to commercial customers.
Product illustrations are without obligation. Product descriptions, in particular any and all technical specifications, are only binding when explicitly agreed upon.

Steel Metric Gauge Block Sets
Grade 2 with ISO Inspection Certificate

Specifications

Accuracy	EN ISO 3650

Inspection Certificate

Grad K/0/1/2 Gauge Block Sets with JCSS Calibration Certificate (issued by the Mitutoyo JCSS accredited laboratory) see online.

Grade 2 with ISO Inspection Certificate

Inspection Certificate

Metric

No.	Blocks per set	Grade	Material	Set configuration
516-599-10	122	2	Steel	1,0005 mm (1 block) 1,001-1,009 mm (0,001 mm step / 9 blocks) 1,01-1,49 mm (0,01 mm step / 49 blocks) 1,6-1,9 mm (0,1 mm step / 4 blocks) 0,5-24,5 mm (0,5 mm step / 49 blocks) 30-100 mm (10 mm step / 8 blocks) 25, 75 mm (50 mm step / 2 blocks)
516-940-10	112	2	Steel	1,0005 mm (1 block) 1,001-1,009 mm (0,001 mm step / 9 blocks) 1,01-1,49 mm (0,01 mm step / 49 blocks) 0,5-24,5 mm (0,5 mm step / 49 blocks) 25-100 mm (25 mm step / 4 blocks)
516-944-10	103	2	Steel	1,005 mm (1 block) 1,01-1,49 mm (0,01 mm step / 49 blocks) 0,5-24,5 mm (0,5 mm step / 49 blocks) 25-100 mm (25 mm step / 4 blocks)
516-972-10	88	2	Steel	1,0005 mm (1 block) 1,001-1,009 mm (0,001 mm step / 9 blocks) 1,01-1,49 mm (0,01 mm step / 49 blocks) 0,5-9,5 mm (0,5 mm step / 19 blocks) 10-100 mm (10 mm step / 10 blocks)
516-948-10	87	2	Steel	1,001-1,009 mm (0,001 mm step / 9 blocks) 1,01-1,49 mm (0,01 mm step / 49 blocks) 0,5-9,5 mm (0,5 mm step / 19 blocks) 10-100 mm (10 mm step / 10 blocks)
516-952-10	76	2	Steel	1,005 mm (1 block) 1,01-1,49 mm (0,01 mm step / 49 blocks) 0,5-9,5 mm (0,5 mm step / 19 blocks) 10-40 mm (10 mm step / 4 blocks) 50-100 mm (25 mm step / 3 blocks)
516-956-10	56	2	Steel	0,5 mm (1 block) 1,001-1,009 mm (0,001 mm step / 9 blocks) 1,01-1,09 mm (0,01 mm step / 9 blocks) 1,1-1,9 mm (0,1 mm step / 9 blocks) 1-24 mm (1 mm step / 24 blocks) 25-100 mm (25 mm step / 4 blocks)
516-960-10	47	2	Steel	1,005 mm (1 block) 1,01-1,09 mm (0,01 mm step / 9 blocks) 1,1-1,9 mm (0,1 mm step / 9 blocks) 1-24 mm (1 mm step / 24 blocks) 25-100 mm (25 mm step / 4 blocks)
516-964-10	47	2	Steel	1,005 mm (1 block) 1,01-1,09 mm (0,01 mm step / 19 blocks) 1,2-1,9 mm (0,1 mm step / 8 blocks) 1-9 mm (1 mm step / 9 blocks) 10-100 mm (10 mm step / 10 blocks)
516-997-10	46	2	Steel	1,001-1,009 mm (0,001 mm step / 9 blocks) 1,01-1,09 mm (0,01 mm step / 9 blocks) 1,1-1,9 mm (0,1 mm step / 9 blocks) 1-9 mm (1 mm step / 9 blocks) 10-100 mm (10 mm step / 10 blocks)
516-131-10	34	2	Steel	1,0005 mm (1 block) 1,001-1,009 mm (0,001 mm step / 9 blocks) 1,01-1,09 mm (0,01 mm step / 9 blocks) 1,1-1,9 mm (0,1 mm step / 9 blocks) 1-5 mm (1 mm step / 5 blocks) 10 mm (1 block)
516-968-10	32	2	Steel	1,005 mm (1 block) 1,01-1,09 mm (0,01 mm step / 9 blocks) 1,1-1,9 mm (0,1 mm step / 9 blocks) 1-9 mm (1 mm step / 9 blocks) 10-30 mm (10 mm step / 3 blocks) 60 mm (1 block)

All products to be sold to commercial customers.
Product illustrations are without obligation. Product descriptions, in particular any and all technical specifications, are only binding when explicitly agreed upon.

Steel Gauge Blocks - Thin Block Sets with 0,001/0,05 mm step and ISO Inspection Certificate

With ISO Inspection Certificate

Inspection Certificate

Specifications

Accuracy	EN ISO 3650

Inspection Certificate

Grad K/0/1/2 Gauge Block Sets with JCSS Calibration Certificate (issued by the Mitutoyo JCSS accredited laboratory) see online.

Metric

No.	Blocks per set	Grade	Material	Set configuration
516-974-10	18	0	Steel	0,991-0,999 mm (0,001 mm step / 9 blocks) 1,001-1,009 mm (0,001 mm step / 9 blocks)
516-975-10	18	1	Steel	0,991-0,999 mm (0,001 mm step / 9 blocks) 1,001-1,009 mm (0,001 mm step / 9 blocks)
516-976-10	18	2	Steel	0,991-0,999 mm (0,001 mm step / 9 blocks) 1,001-1,009 mm (0,001 mm step / 9 blocks)
516-982-10	9	0	Steel	1,001-1,009 mm (0,001 mm step / 9 blocks)
516-983-10	9	1	Steel	1,001-1,009 mm (0,001 mm step / 9 blocks)
516-984-10	9	2	Steel	1,001-1,009 mm (0,001 mm step / 9 blocks)
516-986-10	9	0	Steel	0,991-0,999 mm (0,001 mm step / 9 blocks)
516-987-10	9	1	Steel	0,991-0,999 mm (0,001 mm step / 9 blocks)
516-988-10	9	2	Steel	0,991-0,999 mm (0,001 mm step / 9 blocks)
516-990-10	9	0	Steel	0,10-0,50 mm (0,05 mm step / 9 blocks)
516-991-10	9	1	Steel	0,10-0,50 mm (0,05 mm step / 9 blocks)
516-992-10	9	2	Steel	0,10-0,50 mm (0,05 mm step / 9 blocks)

Steel Blocks - Long Block Sets with ISO Inspection Certificate

With ISO Inspection Certificate

Inspection Certificate

Specifications

Accuracy	EN ISO 3650

Inspection Certificate

Grad K/0/1/2 Gauge Block Sets with JCSS Calibration Certificate (issued by the Mitutoyo JCSS accredited laboratory) see online.

Metric

No.	Blocks per set	Grade	Material	Set configuration
516-702-10	8	0	Steel	125-175 mm (25 mm step / 3 blocks) 200-250 mm (50 mm step / 2 blocks) 300-500 mm (100 mm step / 3 blocks)
516-703-10	8	1	Steel	125-175 mm (25 mm step / 3 blocks) 200-250 mm (50 mm step / 2 blocks) 300-500 mm (100 mm step / 3 blocks)
516-704-10	8	2	Steel	125-175 mm (25 mm step / 3 blocks) 200-250 mm (50 mm step / 2 blocks) 300-500 mm (100 mm step / 3 blocks)

All products to be sold to commercial customers.
Product illustrations are without obligation. Product descriptions, in particular any and all technical specifications, are only binding when explicitly agreed upon.

Carbide Wear Block Sets Metric ISO Standard

Specifications

Accuracy	EN ISO 3650

Inspection Certificate

Wear Block Sets Metric with ISO Inspection Certificate

Inspection Certificate

This set is made up of two gauge blocks and offers you the following benefits:

- Wear-resistant even with frequent use of individual gauge blocks

Metric

No.	Blocks per set	Grade	Material	Set configuration
516-807-10	2	0	Carbide	1 mm (2 blocks)
516-806-10	2	1	Carbide	1 mm (2 blocks)
516-803-10	2	0	Carbide	2 mm (2 blocks)
516-802-10	2	1	Carbide	2 mm (2 blocks)

Steel Caliper Inspection Sets Metric

Specifications

Accuracy	Accuracy EN ISO 3650

Caliper Inspection Sets Metric

Inspection Certificate

516-527-10

516-124-10

Metric

No.	Blocks per set	Grade	Material	Calibration/Standard applications	Set configuration
516-124-10	3	1	Steel	DIN 862 (1988) VDI/VDE/DGQ 2618	3pcs.: 30, 41,3, 131,4 mm, Setting ring (ø4 mm, ø25 mm), Glove
516-125-10	3	2	Steel	DIN 862 (1988) VDI/VDE/DGQ 2618	3pcs.: 30, 41,3, 131,4 mm, Setting ring (ø4 mm, ø25 mm), Glove
516-526-10	4	1	Steel	EN ISO 13385-1	4pcs.: 10, 30, 50, 125 mm, Setting ring (ø4 mm, ø10 mm), Pin gage (ø10 mm), Glove
516-527-10	4	2	Steel	EN ISO 13385-1	4pcs.: 10, 30, 50, 125 mm, Setting ring (ø4 mm, ø10 mm), Pin gage (ø10 mm), Glove

All products to be sold to commercial customers.
Product illustrations are without obligation. Product descriptions, in particular any and all technical specifications, are only binding when explicitly agreed upon.

Steel Micrometer Inspection Sets Metric

Series 516 - Micro Checker

- For securely holding a stack of gauge blocks to be used for micrometer inspection.
- Can be used vertically and horizontally.
- Parallelism of micrometer measuring faces is checked by optical parallel which can be attached.

516-607

516-607 with optional gauge blocks

Metric

Micro Checker (stand only)

No.	Applicable gauge block sets	Applicable gauge block size [mm]
516-607	516-106-xx, 516-107-xx, 516-108-xx, 516-156-xx, 516-157-xx, 516-158-xx	2,5 / 5,1 / 7,7 / 10,3 / 12,9 / 15 / 17,6 / 20,2 / 22,8 / 25

Micrometer Inspection Sets Metric

Inspection Certificate

Specifications

Accuracy	EN ISO 3650

Grad K/0/1/2 Gauge Block Sets with JCSS Calibration Certificate (issued by the Mitutoyo JCSS accredited laboratory) see online.

Metric

With inspection certificate

No.	Blocks per set	Grade	Material	Calibration/Standard applications	Set configuration
516-580-10	10	0	Steel	For Micrometer with 2 mm spindle pitch. (QuantuMike)	2,2, 4,8, 7,8, 10,4, 12, 15,2, 17,4, 19,6, 22,6, 25 mm
516-581-10	10	1	Steel	For Micrometer with 2 mm spindle pitch. (QuantuMike)	2,2, 4,8, 7,8, 10,4, 12, 15,2, 17,4, 19,6, 22,6, 25 mm
516-582-10	10	2	Steel	For Micrometer with 2 mm spindle pitch. (QuantuMike)	2,2, 4,8, 7,8, 10,4, 12, 15,2, 17,4, 19,6, 22,6, 25 mm
516-106-10	10	0	Steel	EN ISO 3611 DIN 863 (1999) VDI/VDE/DGQ 2618	2,5, 5,1, 7,7, 10,3, 12,9, 15, 17,6, 20,2, 22,8, 25 mm, Optical parallel (t = 12 mm)
516-107-10	10	1	Steel	EN ISO 3611 DIN 863 (1999) VDI/VDE/DGQ 2618	2,5, 5,1, 7,7, 10,3, 12,9, 15, 17,6, 20,2, 22,8, 25 mm, Optical parallel (t = 12 mm)
516-108-10	10	2	Steel	EN ISO 3611 DIN 863 (1999) VDI/VDE/DGQ 2618	2,5, 5,1, 7,7, 10,3, 12,9, 15, 17,6, 20,2, 22,8, 25 mm, Optical parallel (t = 12 mm)
516-135-10	10	0	Steel	EN ISO 3611 DIN 863 (1999) VDI/VDE/DGQ 2618	2,5, 5,1, 7,7, 10,3, 12,9, 15, 17,6, 20,2, 22,8, 25 mm, Micro Checker, Optical parallel (t = 12 mm)
516-136-10	10	1	Steel	EN ISO 3611 DIN 863 (1999) VDI/VDE/DGQ 2618	2,5, 5,1, 7,7, 10,3, 12,9, 15, 17,6, 20,2, 22,8, 25 mm, Micro Checker, Optical parallel (t = 12 mm)
516-137-10	10	2	Steel	EN ISO 3611 DIN 863 (1999) VDI/VDE/DGQ 2618	2,5, 5,1, 7,7, 10,3, 12,9, 15, 17,6, 20,2, 22,8, 25 mm, Micro Checker, Optical parallel (t = 12 mm)

All products to be sold to commercial customers.
Product illustrations are without obligation. Product descriptions, in particular any and all technical specifications, are only binding when explicitly agreed upon.

Steel Metric Individual Gauge Blocks

Specifications

Accuracy	EN ISO 3650
Delivered	Foamed material 0.1-500 mm in a wooden case 600-1000 mm

Suffix No. (-XXX)
for Selecting Certificate Provided

ISO/DIN/JIS

Suffix No.	Grade	Inspection Certificate	Calibration Certificate JCSS
-016	K	O	O
-021	0	O	—
-026	0	O	O
-031	1	O	—
-036	1	O	O
-041	2	O	—
-046	2	O	O

Inspection Certificate

JCSS Calibration Certificate

These Gauge Block Sets are delivered with a JCSS Certificate of Calibration (Japan Calibration Service System).
A JCSS Certificate of Calibration is comparable with e.g. DAkkS COFRAC, RVA or UKAS Certificate of Calibration.
This calibration result is accepted internationally.

Metric Blocks ≤ 1,19 mm

Ordering example: To order a 0,1mm ISO Standard grade 1 block with JCSS calibration certificate, choose No. 611821-036.

Calibration Certificate

Inspection Certificate

Length [mm]	No.
0,1	611821
0,11	611860
0,12	611861
0,13	611862
0,14	611863
0,15	611822
0,16	611864
0,17	611865
0,18	611866
0,19	611867
0,2	611823
0,21	611868
0,22	611869
0,23	611870
0,24	611871
0,25	611824
0,26	611872
0,27	611873
0,28	611874
0,29	611875
0,3	611825
0,31	611876
0,32	611877
0,33	611878
0,34	611879
0,35	611826
0,36	611880
0,37	611881
0,38	611882
0,39	611883
0,4	611827
0,41	611884
0,42	611885
0,43	611886
0,44	611887
0,45	611828
0,46	611888
0,47	611889
0,48	611890
0,49	611891
0,5	611506
0,51	611892
0,52	611893

Length [mm]	No.
0,53	611894
0,54	611895
0,55	611896
0,56	611897
0,57	611898
0,58	611899
0,59	611900
0,6	611901
0,61	611902
0,62	611903
0,63	611904
0,64	611905
0,65	611906
0,66	611907
0,67	611908
0,68	611909
0,69	611910
0,7	611911
0,71	611912
0,72	611913
0,73	611914
0,74	611915
0,75	611916
0,76	611917
0,77	611918
0,78	611919
0,79	611920
0,8	611921
0,81	611922
0,82	611923
0,83	611924
0,84	611925
0,85	611926
0,86	611927
0,87	611928
0,88	611929
0,89	611930
0,9	611931
0,91	611932
0,92	611933
0,93	611934
0,94	611935
0,95	611936

Length [mm]	No.
0,96	611937
0,97	611938
0,98	611939
0,99	611940
0,991	611551
0,992	611552
0,993	611553
0,994	611554
0,995	611555
0,996	611556
0,997	611557
0,998	611558
0,999	611559
1	611611
1,0005	611520
1,001	611521
1,002	611522
1,003	611523
1,004	611524
1,005	611525
1,006	611526
1,007	611527
1,008	611528
1,009	611529
1,01	611561
1,02	611562
1,03	611563
1,04	611564
1,05	611565
1,06	611566
1,07	611567
1,08	611568
1,09	611569
1,1	611570
1,11	611571
1,12	611572
1,13	611573
1,14	611574
1,15	611575
1,16	611576
1,17	611577
1,18	611578
1,19	611579

All products to be sold to commercial customers.
Product illustrations are without obligation. Product descriptions, in particular any and all technical specifications, are only binding when explicitly agreed upon.

Steel Metric Individual Gauge Blocks

Metric Blocks ≤ 1000 mm

Ordering example: To order a 1,2 mm ISO Standard grade K block with JCSS calibration certificate, choose 611580-016.

Inspection Certificate

Calibration Certificate

Length [mm]	No.
1,2	611580
1,21	611581
1,22	611582
1,23	611583
1,24	611584
1,25	611585
1,26	611586
1,27	611587
1,28	611588
1,29	611589
1,3	611590
1,31	611591
1,32	611592
1,33	611593
1,34	611594
1,35	611595
1,36	611596
1,37	611597
1,38	611598
1,39	611599
1,4	611600
1,41	611601
1,42	611602
1,43	611603
1,44	611604
1,45	611605
1,46	611606
1,47	611607
1,48	611608
1,49	611609
1,5	611641
1,6	611516
1,7	611517
1,8	611518
1,9	611519
2	611612
2,0005	611690
2,001	611691
2,002	611692
2,003	611693
2,004	611694
2,005	611695
2,006	611696
2,007	611697
2,008	611698
2,009	611699
2,01	611701
2,02	611702
2,03	611703
2,04	611704
2,05	611705
2,06	611706
2,07	611707
2,08	611708
2,09	611709
2,1	611710
2,11	611711
2,12	611712
2,13	611713
2,14	611714

Length [mm]	No.
2,15	611715
2,16	611716
2,17	611717
2,18	611718
2,19	611719
2,2	611720
2,21	611721
2,22	611722
2,23	611723
2,24	611724
2,25	611725
2,26	611726
2,27	611727
2,28	611728
2,29	611729
2,3	611730
2,31	611731
2,32	611732
2,33	611733
2,34	611734
2,35	611735
2,36	611736
2,37	611737
2,38	611738
2,39	611739
2,4	611740
2,41	611741
2,42	611742
2,43	611743
2,44	611744
2,45	611745
2,46	611746
2,47	611747
2,48	611748
2,49	611749
2,5	611642
2,6	611750
2,7	611751
2,8	611752
2,9	611753
3	611613
3,5	611643
4	611614
4,5	611644
5	611615
5,1	611850
5,5	611645
6	611616
6,5	611646
7	611617
7,5	611647
7,7	611851
8	611618
8,5	611648
9	611619
9,5	611649
10	611671
10,3	611852
10,5	611650
11	611621

Length [mm]	No.
11,5	611651
12	611622
12,5	611652
12,9	611853
13	611623
13,5	611653
14	611624
14,5	611654
15	611625
15,5	611655
16	611626
16,5	611656
17	611627
17,5	611657
17,6	611854
18	611628
18,5	611658
19	611629
19,5	611659
20	611672
20,2	611855
20,5	611660
21	611631
21,5	611661
22	611632
22,5	611662
22,8	611856
23	611633
23,5	611663
24	611634
24,5	611664
25	611635
25,25	611754
30	611673
35	611755
40	611674
41,3	611857
45	611756
50	611675
60	611676
70	611677
75	611801
80	611678
90	611679
100	611681
125	611802
131,4	611858
150	611803
175	611804
200	611682
250	611805
300	611683
400	611684
500	611685
600	611840
700	611841
750	611842
800	611843
900	611844
1000	611845

Suffix No. (-XXX) for Selecting Certificate Provided

ISO/DIN/JIS

Suffix No.	Grade	Inspection Certificate	Calibration Certificate JCSS
-016	K	O	O
-021	0	O	—
-026	0	O	O
-031	1	O	—
-036	1	O	O
-041	2	O	—
-046	2	O	O

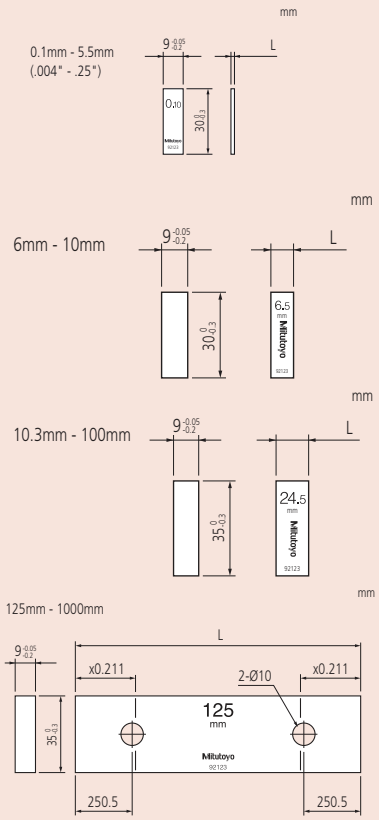

All products to be sold to commercial customers.
Product illustrations are without obligation. Product descriptions, in particular any and all technical specifications, are only binding when explicitly agreed upon.

Ceramic Metric Gauge Block Sets Overview

Mitutoyo provides a wide selection of boxed sets of gauge blocks to meet the various needs of industry. Selecting the best set, or sets, to acquire usually depends on the accuracy required by the target applications, the level of convenience desired and the environmental conditions in which they will be used.

CERA 32-block set

CERA 34-block set

CERA 46-block set

CERA 47-block set

CERA 56-block set

CERA 76-block set

CERA 103-block set

CERA 112-block set

All products to be sold to commercial customers.
Product illustrations are without obligation. Product descriptions, in particular any and all technical specifications, are only binding when explicitly agreed upon.

Ceramic Gauge Block Sets Grade 0 with Inspection Certificate

Grade 0 with Inspection Certificate

Inspection Certificate

Metric

No.	Blocks per set	Grade	Material	Set configuration
516-338-10	112	0	Ceramic	1,0005 mm (1 block) 1,001-1,009 mm (0,001 mm step / 9 blocks) 1,01-1,49 mm (0,01 mm step / 49 blocks) 0,5-24,5 mm (0,5 mm step / 49 blocks) 25-100 mm (25 mm step / 4 blocks)
516-342-10	103	0	Ceramic	1,005 mm (1 block) 1,01-1,49 mm (0,01 mm step / 49 blocks) 0,5-24,5 mm (0,5 mm step / 49 blocks) 25-100 mm (25 mm step / 4 blocks)
516-370-10	88	0	Ceramic	1,0005 mm (1 block) 1,001-1,009 mm (0,001 mm step / 9 blocks) 1,01-1,49 mm (0,01 mm step / 49 blocks) 0,5-9,5 mm (0,5 mm step / 19 blocks) 10-100 mm (10 mm step / 10 blocks)
516-346-10	87	0	Ceramic	1,001-1,009 mm (0,001 mm step / 9 blocks) 1,01-1,49 mm (0,01 mm step / 49 blocks) 0,5-9,5 mm (0,5 mm step / 19 blocks) 10-100 mm (10 mm step / 10 blocks)
516-350-10	76	0	Ceramic	1,005 mm (1 block) 1,01-1,49 mm (0,01 mm step / 49 blocks) 0,5-9,5 mm (0,5 mm step / 19 blocks) 10-40 mm (10 mm step / 4 blocks) 50-100 mm (25 mm step / 3 blocks)
516-354-10	56	0	Ceramic	0,5 mm (1 block) 1,001-1,009 mm (0,001 mm step / 9 blocks) 1,01-1,09 mm (0,01 mm step / 9 blocks) 1,1-1,9 mm (0,1 mm step / 9 blocks) 1-24 mm (1 mm step / 24 blocks) 25-100 mm (25 mm step / 4 blocks)
516-358-10	47	0	Ceramic	1,005 mm (1 block) 1,01-1,09 mm (0,01 mm step / 9 blocks) 1,1-1,9 mm (0,1 mm step / 9 blocks) 1-24 mm (1 mm step / 24 blocks) 25-100 mm (25 mm step / 4 blocks)
516-362-10	47	0	Ceramic	1,005 mm (1 block) 1,01-1,09 mm (0,01 mm step / 19 blocks) 1,2-1,9 mm (0,1 mm step / 8 blocks) 1-9 mm (1 mm step / 9 blocks) 10-100 mm (10 mm step / 10 blocks)
516-395-10	46	0	Ceramic	1,001-1,009 mm (0,001 mm step / 9 blocks) 1,01-1,09 mm (0,01 mm step / 9 blocks) 1,1-1,9 mm (0,1 mm step / 9 blocks) 1-9 mm (1 mm step / 9 blocks) 10-100 mm (10 mm step / 10 blocks)
516-179-10	34	0	Ceramic	1,0005 mm (1 block) 1,001-1,009 mm (0,001 mm step / 9 blocks) 1,01-1,09 mm (0,01 mm step / 9 blocks) 1,1-1,9 mm (0,1 mm step / 9 blocks) 1-5 mm (1 mm step / 5 blocks) 10 mm (1 block)
516-366-10	32	0	Ceramic	1,005 mm (1 block) 1,01-1,09 mm (0,01 mm step / 9 blocks) 1,1-1,9 mm (0,1 mm step / 9 blocks) 1-9 mm (1 mm step / 9 blocks) 10-30 mm (10 mm step / 3 blocks) 60 mm (1 block)

Specifications

Accuracy	EN ISO 3650

Mitutoyo

Certificate number T06E10369
page 1 of 1

CERTIFICATE OF INSPECTION

Instrument: Gauge Block
Grade: 0 (ASME)
Date of inspection: 18th May. 2006
Unit : μ inch

Nominal Length inch	Ident. No.	Central Deviation	Maximum Deviation	Minimum Deviation	Variation
1	06280	-0.4	+1.2	-0.4	1.6

ENVIRONMENT: Air temperature (68 ± 1.8)°F [(20 ± 1.0) °C]
BASIS OF TEST: ASME B89.1.9-2002
MATERIAL: Steel
INSPECTION METHOD: by comparator
COEFFICIENT OF THERMAL EXPANSION: (6.0±0.3)×10-6/°F [(10.8±0.5)×10-6/K]
EXPANDED UNCERTAINTY (For Central Deviation) (k=2): 4" or less 2.4 μ inch; Up to20" (1.2 + L / 2.3) μ inch; (L:Nominal length) L:inch
QUALITY SYSTEM: ISO 9001 Registered Firm : JQA JN0189
TRACEABILITY: Traceable to NIST No.821/268834-03 (NIST=National Institute of Standard and Technology)

Date 18th May. 2006

S. Shirai

Inspection certificate

Grad K/0/1/2 Gauge Block Sets with JCSS Calibration Certificate (issued by the Mitutoyo JCSS accredited laboratory) see online.

All products to be sold to commercial customers.
Product illustrations are without obligation. Product descriptions, in particular any and all technical specifications, are only binding when explicitly agreed upon.

Ceramic Gauge Block Sets Grade 1 with Inspection Certificate

Grade 1 with Inspection Certificate

Inspection Certificate

Specifications

Accuracy	EN ISO 3650

Mitutoyo

Certificate number T06E10369
page 1 of 1

CERTIFICATE OF INSPECTION

Instrument: Gauge Block
Grade: 0 (ASME)
Date of inspection: 18th May. 2006
Unit : μ inch

Nominal Length inch	Ident. No.	Central Deviation	Maximum Deviation	Minimum Deviation	Variation
1	06280	-0.4	+1.2	-0.4	1.6

ENVIRONMENT: Air temperature (68 ± 1.8)F [(20 ± 1.0) ℃]
BASIS OF TEST: ASME B89.1.9-2002
MATERIAL: Steel
INSPECTION METHOD: by comparator
COEFFICIENT OF THERMAL EXPANSION: (6.0±0.3)×10-6/F [(10.8±0.5)×10-6/K]
EXPANDED UNCERTAINTY (For Central Deviation) (k=2): 4" or less 2.4 μ inch; Up to20" (1.2 + L / 2.3) μ inch; (L:Nominal length) L:inch
QUALITY SYSTEM: ISO 9001 Registered Firm : JQA (RQ0189)
TRACEABILITY: Traceable to NIST No.821/268834-03 (NIST=National Institute of Standard and Technology)

Date 18th May. 2006

S.Shirosh

Inspection certificate

Grad K/0/1/2 Gauge Block Sets with JCSS Calibration Certificate (issued by the Mitutoyo JCSS accredited laboratory) see online.

Metric

No.	Blocks per set	Grade	Material	Set configuration
516-339-10	112	1	Ceramic	1,0005 mm (1 block) 1,001-1,009 mm (0,001 mm step / 9 blocks) 1,01-1,49 mm (0,01 mm step / 49 blocks) 0,5-24,5 mm (0,5 mm step / 49 blocks) 25-100 mm (25 mm step / 4 blocks)
516-343-10	103	1	Ceramic	1,005 mm (1 block) 1,01-1,49 mm (0,01 mm step / 49 blocks) 0,5-24,5 mm (0,5 mm step / 49 blocks) 25-100 mm (25 mm step / 4 blocks)
516-371-10	88	1	Ceramic	1,0005 mm (1 block) 1,001-1,009 mm (0,001 mm step / 9 blocks) 1,01-1,49 mm (0,01 mm step / 49 blocks) 0,5-9,5 mm (0,5 mm step / 19 blocks) 10-100 mm (10 mm step / 10 blocks)
516-347-10	87	1	Ceramic	1,001-1,009 mm (0,001 mm step / 9 blocks) 1,01-1,49 mm (0,01 mm step / 49 blocks) 0,5-9,5 mm (0,5 mm step / 19 blocks) 10-100 mm (10 mm step / 10 blocks)
516-351-10	76	1	Ceramic	1,005 mm (1 block) 1,01-1,49 mm (0,01 mm step / 49 blocks) 0,5-9,5 mm (0,5 mm step / 19 blocks) 10-40 mm (10 mm step / 4 blocks) 50-100 mm (25 mm step / 3 blocks)
516-355-10	56	1	Ceramic	0,5 mm (1 block) 1,001-1,009 mm (0,001 mm step / 9 blocks) 1,01-1,09 mm (0,01 mm step / 9 blocks) 1,1-1,9 mm (0,1 mm step / 9 blocks) 1-24 mm (1 mm step / 24 blocks) 25-100 mm (25 mm step / 4 blocks)
516-359-10	47	1	Ceramic	1,005 mm (1 block) 1,01-1,09 mm (0,01 mm step / 9 blocks) 1,1-1,9 mm (0,1 mm step / 9 blocks) 1-24 mm (1 mm step / 24 blocks) 25-100 mm (25 mm step / 4 blocks)
516-363-10	47	1	Ceramic	1,005 mm (1 block) 1,01-1,09 mm (0,01 mm step / 19 blocks) 1,2-1,9 mm (0,1 mm step / 8 blocks) 1-9 mm (1 mm step / 9 blocks) 10-100 mm (10 mm step / 10 blocks)
516-396-10	46	1	Ceramic	1,001-1,009 mm (0,001 mm step / 9 blocks) 1,01-1,09 mm (0,01 mm step / 9 blocks) 1,1-1,9 mm (0,1 mm step / 9 blocks) 1-9 mm (1 mm step / 9 blocks) 10-100 mm (10 mm step / 10 blocks)
516-180-10	34	1	Ceramic	1,0005 mm (1 block) 1,001-1,009 mm (0,001 mm step / 9 blocks) 1,01-1,09 mm (0,01 mm step / 9 blocks) 1,1-1,9 mm (0,1 mm step / 9 blocks) 1-5 mm (1 mm step / 5 blocks) 10 mm (1 block)
516-367-10	32	1	Ceramic	1,005 mm (1 block) 1,01-1,09 mm (0,01 mm step / 9 blocks) 1,1-1,9 mm (0,1 mm step / 9 blocks) 1-9 mm (1 mm step / 9 blocks) 10-30 mm (10 mm step / 3 blocks) 60 mm (1 block)

All products to be sold to commercial customers.
Product illustrations are without obligation. Product descriptions, in particular any and all technical specifications, are only binding when explicitly agreed upon.

Ceramic Gauge Block Sets Grade 2 with Inspection Certificate

Grade 2 with Inspection Certificate

Inspection Certificate

Metric

No.	Blocks per set	Grade	Material	Set configuration
516-340-10	112	2	Ceramic	1,0005 mm (1 block) 1,001-1,009 mm (0,001 mm step / 9 blocks) 1,01-1,49 mm (0,01 mm step / 49 blocks) 0,5-24,5 mm (0,5 mm step / 49 blocks) 25-100 mm (25 mm step / 4 blocks)
516-344-10	103	2	Ceramic	1,005 mm (1 block) 1,01-1,49 mm (0,01 mm step / 49 blocks) 0,5-24,5 mm (0,5 mm step / 49 blocks) 25-100 mm (25 mm step / 4 blocks)
516-372-10	88	2	Ceramic	1,0005 mm (1 block) 1,001-1,009 mm (0,001 mm step / 9 blocks) 1,01-1,49 mm (0,01 mm step / 49 blocks) 0,5-9,5 mm (0,5 mm step / 19 blocks) 10-100 mm (10 mm step / 10 blocks)
516-348-10	87	2	Ceramic	1,001-1,009 mm (0,001 mm step / 9 blocks) 1,01-1,49 mm (0,01 mm step / 49 blocks) 0,5-9,5 mm (0,5 mm step / 19 blocks) 10-100 mm (10 mm step / 10 blocks)
516-352-10	76	2	Ceramic	1,005 mm (1 block) 1,01-1,49 mm (0,01 mm step / 49 blocks) 0,5-9,5 mm (0,5 mm step / 19 blocks) 10-40 mm (10 mm step / 4 blocks) 50-100 mm (25 mm step / 3 blocks)
516-356-10	56	2	Ceramic	0,5 mm (1 block) 1,001-1,009 mm (0,001 mm step / 9 blocks) 1,01-1,09 mm (0,01 mm step / 9 blocks) 1,1-1,9 mm (0,1 mm step / 9 blocks) 1-24 mm (1 mm step / 24 blocks) 25-100 mm (25 mm step / 4 blocks)
516-360-10	47	2	Ceramic	1,005 mm (1 block) 1,01-1,09 mm (0,01 mm step / 9 blocks) 1,1-1,9 mm (0,1 mm step / 9 blocks) 1-24 mm (1 mm step / 24 blocks) 25-100 mm (25 mm step / 4 blocks)
516-364-10	47	2	Ceramic	1,005 mm (1 block) 1,01-1,09 mm (0,01 mm step / 19 blocks) 1,2-1,9 mm (0,1 mm step / 8 blocks) 1-9 mm (1 mm step / 9 blocks) 10-100 mm (10 mm step / 10 blocks)
516-397-10	46	2	Ceramic	1,001-1,009 mm (0,001 mm step / 9 blocks) 1,01-1,09 mm (0,01 mm step / 9 blocks) 1,1-1,9 mm (0,1 mm step / 9 blocks) 1-9 mm (1 mm step / 9 blocks) 10-100 mm (10 mm step / 10 blocks)
516-181-10	34	2	Ceramic	1,0005 mm (1 block) 1,001-1,009 mm (0,001 mm step / 9 blocks) 1,01-1,09 mm (0,01 mm step / 9 blocks) 1,1-1,9 mm (0,1 mm step / 9 blocks) 1-5 mm (1 mm step / 5 blocks) 10 mm (1 block)
516-368-10	32	2	Ceramic	1,005 mm (1 block) 1,01-1,09 mm (0,01 mm step / 9 blocks) 1,1-1,9 mm (0,1 mm step / 9 blocks) 1-9 mm (1 mm step / 9 blocks) 10-30 mm (10 mm step / 3 blocks) 60 mm (1 block)

Specifications

Accuracy	EN ISO 3650

Mitutoyo

Certificate number T06E10369
page 1 of 1

CERTIFICATE OF INSPECTION

Instrument: Gauge Block
Grade: 0 (ASME)
Date of inspection: 18th May. 2006
Unit : μ inch

Nominal Length inch	Ident. No.	Central Deviation	Maximum Deviation	Minimum Deviation	Variation
1	06280	-0.4	+1.2	-0.4	1.6

ENVIRONMENT: Air temperature (68 ± 1.8)°F [(20 ± 1.0) °C]
BASIS OF TEST: ASME B89.1.9-2002
MATERIAL: Steel
INSPECTION METHOD: by comparator
COEFFICIENT OF THERMAL EXPANSION: (6.0±0.3)×10-6/°F [(10.8±0.5)×10-6/K]
EXPANDED UNCERTAINTY (For Central Deviation) (k=2): 4" or less 2.4 μ inch; Up to20" (1.2 + L / 2.3) μ inch; (L:Nominal length) L:inch
QUALITY SYSTEM: ISO 9001 Registered Firm : JQA JM0189
TRACEABILITY: Traceable to NIST No.821/256834-03 (NIST=National Institute of Standard and Technology)

Date 18th May. 2006

S. Shirai

Inspection certificate

Grad K/0/1/2 Gauge Block Sets with JCSS Calibration Certificate (issued by the Mitutoyo JCSS accredited laboratory) see online.

All products to be sold to commercial customers.
Product illustrations are without obligation. Product descriptions, in particular any and all technical specifications, are only binding when explicitly agreed upon.

Ceramic Gauge Blocks - Thin Block Sets with 0,001 mm step and ISO Inspection Certificate

Specifications

Accuracy	EN ISO 3650

Mitutoyo Gauge Blocks and Inspection Certificates

Grad K/0/1/2 Gauge Block Sets with JCSS Calibration Certificate (issued by the Mitutoyo JCSS accredited laboratory) see online.

With ISO Inspection Certificate

Inspection Certificate

Metric

No.	Blocks per set	Grade	Material	Set configuration
516-374-10	18	0	Ceramic	0,991-0,999 mm (0,001 mm step / 9 blocks) 1,001-1,009 mm (0,001 mm step / 9 blocks)
516-375-10	18	1	Ceramic	0,991-0,999 mm (0,001 mm step / 9 blocks) 1,001-1,009 mm (0,001 mm step / 9 blocks)
516-376-10	18	2	Ceramic	0,991-0,999 mm (0,001 mm step / 9 blocks) 1,001-1,009 mm (0,001 mm step / 9 blocks)
516-382-10	9	0	Ceramic	1,001-1,009 mm (0,001 mm step / 9 blocks)
516-383-10	9	1	Ceramic	1,001-1,009 mm (0,001 mm step / 9 blocks)
516-384-10	9	2	Ceramic	1,001-1,009 mm (0,001 mm step / 9 blocks)
516-386-10	9	0	Ceramic	0,991-0,999 mm (0,001 mm step / 9 blocks)
516-387-10	9	1	Ceramic	0,991-0,999 mm (0,001 mm step / 9 blocks)
516-388-10	9	2	Ceramic	0,991-0,999 mm (0,001 mm step / 9 blocks)

Ceramic Gauge Blocks - Long Block Sets with ISO Inspection Certificate

Specifications

Accuracy	EN ISO 3650

Grad K/0/1/2 Gauge Block Sets with JCSS Calibration Certificate (issued by the Mitutoyo JCSS accredited laboratory) see online.

With ISO Inspection Certificate

Inspection Certificate

Metric

No.	Blocks per set	Grade	Material	Set configuration
516-732-10	8	0	Ceramic	125-175 mm (25 mm step / 3 blocks) 200-250 mm (50 mm step / 2 blocks) 300-500 mm (100 mm step / 3 blocks)
516-733-10	8	1	Ceramic	125-175 mm (25 mm step / 3 blocks) 200-250 mm (50 mm step / 2 blocks) 300-500 mm (100 mm step / 3 blocks)
516-734-10	8	2	Ceramic	125-175 mm (25 mm step / 3 blocks) 200-250 mm (50 mm step / 2 blocks) 300-500 mm (100 mm step / 3 blocks)

All products to be sold to commercial customers.
Product illustrations are without obligation. Product descriptions, in particular any and all technical specifications, are only binding when explicitly agreed upon.

Ceramic Wear Block Sets Metric ISO Standard

Wear Block Sets Metric ISO Standard

This set is made up of two gauge blocks and offers you the following benefits:
- Wear-resistant even with frequent use of individual gauge blocks

Inspection Certificate

Ceramic 2-block set

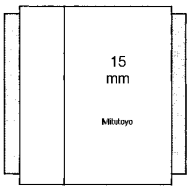

Protection gauge blocks (highlighted in grey above) are placed at each end of the gauge block stack to absorb the wear caused by contact with workpieces.

Metric

No.	Blocks per set	Grade	Material	Set configuration
516-832-10	2	0	Ceramic	1 mm (2 blocks)
516-833-10	2	1	Ceramic	1 mm (2 blocks)
516-830-10	2	0	Ceramic	2 mm (2 blocks)
516-831-10	2	1	Ceramic	2 mm (2 blocks)

Specifications

Accuracy	EN ISO 3650

Mitutoyo Gauge Blocks and Inspection Certificates

Grad K/0/1/2 Gauge Block Sets with JCSS Calibration Certificate (issued by the Mitutoyo JCSS accredited laboratory) see online.

Ceramic Caliper Inspection Sets Metric

Caliper Inspection Sets Metric

Inspection Certificate

516-566-10

Metric

No.	Blocks per set	Grade	Material	Calibration/Standard applications	Set configuration
516-566-10	4	1	Ceramic	EN ISO 13385-1	4 pcs.: 10, 30, 50, 125 mm, Setting ring (ø4 mm, ø10 mm), Pin gage (ø10 mm), Glove
516-567-10	4	2	Ceramic	EN ISO 13385-1	4 pcs.: 10, 30, 50, 125 mm, Setting ring (ø4 mm, ø10 mm), Pin gage (ø10 mm), Glove
516-150-10	3	1	Ceramic	DIN 862 (1988) VDI/VDE/DGQ 2618	3 pcs.: 30, 41,3, 131,4 mm, Setting ring (ø4 mm, ø25 mm), Glove
516-151-10	3	2	Ceramic	DIN 862 (1988) VDI/VDE/DGQ 2618	3 pcs.: 30, 41,3, 131,4 mm, Setting ring (ø4 mm, ø25 mm), Glove

Specifications

Accuracy	Accuracy EN ISO 3650

All products to be sold to commercial customers.
Product illustrations are without obligation. Product descriptions, in particular any and all technical specifications, are only binding when explicitly agreed upon.

Ceramic Micrometer Inspection Sets Metric

Specifications

Accuracy	EN ISO 3650

Micro checker 516-607
applicable gauge block sets
516-156-xx, 516-157-xx, 516-158-xx

Grad K/0/1/2 Gauge Block Sets with JCSS Calibration Certificate (issued by the Mitutoyo JCSS accredited laboratory) see online.

Micrometer Inspection Sets Metric

Inspection Certificate

516-156-10

Metric

With inspection certificate

No.	Blocks per set	Grade	Material	Calibration/Standard applications	Set configuration
516-390-10	10	0	Ceramic	Especially for Micrometer with 2 mm spindle pitch. (Quantu-Mike)	2,2, 4,8, 7,8, 10,4, 12, 15,2, 17,4, 19,6, 22,6, 25 mm
516-391-10	10	1	Ceramic	Especially for Micrometer with 2 mm spindle pitch. (Quantu-Mike)	2,2, 4,8, 7,8, 10,4, 12, 15,2, 17,4, 19,6, 22,6, 25 mm
516-392-10	10	2	Ceramic	Especially for Micrometer with 2 mm spindle pitch. (Quantu-Mike)	2,2, 4,8, 7,8, 10,4, 12, 15,2, 17,4, 19,6, 22,6, 25 mm
516-156-10	10	0	Ceramic	EN ISO 3611 DIN 863 (1999) VDI/VDE/DGQ 2618	2,5, 5,1, 7,7, 10,3, 12,9, 15, 17,6, 20,2, 22,8, 25 mm, Optical parallel (t = 12 mm)
516-157-10	10	1	Ceramic	EN ISO 3611 DIN 863 (1999) VDI/VDE/DGQ 2618	2,5, 5,1, 7,7, 10,3, 12,9, 15, 17,6, 20,2, 22,8, 25 mm, Optical parallel (t = 12 mm)
516-158-10	10	2	Ceramic	EN ISO 3611 DIN 863 (1999) VDI/VDE/DGQ 2618	2,5, 5,1, 7,7, 10,3, 12,9, 15, 17,6, 20,2, 22,8, 25 mm, Optical parallel (t = 12 mm)
516-185-10	10	0	Ceramic	EN ISO 3611 DIN 863 (1999) VDI/VDE/ DGQ 2618	2,5, 5,1, 7,7, 10,3, 12,9, 15, 17,6, 20,2, 22,8, 25 mm, Micro Checker, Optical parallel (t = 12 mm)
516-186-10	10	1	Ceramic	EN ISO 3611 DIN 863 (1999) VDI/VDE/ DGQ 2618	2,5, 5,1, 7,7, 10,3, 12,9, 15, 17,6, 20,2, 22,8, 25 mm, Micro Checker, Optical parallel (t = 12 mm)
516-187-10	10	2	Ceramic	EN ISO 3611 DIN 863 (1999) VDI/VDE/ DGQ 2618	2,5, 5,1, 7,7, 10,3, 12,9, 15, 17,6, 20,2, 22,8, 25 mm, Micro Checker, Optical parallel (t = 12 mm)

All products to be sold to commercial customers.
Product illustrations are without obligation. Product descriptions, in particular any and all technical specifications, are only binding when explicitly agreed upon.

Ceramic Metric Individual Gauge Blocks

Metric Blocks

Ordering example: To order a 0,5mm ISO Standard grade 1 block with JCSS calibration certificate, choose 613506-036.

Calibration Certificate

Inspection Certificate

Length [mm]	No.
0,5	613506
0,991	613551
0,992	613552
0,993	613553
0,994	613554
0,995	613555
0,996	613556
0,997	613557
0,998	613558
0,999	613559
1	613611
1,0005	613520
1,001	613521
1,002	613522
1,003	613523
1,004	613524
1,005	613525
1,006	613526
1,007	613527
1,008	613528
1,009	613529
1,01	613561
1,02	613562
1,03	613563
1,04	613564
1,05	613565
1,06	613566
1,07	613567
1,08	613568
1,09	613569
1,1	613570
1,11	613571
1,12	613572
1,13	613573
1,14	613574
1,15	613575
1,16	613576
1,17	613577
1,18	613578
1,19	613579
1,2	613580
1,21	613581
1,22	613582
1,23	613583
1,24	613584
1,25	613585
1,26	613586
1,27	613587
1,28	613588
1,29	613589

Length [mm]	No.
1,3	613590
1,31	613591
1,32	613592
1,33	613593
1,34	613594
1,35	613595
1,36	613596
1,37	613597
1,38	613598
1,39	613599
1,4	613600
1,41	613601
1,42	613602
1,43	613603
1,44	613604
1,45	613605
1,46	613606
1,47	613607
1,48	613608
1,49	613609
1,5	613641
1,6	613516
1,7	613517
1,8	613518
1,9	613519
2	613612
2,5	613642
3	613613
3,5	613643
4	613614
4,5	613644
5	613615
5,1	613850
5,5	613645
6	613616
6,5	613646
7	613617
7,5	613647
7,7	613851
8	613618
8,5	613648
9	613619
9,5	613649
10	613671
10,3	613852
10,5	613650
11	613621
11,5	613651
12	613622
12,5	613652

Length [mm]	No.
12,9	613853
13	613623
13,5	613653
14	613624
14,5	613654
15	613625
15,5	613655
16	613626
16,5	613656
17	613627
17,5	613657
17,6	613854
18	613628
18,5	613658
19	613629
19,5	613659
20	613672
20,2	613855
20,5	613660
21	613631
21,5	613661
22	613632
22,5	613662
22,8	613856
23	613633
23,5	613663
24	613634
25	613635
25,25	613754
30	613673
35	613755
40	613674
41,3	613857
45	613756
50	613675
60	613676
70	613677
75	613801
80	613678
90	613679
100	613681
125	613802
131,4	613858
150	613803
175	613804
200	613682
250	613805
300	613683
400	613684
500	613685

Specifications

Accuracy	EN ISO 3650
Delivered	Foamed material 0.5-100 mm in a wooden case 125-500 mm

Suffix No. (-XXX)
for Selecting Certificate Provided

ISO/DIN/JIS

Suffix No.	Grade	Inspection Certificate	Calibration Certificate JCSS
-016	K	O	O
-021	0	O	—
-026	0	O	O
-031	1	O	—
-036	1	O	O
-041	2	O	—
-046	2	O	O

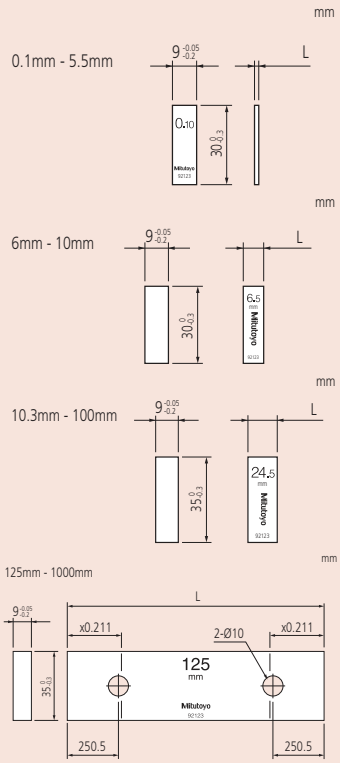

All products to be sold to commercial customers.
Product illustrations are without obligation. Product descriptions, in particular any and all technical specifications, are only binding when explicitly agreed upon.

Gauge Blocks with a Calibrated CTE

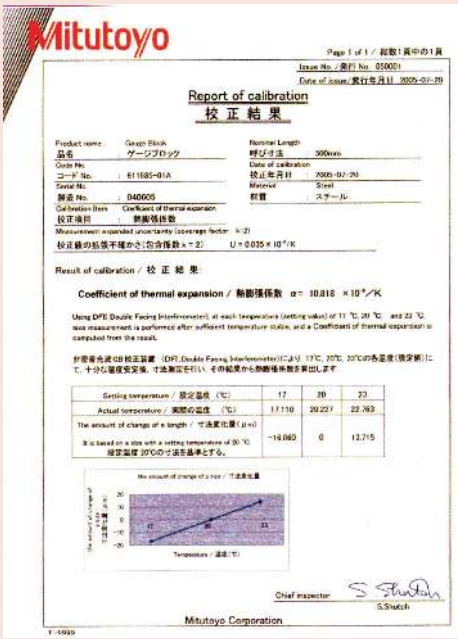
Mitutoyo

Report of calibration
校正結果

Result of calibration / 校正結果:

Coefficient of thermal expansion / 熱膨張係数

Chief inspector

Mitutoyo Corporation

To each final dimension a factory certificate is supplied.
Uncertainty of thermal expansion coefficient : 0,035 x 10^{-6}/K (k=2)
Uncertainty of length measurement : 30 nm (k=2), for 100 mm blocks.

Gauge Blocks with a Calibrated Coefficient of Thermal Expansion

Calibration Certificate

These are metric gauge blocks with a calibrated coefficient of thermal expansion. They offer you the following benefits:

- Mitutoyo offers top-level gauge blocks (steel and ceramic) which are superior to K class blocks, with their quality supported by Mitutoyo's best technologies.
- They feature an accurately calibrated thermal expansion coefficient measured with a proprietary double-faced interferometer (DFI).
- Each gauge block is calibrated for length on a highly accurate gauge block interferometer (GBI) system.
- Uncertainty of thermal expansion coefficient: 0,035 x 10-6 /K (k=2).
- Uncertainty of length measurement: 30 nm (k=2), for 100mm blocks.

Metric

Steel

No.	Length [mm]	Accuracy	Grade	Material
611681-01B	100	EN ISO 3650, Grade K	K	Steel
611802-01B	125	EN ISO 3650, Grade K	K	Steel
611803-01B	150	EN ISO 3650, Grade K	K	Steel
611804-01B	175	EN ISO 3650, Grade K	K	Steel
611682-01B	200	EN ISO 3650, Grade K	K	Steel
611805-01B	250	EN ISO 3650, Grade K	K	Steel
611683-01B	300	EN ISO 3650, Grade K	K	Steel
611684-01B	400	EN ISO 3650, Grade K	K	Steel
611685-01B	500	EN ISO 3650, Grade K	K	Steel

Ceramic

No.	Length [mm]	Accuracy	Grade	Material
613681-01B	100	EN ISO 3650, Grade K	K	Ceramic
613802-01B	125	EN ISO 3650, Grade K	K	Ceramic
613803-01B	150	EN ISO 3650, Grade K	K	Ceramic
613804-01B	175	EN ISO 3650, Grade K	K	Ceramic
613682-01B	200	EN ISO 3650, Grade K	K	Ceramic
613805-01B	250	EN ISO 3650, Grade K	K	Ceramic
613683-01B	300	EN ISO 3650, Grade K	K	Ceramic
613684-01B	400	EN ISO 3650, Grade K	K	Ceramic
613685-01B	500	EN ISO 3650, Grade K	K	Ceramic

All products to be sold to commercial customers.
Product illustrations are without obligation. Product descriptions, in particular any and all technical specifications, are only binding when explicitly agreed upon.

ZERO CERA Blocks

Ultra-low Expansion Ceramic Gauge Blocks

These are ultra-low expansion ceramic gauge blocks.
The ZERO CERA Blocks offer you the following benefits:

- Thermal expansion at 20 ±1°C is less than 1/500 that of steel.
- There is almost no secular change either in the dimension or coefficient of thermal expansion.
- You will find them light and easy to handle.
- They are rust free.
- They are magnetisation free.

Calibration Certificate

Specifications

Grade*1	K
Accuracy	EN ISO 3650
Coefficient of thermal expansion	0 ± 0.02 x 10^{-6}/K (at 20°C)*2
Density	2.5 g/cm³*2
Standard accessories	Inspection certificate, Calibration certificate and custom-made aluminium case

*1
If you require a grade other than K, please contact Mitutoyo.
*2
Value claimed by the material supplier.

Metric

No.	Accuracy	Remarks	Length	Type
617675-016	EN ISO 3650, Grade K		50 mm	Individual
617673-016	EN ISO 3650, Grade K		30 mm	Individual
617845-016	EN ISO 3650, Grade K		1000 mm	Individual
617844-016	EN ISO 3650, Grade K		900 mm	Individual
617685-016	EN ISO 3650, Grade K		500 mm	Individual
617843-016	EN ISO 3650, Grade K		800 mm	Individual
617684-016	EN ISO 3650, Grade K		400 mm	Individual
617683-016	EN ISO 3650, Grade K		300 mm	Individual
617841-016	EN ISO 3650, Grade K		700 mm	Individual
617682-016	EN ISO 3650, Grade K		200 mm	Individual
617681-016	EN ISO 3650, Grade K		100 mm	Individual
617840-016	EN ISO 3650, Grade K		600 mm	Individual
516-771-60	EN ISO 3650, Grade K	Zero Cera Block set. 12 blocks per set, 30 mm (1 block) 50 mm (1 block) 100 - 1000 mm (100 mm step / 10 blocks)		Set

Characteristics comparison of gauge block materials

	ZERO CERA BLOCK	Low expansion glass	CERA BLOCK	Steel	Tungsten carbide
Coefficient of thermal expansion (10^{-6}/K)	0 ± 0,02 *2) *3)	0 ± 0,02 *2) *3)	9,3 ± 0,5	10,8 ± 0,5	5,5 ± 1
Thermal conductivity (W/m*K)	3,7	1,7	2,9	54,4	79,5
Specify gravity	2,5	2,55	6	7,8	14,8
Young modulus (GPa)	130	90	206	206	618
Poisson ratio	0,3	0,25	0,3	0,3	0,2
Flexural strength (3 points) (MPa)	210	143	1270	1960	1960
Fracture toughness (MPa*$m^{1/2}$)	1,2	0,69 *4)	7	120	12
Vickers hardness (HV)	826 *3)	680	1350	800	1650

1) Material for Mitutoyo Products
2) Value at 20°C
3) Claimed value by the material supplier
4) Value measured by the material supplier (reference)

All products to be sold to commercial customers.
Product illustrations are without obligation. Product descriptions, in particular any and all technical specifications, are only binding when explicitly agreed upon.

Gauge Block Accessories

Series 516

Specially designed for long gauge blocks over 100 mm which have two coupling holes on the body.

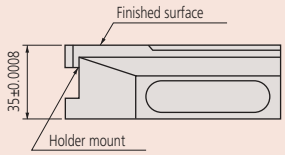

Holder base : 619009

516-605

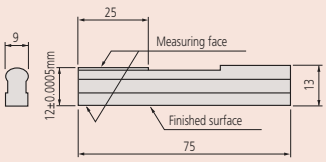

Half-round jaw : 619013

No.	Included in set
516-605	Holder A (**619031**)-1 pc Holder B (**619032**)-1 pc Holder C (**619033**)-1 pc Holder D (**619034**)-1 pc Holder E (**619035**)-1 pc Adapter (**619036**)-3 pcs Holder base 35mm (**619009**)-1 pc Half-round jaw 12mm (**619013**)-2 pcs Plain jaw (**619018**)-2 pcs Scriber point (**619019**)-1 pc

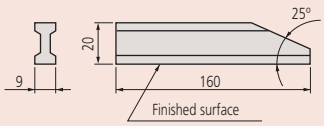

Plain jaw : 619018

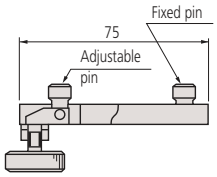

Holder A : 619031
Used for coupling two long gauge blocks.

619031

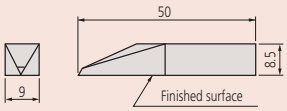

Scriber point : 619019

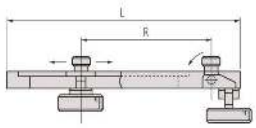

619032 / 619033

Holder B and C :
Used for coupling two long gauge blocks together with other gauge blocks up to 35 mm (Holder B) or 140 mm Holder C). Also used for attaching jaws with two adapters.
Holder B : 619032 (R max.= 90 mm- L= 126 mm)
Holder C : 619033 (R max.= 200 mm- L= 236 mm)

Holder D : 619034
Used for attaching to the holder base.

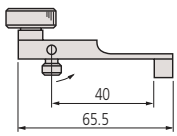

619034

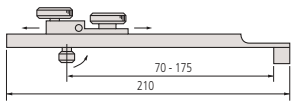

Holder E : 619035
Used for attaching to the holder base together with other gauge blocks up to 125 mm. Used for attaching jaws with one adapter.

All products to be sold to commercial customers.
Product illustrations are without obligation. Product descriptions, in particular any and all technical specifications, are only binding when explicitly agreed upon.

Mitutoyo

Gauge Block Accessories

Series 619

These accessories are specially designed for long gauge blocks over 100mm which have two coupling holes on the body.

516-601J

516-602J

1. Set

No.	Included in set
516-602J	(1 x 619002; 1 x 619003; 1 x 619004; 1 x 619005; 1 x 619009; 2 x 619010; 2 x 619011; 2 x 619012; 1 x 619019; 1 x 619020; 1 x 619022)
516-601J	(1 x 619003; 1 x 619004; 1 x 619005; 1 x 619009; 2 x 619010; 2 x 619011; 2 x 619012; 2 x 619013; 2 x 619014; 2 x 619018; 1 x 619019; 1 x 619020; 2 x 619021; 1 x 619022; 1 x 619023)

2. Holder

No.	L [mm]
619005	20-250
619004	15-160
619003	5-100
619002	15-60

3. Holder base

No.	Description
619009	35 mm

4. Half-round jaw

No.	A [mm]	B [mm]	C [mm]	H [mm]
619010	5,5	40	7,5	2 ±0,0005
619011	14	45	7,5	5 ±0,0005
619012	18,5	50	8,5	8 ±0,0005
619013	25	75	13	12 ±0,0005
619014	25	125	20,5	20 ±0,0005

5. Miscellaneous jaws

No.	Description
619018	Plain jaw
619019	Scriber point
619020	Centre point
619021	Tram point

6. Triangular straight edge

No.	A [mm]
619022	16
619023	19,5

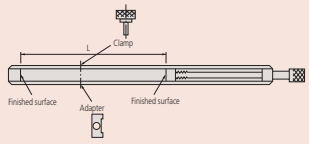

Holder : 619002 to 619005
Used to clamp plain jaws, a scriber point, etc., to a gauge block stack.

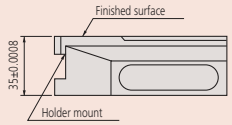

Holder base 35 mm : 619009
Acts as base for a stack of gauge blocks that carry one of the many types of point.

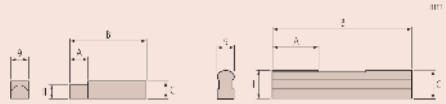

Half round jaw : 619010 to 619014
Used for gauging an outside or inside diameter if used when a pair of jaws in a holder.

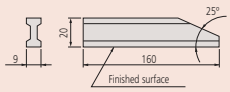

Plain jaw : 619018

Gauges outside and inside dimensions (not inside diameters) when used as a pair of jaws in a holder.

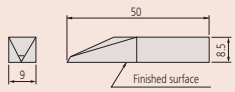

Scriber point : 619019
Scribes a straight line on a workpiece a known distance from a datum plane if used in a holder and holder base.

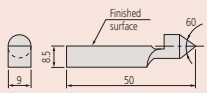

Centre point : 619020
Pushed into a small hole, or conical punch mark, this point provides the pivot for scribing a circular line with a gauge block trammel assembly.

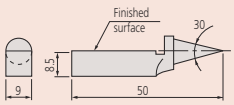

Tram point : 619021
For checking distances between lines and points.

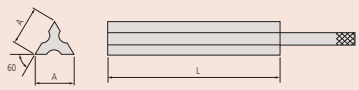

Triangular straight edge : 619022/619023
Can be used to indicate parallelism.

All products to be sold to commercial customers.
Product illustrations are without obligation. Product descriptions, in particular any and all technical specifications, are only binding when explicitly agreed upon.

Ceraston

Removing burrs

1 Wipe any dust and oil films from the gauge block and the Ceraston (or Arkansas stone) using a solvent.
2 Place the gauge block on the Ceraston so that the measuring face that has burrs is on the abrasive surface of the stone. While applying light pressure, move the gauge block to and fro about ten times (Fig. 1). Use a block rubber for thin gauge blocks to apply even pressure (Fig. 2).
3 Check the measuring face for burrs with an optical flat. If the burrs have not been removed, repeat step 2. If burrs are too large, they may not be removed with an abrasive stone. If so, discard the gauge block.

Accessory for Gauge Block Maintenance

This accessory for gauge block maintenance offers you the following benefits:
- Alumina-ceramic abrasive stone lets you remove burrs from hard materials such as ceramics, that ordinary stones cannot handle.
- You can use them for both steel gauge blocks and CERA Blocks.

601644

601645

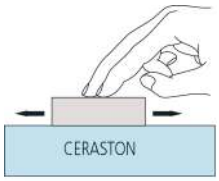

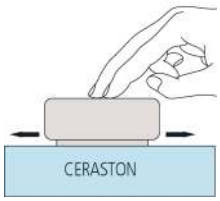

No.	Dimensions (WxDxH)	Mass [g]
601644	150 x 50 x 20 mm	530
601645	100 x 25 x 12 mm	110

Consumable spares

No.	Description
601645	Cerastone for Gauge Blocks, 100x25x12mm
600004	Tweezer for Gauge Blocks
600005	Blower Brush for Gauge Blocks
600006	Cleaning Paper for Gauge Blocks
600007	Artificial Leather Mat for Gauge Blocks
600008	Reagent Bottle, 100 ml
600009D	Cotton Gloves, White
158-117	Optical Flat, 12mm, D=45mm, 0,2µm

Maintenance Kit for Gauge Blocks

Series 516

This is a maintenance kit for gauge blocks that offers you the following benefits:
- It includes all maintenance tools needed for the daily care and storage of gauge blocks.
- It is supplied in a fitted wooden case for portable use.

No.	Tools and accessories included
516-650E	Ceraston (**601645**): Used for removing burrs on the measuring surface. Tweezers (**600004**): Used for handling thin gauge blocks. Blower brush (**600005**): Used for blowing dust off the measuring surface. Cleaning paper (**600006**): Used for wiping off rust preventive oil and contamination. Artificial leather mat (**600007**): Used as a gauge block mat. Reagent bottle (**600008**): Bottle for wiping solution (100 ml). Solution not included. Gloves (**600009D**) Optical flat **(158-117)**

All products to be sold to commercial customers.
Product illustrations are without obligation. Product descriptions, in particular any and all technical specifications, are only binding when explicitly agreed upon.

Linear Gauge Application Examples
Page 361

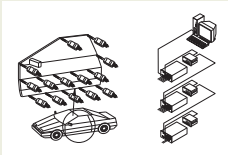

SENSORPAK
Page 362

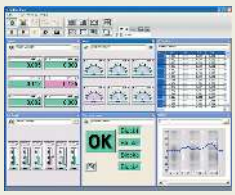

Digimatic and Incremental Linear Gauge
Page 363

Counters and Display Units
Page 371

Mu-Checker
Page 378

Motorized Low Force High Precision Gauges LITEMATIC
Page 381

All products to be sold to commercial customers.
Product illustrations are without obligation. Product descriptions, in particular any and all technical specifications, are only binding when explicitly agreed upon.

Linear Gauge Application Examples

Linear Gage Applications

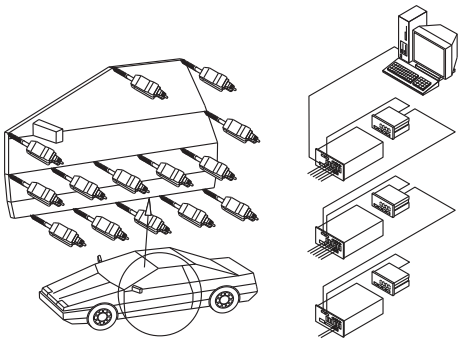

Multi-point measurement on car doors

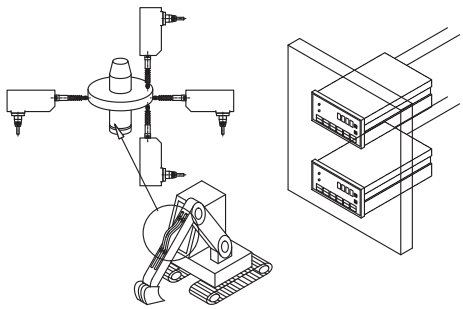

Dimensional measurement of fluid flywheels

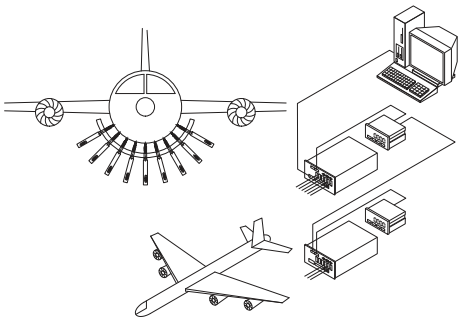

Measurement of aeroplane body deformation

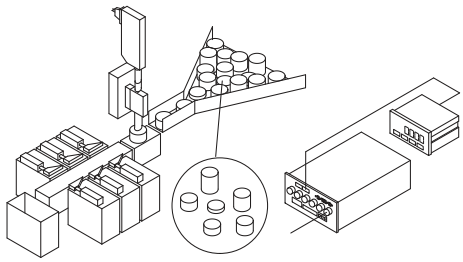

Sorting of parts according to size

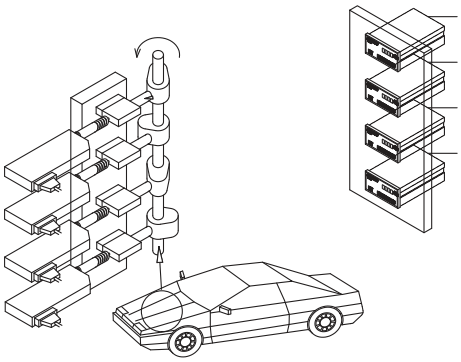

Cam measurement

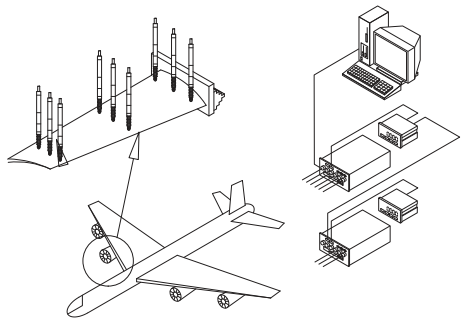

Multi-point measurement on turbine blades

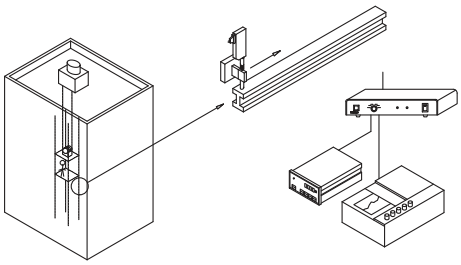

Measurement of deflection of lift guiding rails

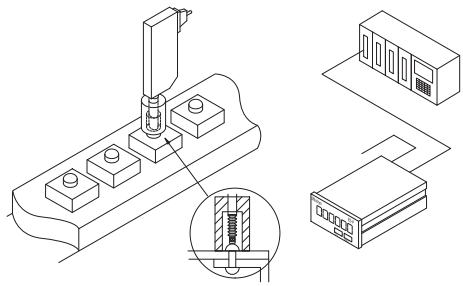

Rivet head testing

All products to be sold to commercial customers.
Product illustrations are without obligation. Product descriptions, in particular any and all technical specifications, are only binding when explicitly agreed upon.

Mitutoyo

SENSORPAK

The SENSORPAK supports the development of measuring facilities and measuring stations. It offers you the following benefits:

- It can simultaneously display measurement values from up to 60 sensors in real time.
- You can make calculations using measurement values from up to 30 sensors in real time.
- It enables a huge range of different graphical presentations of using measurement, such as number representation, pointer representation, scale representation.
- Data registration can be made in control cards or data tables.
- You can also carry out further data processing with external software, such as Microsoft® Excel® or MeasurLink.

Measurement screen

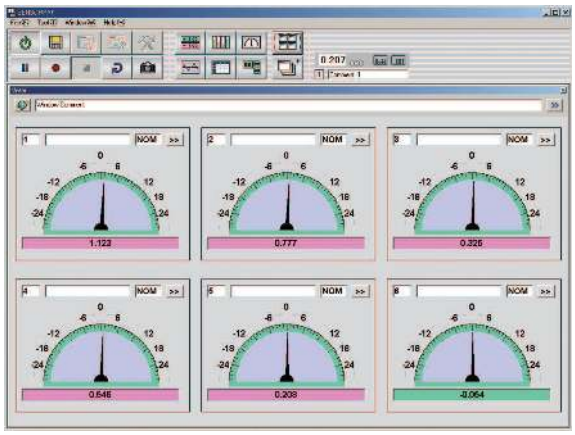

Meter screen

Model	SENSORPAK
No.	**02NGB072**
Output function	Direct output to Microsoft® Excel® spreadsheet, CSV file output (compatible with Measur-Link)
Total tolerance judgement	GO/NG judgement (by specifying gauges to be used for total tolerance judgement) GO/NG signal output with optional I/O cable
Input function	-
Applicable counter	Counters with RS-232C interface (EH and EV), with USB interface (EH)
Display	Display type : Counter, bar graph, meter, chart (capable of simultaneous display) Tolerance judgement result : Color display (green/red) Connectable gauges : Max. 60 gages

Specifications

OS compatibility	Windows® 7 (32/64 bit) Windows® 8. 1 (32/64 bit) Excel® 2007, 2010, 2013

Optional accessories

No.	Description
12AAA807D	Cable RS-232C 2m Null Modem Type, Crossed Type

All products to be sold to commercial customers.
Product illustrations are without obligation. Product descriptions, in particular any and all technical specifications, are only binding when explicitly agreed upon.

ABSOLUTE Digimatic Linear Gauge LGS Series

The LGS is a compact ABS linear gauge that offers you the following benefits:

- Its ABSOLUTE Digimatic data output and IP-66 protection class give you best-of-breed technology.

575-303

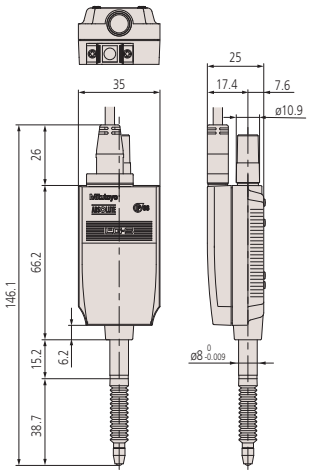

Metric

No.	Range [mm]	Accuracy	Measuring force	Stem Ø	Direction of counting	Mass [g]
575-303	0 - 12.7	15 µm	2 N with spindle down, 1,8 N spindle horizontal, 1,6 N spindle upwards	8 mm	positive	190

*[1] Spindle DOWN/Horizontal/UP

Specifications

Scale	Electrostatic capacitance-type ABSOLUTE linear encoder
Max. response speed	Unlimited (measuring by scanning cannot be performed)
Contact point	Ø3 mm carbide ball thread : M 2,5 x 0,45 mm
Cable length	2 m
Output signal	Digimatic
Environmental conditions	0 °C to 40 °C (20 % to 80 % rel. humidity, no condensation)
Bearing type	Slide bearing
Digital step	0,01 mm

Optional accessories

No.	Description
02ADF640	Extension Adaptor, for SPC Cables.
936937	Digimatic Cable, Flat 10-Pin Type, 1m
965014	Digimatic Cable, Flat 10-Pin Type, 2m
903594	Air Driving Device, for Indicator
542-007D	Display Unit EC-Counter, CEE, for Digimatic Gauges
542-016	Linear Gauge Counter EG, for Linear Gauge LGS, LGD, Scale Units
542-093-2	Linear Gauge Counter EB, for LGS, LGD, Scale Units
542-072D	Linear Gauge Counter EH, for LGS, LGD, Scale Units
542-064	Linear Gauge Counter EV-D, for LGS, LGD, Scale Units
63AAA033	Digimatic Interface DMX-8/2, 8x Digimatic Input, Serial D-SUB 9 Connector
63AAA026	Digimatic Interface DMX-16, 16x Digimatic Input, Serial D-SUB 9 Connector
63AAA106	Digimatic Interface DMX-16C, 16x Digimatic Input, Serial D-SUB 9 Connector

Consumable spares

No.	Description
238774	Silicon rubber boot for ID-C, ID-N, ID-S

Air Drive Unit

- Provides smooth lifting and lowering of the contact point of a gauge by pneumatic cylinder.
- The speed of lift can be regulated by the throttle on the remote cylinder.

No.	Range [mm]	Remarks	Suitable for gage model	Air supply [MPa]	Mass [g]
903594	10	Need air filter, regulator and lubricator	LGS	0,5	60

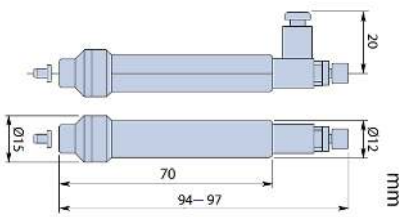

903594

Specifications

Throttle	Interior Ø 2,5 mm Exterior Ø 3,2 mm

Refer to the Linear Gauge documentation for more details

All products to be sold to commercial customers.
Product illustrations are without obligation. Product descriptions, in particular any and all technical specifications, are only binding when explicitly agreed upon.

ABSOLUTE Digimatic Linear Gauge LGD Series

- Suitable for installation in machines, measuring devices and multi-position measurements.
- You can output data in Digimatic format, so you can document and determine measurement values via connected Digimatic data processing units and interface.

575-326

Metric

No.	Range [mm]	Accuracy	Measuring force	Stem Ø	Cable length [m]	Mass [g]
575-326	0 - 10	20 µm	1,2 N with spindle down, 1,1 N spindle horizontal, 1 N spindle upwards	8 mm	2	260
575-327	0 - 25	20 µm	4,6 N with spindle down, 4,3 N spindle horizontal, 4 N spindle upwards	15 mm	2	300
575-328	0 - 50	30 µm	5,7 N with spindle down, 5,3 N spindle horizontal, 4,9 N spindle upwards	15 mm	2	400
575-328-5	0 - 50	30 µm	5,7 N with spindle down, 5,3 N spindle horizontal, 4,9 N spindle upwards	15 mm	5	500

*1 Spindle DOWN/Horizontal/UP

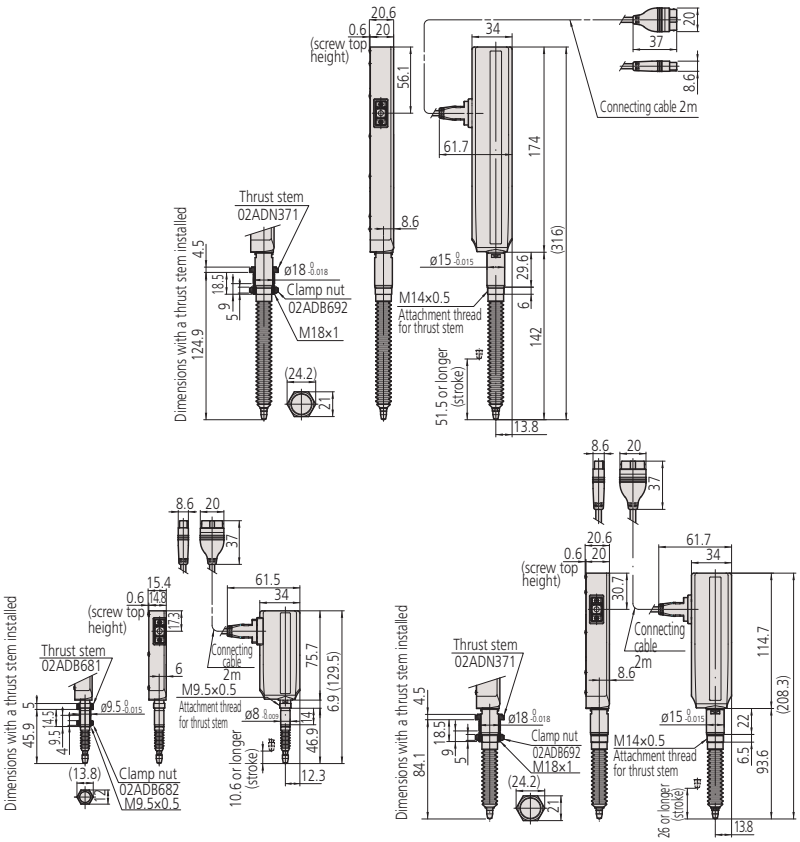

Specifications

Scale	Electrostatic capacitance-type ABSOLUTE linear encoder
Max. response speed	Unlimited (measurement by scanning cannot be performed)
Contact point	Ø3 mm carbide ball, thread: M 2,5 x 0,45
Output signal	Digimatic
Environmental conditions	0 °C to 40 °C (20 % to 80 % rel. humidity, no condensation)
External input	Origin-setting signal
Bearing type	Linear ball bearing
Digital step	0,01 mm

Standard accessories

No.	Description
538610	Wrench Key/542
04GAA857	Spanner/368

Optional accessories

No.	Description
02ADE230	Air Drive Unit for Linear Gauges, 10 mm
02ADE250	Air Drive Unit for Linear Gauges, 25 mm
02ADE270	Air Drive Unit for Linear Gauges, 50 mm
936937	Digimatic Cable, Flat 10-Pin Type, 1m
02ADF640	Extension Adaptor, for SPC Cables.
02ADB680	Thrust Stem Set (for 10 mm model)
02ADN370	Thrust Stem Set (for 25 mm and 50 mm range model)
542-007D	Display Unit EC-Counter, CEE, for Digimatic Gauges
542-016	Linear Gauge Counter EG, for Linear Gauge LGS, LGD, Scale Units
542-093-2	Linear Gauge Counter EB, for LGS, LGD, Scale Units
542-072D	Linear Gauge Counter EH, for LGS, LGD, Scale Units
542-064	Linear Gauge Counter EV-D, for LGS, LGD, Scale Units
63AAA033	Digimatic Interface DMX-8/2, 8x Digimatic Input, Serial D-SUB 9 Connector
965014	Digimatic Cable, Flat 10-Pin Type, 2m
63AAA026	Digimatic Interface DMX-16, 16x Digimatic Input, Serial D-SUB 9 Connector
63AAA106	Digimatic Interface DMX-16C, 16x Digimatic Input, Serial D-SUB 9 Connector

Consumable spares

No.	Description
901312	Contact Element Ball Point, M2,5x0,45, 7,3mm Length, Carbide, Metric
238772	Silicone Rubber Boot (for 10 mm model)
962504	Silicone Rubber Boot (for 25 mm model)
962505	Silicone Rubber Boot (for 50 mm model)

02ADF640

Refer to the Linear Gauge documentation for more details

All products to be sold to commercial customers.
Product illustrations are without obligation. Product descriptions, in particular any and all technical specifications, are only binding when explicitly agreed upon.

Linear Gauge LG100 Series

Linear Gauge LG100 Series

The LG100 is a very robust and economical linear gauge for in-line use and automatic machines, in combination with the EJ Counter. EH-counters can be used as well.

- The advanced construction of the plunger guidance assembly makes it very resistant to external shocks and vibrations
- Its differential square-wave signal output allows for a wide range of applications
- Long-lasting due to linear ball-bearings in the spindle unit
- Repeatability of 0,3 µm
- Narrow range accuracy: 0,5 µm (20 µm range)
- Operation temperature range: 0 - 50°C

Specifications

Scale	Photoelectric linear encoder
Contact point	Ø3 mm carbide ball, thread: M 2,5 x 0,45
Cable length	2 m
Power supply	DC 5 V ±0,2 V ripple voltage 200 mVpp max
Output signal	90° phase difference, differential square wave (RS-422 equivalent)
Environmental conditions	0°C to 50°C (20% to 80% rel. humidity, no condensation)
Bearing type	Linear ball bearing
Minimum edge distance	500 ns (1 µm type), 250 ns (0,5/0,1 µm type)
Scale reference point	3 mm from the lowest rest point (10 mm type), 5mm from the lowest rest point (25/50 mm type)

Optional accessories

No.	Description
21HAA331	HNBR RUBBER CAP, 10 mm model
21HZA176	HNBR RUBBER CAP, 25 mm model
21HZA184	HNBR RUBBER CAP, 50 mm model
21HZA197	Extension Cable 5 m (10P-10P)
21HZA198	Extension Cable 10 m (10P-10P)
21HZA199	Extension Cable 20 m (10P-10P)
21HZA195	Exchange Plug (for P-Counter)
21HZA196	Exchange Plug (for Z-Counter)
02ADE230	Air Drive Unit for Linear Gauges, 10 mm
02ADE250	Air Drive Unit for Linear Gauges, 25 mm
02ADE270	Air Drive Unit for Linear Gauges, 50 mm
02ADB680	Thrust Stem Set (for 10 mm model)
02ADB681	Thrust Stem (part)
02ADB682	Nut (part)
02ADB683	Spanner Wrench (for 02ADB682)
02ADN370	Thrust Stem Set (for 25 mm and 50 mm range model)
02ADN371	THRUST STEM, for 25 mm and 50 mm model
02ADB692	Nut (part)
02ADB693	Spanner Wrench (for 02ADB692)
238772	Silicone Rubber Boot (for 10 mm model)
962504	Silicone Rubber Boot (for 25 mm model)
962505	Silicone Rubber Boot (for 50 mm model)
542-071D	Linear Gauge Counter EH, (need 21HZA195)
542-075D	Linear Gauge Counter EH, (need 21HZA195)
542-073D	Linear Gauge Counter EH, (need 21HZA196)
542-080	EJ-Counter -102N
542-081	EJ Counter-102NE

Consumable spares

No.	Description
901312	Contact Element Ball Point, M2,5x0,45, 7,3mm Length, Carbide, Metric

No.	Range [mm]	Accuracy	Measuring force	Resolution	Stem Ø	Max. response speed	Signal pitch [µm]	Mass [g]
542-190	0 - 10	(1,5+L/50) µm L=measured length in mm	1,4 N with spindle down, 1,3 N with spindle horizontal, 1,2 N with spindle upwards	0,0001	8 mm	1500 mm/s	4	260
542-191	0 - 10	(1,5+L/50) µm L=measured length in mm	1,4 N with spindle down, 1,3 N with spindle horizontal, 1,2 N with spindle upwards	0,0005	8 mm	1500 mm/s	2	260
542-192	0 - 10	(0,8+L/50) µm L=measured length in mm	1,4 N with spindle down, 1,3 N with spindle horizontal, 1,2 N with spindle upwards	0,0001	8 mm	400 mm/s	0,4	260
542-193	0 - 25	(1,5+L/50) µm L=measured length in mm	4,6 N with spindle down, 4,3 N with spindle horizontal, 4 N with spindle upwards	0,001	15 mm	1500 mm/s	4	300
542-194	0 - 25	(1,5+L/50) µm L=measured length in mm	4,6 N with spindle down, 4,3 N with spindle horizontal, 4 N with spindle upwards	0,0005	15 mm	1500 mm/s	2	300
542-195	0 - 25	(0,8+L/50) µm L=measured length in mm	4,6 N with spindle down, 4,3 N with spindle horizontal, 4 N with spindle upwards	0,0001	15 mm	400 mm/s	0,4	300
542-196	0 - 50	(1,5+L/50) µm L=measured length in mm	5,7 N with spindle down, 5,3 N with spindle horizontal, 4,9 N with spindle upwards	0,001	15 mm	1500 mm/s	4	400
542-197	0 - 50	(1,5+L/50) µm L=measured length in mm	5,7 N with spindle down, 5,3 N with spindle horizontal, 4,9 N with spindle upwards	0,0005	15 mm	1500 mm/s	2	400

if no EJ-Counter is used, an adapter is necessary (for all LG100 models)

All products to be sold to commercial customers.
Product illustrations are without obligation. Product descriptions, in particular any and all technical specifications, are only binding when explicitly agreed upon.

Slim Head Linear Gauge LGK Series

This is a slim type linear gauge that allows you to meet a variety of measurement needs.
The Linear Gage SLIM HEAD LGK offers you the following benefits:

- Differential square-wave signal output enables to use it for a wide range of applications.
- You can install it even where space is restricted, thanks to its small size.
- Its photoelectric scale gives it high precision across the entire measuring range.
- It is very long lasting due to linear ball-bearings in the spindle unit.

542-157

No.	Range [mm]	Accuracy	Measuring force	Resolution	Signal pitch [µm]	Max. response speed	Mass [g]
542-157	0 - 10	(1,5 + L/50) µm L=measured length in mm	0,8 N with spindle down, 0,75 N spindle horizontal, 0,7 N spindle upwards	0,0005	2	1500	175

*1 Spindle DOWN/Horizontal/UP

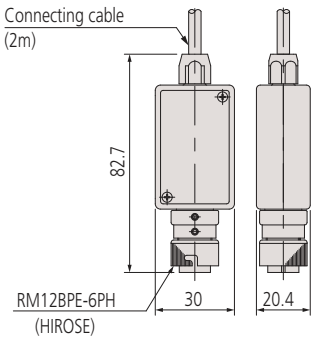

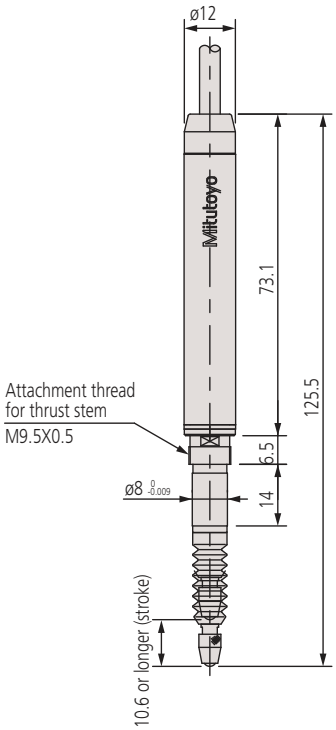

Specifications

Scale	Photoelectric linear encoder
Stem Ø	8 mm
Contact point	Ø 3 mm carbide ball, thread: M 2,5 x 0,45
Cable length	2 m
Power supply	5 V (4,5 V to 5,2 V), 80 mA max.
Output signal	90° phase difference, differential square wave (RS-422A equivalent) minimum edge distance 200 ns (0,1 µm type), 200 ns (0,5 µm type), 400 ns (1 µm type)
Environmental conditions	0° C to 40° C (20% to 80% rel. humidity, no condensation)
Bearing type	Linear ball bearing

Standard accessories

No.	Description
538610	Wrench Key/542

Optional accessories

No.	Description
902434	Extension Cable 5 m, for Linear Gauge
902433	Extension Cable 10m
902432	Extension Cable 20m
02ADE230	Air Drive Unit for Linear Gauges, 10 mm
542-015	Linear Gauge Counter EG, for Linear Gauge LGF, LGK, LGB,LGM, LGH
02ADB680	Thrust Stem Set (for 10 mm model)
542-092-2	Linear Gauge Counter EB, for LGF, LGK, LGB, LG, LGM, LGH
542-075D	Linear Gauge Counter EH, (need 21HZA195)
542-071D	Linear Gauge Counter EH, (need 21HZA195)
542-063	Linear Gauge Counter EV, for LGF, LGK, LGB, LG, LGM, LGH
542-080	EJ-Counter -102N
542-081	EJ Counter-102NE
21HZA193	Connector Adapter Cable (for P-Gage)

Consumable spares

No.	Description
238772	Silicone Rubber Boot (for 10 mm model)
901312	Contact Element Ball Point, M2,5x0,45, 7,3mm Length, Carbide, Metric

Refer to the Linear Gauge documentation for more details

All products to be sold to commercial customers.
Product illustrations are without obligation. Product descriptions, in particular any and all technical specifications, are only binding when explicitly agreed upon.

Linear Gauge LG200 Series

Linear Gauge LG200 Series

IP67 G

This slim type linear gauge allows you to meet a variety of measurement needs.

- Differential square wave signal output enables use for a wide range of applications
- Due to its compact design, you can install it even where space is restricted
- Its photoelectric scale delivers high precision across the entire measuring range
- Extremely long-lasting due to linear ball-bearings in the spindle unit
- Perfect for use in tough environments, they come with a high IP class of IP67G
- Ideal for in-line measurement and embedded in automatic machines

Specifications

Scale	Photoelectric linear encoder
Stem Ø	8 mm
Contact point	Ø 3 mm carbide ball, thread: M 2,5 x 0,45
Repeatability (±2σ)	0,3 µm (20°)
Cable length	2 m
Power supply	5 V (4,5 V to 5,2 V), 80 mA max.
Output signal	90° phase difference, differential square wave (RS-422A equivalent) minimum edge distance 500 ns (0,1 µm type), 250 ns (0,1 and 0,5 µm type)
Environmental conditions	0° C to 50° C (20% to 80% rel. humidity, no condensation)
Bearing type	Linear ball bearing

Optional accessories

No.	Description
21HZA197	Extension Cable 5 m (10P-10P)
21HZA198	Extension Cable 10 m (10P-10P)
21HZA199	Extension Cable 20 m (10P-10P)
02ADE230	Air Drive Unit for Linear Gauges, 10 mm
02ADB680	Thrust Stem Set (for 10 mm model)
21HZA195	Exchange Plug (for P-Counter)
21HZA260	Exchange cable (for P counter)
238772	Silicone Rubber Boot (for 10 mm model)
542-075D	Linear Gauge Counter EH, (need 21HZA195)
542-071D	Linear Gauge Counter EH, (need 21HZA195)
Connectable Counter	
542-080	EJ-Counter -102N
542-081	EJ Counter-102NE

*the EH-counter need 21HZA195

Consumable spares

No.	Description
21HAA331	HNBR RUBBER CAP, 10 mm model
901312	Contact Element Ball Point, M2,5x0,45, 7,3mm Length, Carbide, Metric

Refer to the Linear Gauge documentation for more details

542-186/187/188

No.	Range [mm]	Accuracy	Measuring force	Resolution	Signal pitch [µm]	Max. response speed	Mass [g]
542-186	0 - 10	(1,5 + L/50) µm L=measured length in mm	0,8 N with spindle down, 0,75 N spindle horizontal, 0,7 N spindle upwards	0,001	4	1500 mm/s	175
542-187	0 - 10	(1,5 + L/50) µm L=measured length in mm	0,8 N with spindle down, 0,75 N spindle horizontal, 0,7 N spindle upwards	0,0005	2	1500 mm/s	175
542-188	0 - 10	(0,8 + L/50) µm L=measured length in mm	0,8 N with spindle down, 0,75 N spindle horizontal, 0,7 N spindle upwards	0,0001	0,4	400 mm/s	175

*1 Spindle DOWN/Horizontal/UP

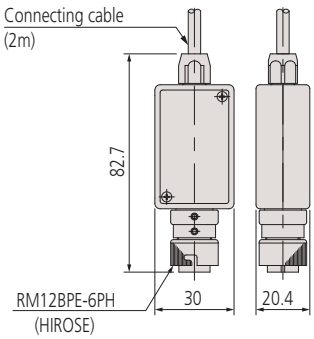

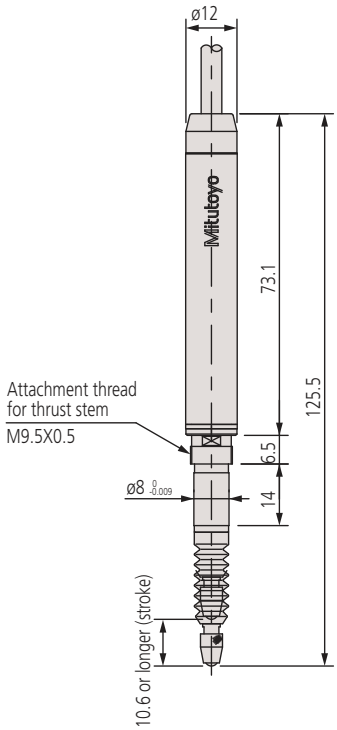

All products to be sold to commercial customers.
Product illustrations are without obligation. Product descriptions, in particular any and all technical specifications, are only binding when explicitly agreed upon.

Mitutoyo

Slim Head Linear Gauge LGB Series

This is an extra slim linear gauge that offers you the following benefits:

- Its differential square-wave signal output allows you to use it for a wide range of applications.
- It is very long lasting due to linear ball-bearings in the spindle unit.

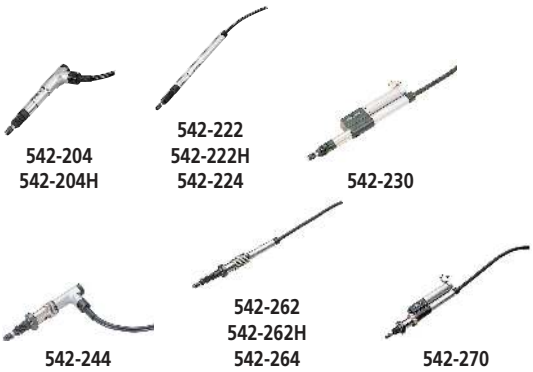

No.	Range [mm]	Accuracy	Measuring force	Stem Ø	Remarks	Mass [g]
542-244	0 - 5	2 µm	0,65 N with spindle down, 0,6 N spindle horizontal, 0,55 N spindle upwards	9,5 mm	-	160
542-204	0 - 5	2 µm	0,65 with spindle down, 0,6 N spindle horizontal, 0,55 N spindle upwards	8 mm	-	145
542-204H	0 - 5	1 µm	0,8 N with spindle down, 0,75 N spindle horizontal, 0,7 N spindle upwards	8 mm	-	145
542-222	0 - 10	2 µm	0,8 N with spindle down, 0,75 N spindle horizontal, 0,7 N spindle upwards	8 mm	-	150
542-222H	0 - 10	1 µm	0,8 N with spindle down, 0,75 N spindle horizontal, 0,7 N spindle upwards	8 mm	-	150
542-224	0 - 10	2 µm	0,6 N with spindle down, 0,55 N spindle horizontal, 0,5 N spindle upwards	8 mm	Low measuring force	165
542-230	0 - 10	2 µm	0,8 N with spindle down, 0,75 N spindle horizontal, 0,7 N spindle upwards	8 mm	w/pneumatic cylinder, 0,3 to 0,4 MPa	165
542-262	0 - 10	2 µm	0,8 N with spindle down, 0,75 N spindle horizontal, 0,7 N spindle upwards	9,5 mm	-	170
542-262H	0 - 10	1 µm	0,8 N with spindle down, 0,75 N spindle horizontal, 0,7 N spindle upwards	9,5 mm	-	170
542-264	0 - 10	2 µm	0,6 N with spindle down, 0,55 N spindle horizontal, 0,5 N spindle upwards	9,5 mm	Low measuring force	170
542-270	0 - 10	2 µm	0,8 N with spindle down, 0,75 N spindle horizontal, 0,7 N spindle upwards	9,5 mm	w/pneumatic cylinder, 0,3 to 0,4 MPa	170

*1 Spindle DOWN/Horizontal/UP

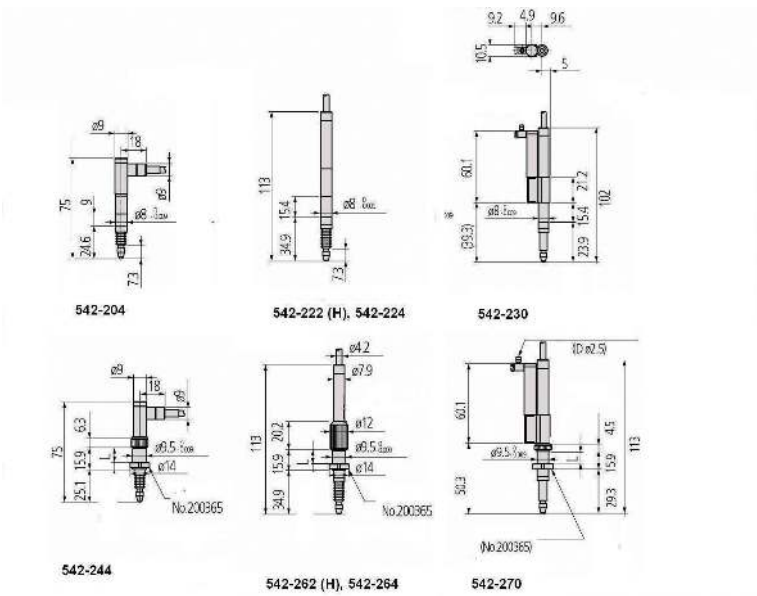

Specifications

Scale	Photoelectric linear encoder
Max. response speed	900 mm/s
Contact point	Ø3 mm carbide ball, thread: M 2,5 x 0,45
Resolution	0,001 mm
Signal pitch	4 µm
Cable length	2 m
Power supply	5 V (4,5 V to 5,2 V), 80 mA max.
Output signal	90° phase difference, differential square wave (RS-422A equivalent)
Environmental conditions	0°C to 40°C (20% to 80% rel. humidity, no condensation)
Bearing type	Linear ball bearing

Standard accessories

No.	Description
538610	Wrench Key/542

Optional accessories

No.	Description
902434	Extension Cable 5 m, for Linear Gauge
902433	Extension Cable 10m
902432	Extension Cable 20m
02ADE230	Air Drive Unit for Linear Gauges, 10 mm
542-015	Linear Gauge Counter EG, for Linear Gauge LGF, LGK, LGB,LGM, LGH
542-092-2	Linear Gauge Counter EB, for LGF, LGK, LGB, LG, LGM, LGH
542-075D	Linear Gauge Counter EH, (need 21HZA195)
542-071D	Linear Gauge Counter EH, (need 21HZA195)
542-080	EJ-Counter -102N
542-063	Linear Gauge Counter EV, for LGF, LGK, LGB, LG, LGM, LGH
542-081	EJ Counter-102NE
21HZA193	Connector Adapter Cable (for P-Gage)

Consumable spares

No.	Description
901312	Contact Element Ball Point, M2,5x0,45, 7,3mm Length, Carbide, Metric
238773	Rubber Cap, 542-204/206/246
238772	Silicone Rubber Boot (for 10 mm model)

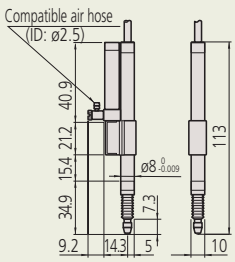

542-223

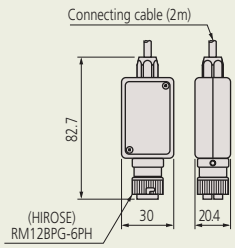

Connector for all Gauges

All products to be sold to commercial customers.
Product illustrations are without obligation. Product descriptions, in particular any and all technical specifications, are only binding when explicitly agreed upon.

Laser Hologauge LGH

Specifications

Scale	Laser-hologram measurement sensor
Max. response speed	700 mm/s
Contact point	Ø 3 mm carbide ball, thread: M 2,5 x 0,45
Output signal	90° phase difference, differential square wave (RS-422A equivalent)
Signal pitch	4 µm
Bearing type	High precision linear ball bearing
Environmental conditions	0C to 40°C (20% to 80% rel. humidity, no condensation)
Delivered	With Display Unit

Standard accessories

No.	Description
538610	Wrench Key/542

Optional accessories

No.	Description
971750	Laser Hologauge stand
971753	Spindle lifting cable
971751	Gage Fixture (A) LHG
971752	Fastening system, Laser Hologage

Consumable spares

No.	Description
901312	Contact Element Ball Point, M2,5x0,45, 7,3mm Length, Carbide, Metric

Refer to the Linear Gauge documentation for more details

This is a highly precise dial gauge that uses optical interference so you can measure with unparallelled accuracy.
The Mitutoyo Laser Hologage offers you the following benefits:

- Through optical interference of laser light through a diffraction grating it gives you an extremely precise holographic scale with 0,00001mm resolution
- You can use the Laser Hologage for extremely precise measurements, as well as a transducer in ultra-precise positioning and control systems.

542-715D

No.	Range [mm]	Accuracy	Measuring force	Resolution [µm]	Stem Ø	Repeatability	Mass [g]
542-715D	0 - 10	0,2 µm	0,65 N with spindle down, 0,55 N spindle horizontal, 0,45 N spindle upwards	0,01	15 mm	0,1 µm	220
542-716D	0 - 10	0,2 µm	0,12 N with spindle down/ - / -	0,01	15 mm	0,1 µm	220

*1 Spindle DOWN/Horizontal/UP

All products to be sold to commercial customers.
Product illustrations are without obligation. Product descriptions, in particular any and all technical specifications, are only binding when explicitly agreed upon.

Laser Hologauge LGH

This is a highly precise dial gauge that uses optical interference so you can measure with unparallelled accuracy.
The Mitutoyo Laser Hologage offers you the following benefits:

- Through optical interference of laser light through a diffraction grating it gives you an extremely precise holographic scale with 0,005 µm resolution.
- The measuring head is very compact, enabling you to build it into various systems far less expensively than conventional laser technology.
- You can use the Laser Hologage for measuring extremely precise parts, as well as a transducer in ultra-precise positioning and control systems.

542-720D

Laser Hologage supplied with Display Unit
(2 axis counter)

No.	Range [mm]	Accuracy	Measuring force	Resolution [µm]	Stem Ø	Repeatability	Mass [g]
542-720D	0-10	0,1µm	0,65 N with spindle down, 0,55 N spindle horizontal, 0,45 N spindle upwards	0,005	15 mm	0,02 µm	220
542-721D	0 - 10	0,1µm	0,1 N with spindle down/ - / -	0,005	15 mm	0,02 µm	220

*1 Spindle DOWN/Horizontal/UP

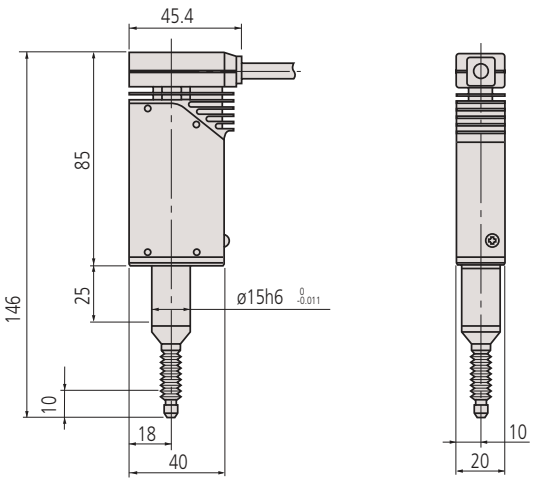

Functions	
Digimatic data output	●
ON/OFF	●
ZERO SET	●
PRESET	●
Error display/output	●
MAX / MIN / difference measurement	●
Mm / inch switching	●
RS-232C Output	●
USB Output for SENSORPAK	●
Extern tolerance set (when a PC is used)	●
Counting direction switchable	●

Specifications

Scale	Laser-hologram measurement sensor
Max. response speed	250 mm/s
Contact point radius	R=5 mm carbide
Bearing type	High precision linear ball bearing
Environmental conditions	10°C to 30°C (30% to 70% rel. humidity, no condesation)
Delivered	With Display Unit

Standard accessories

No.	Description
538610	Wrench Key/542
542-074D	Linear Gauge Counter EH, for LGH

Optional accessories

No.	Description
971750	Laser Hologauge stand
971753	Spindle lifting cable
971751	Gage Fixture (A) LHG
971752	Fastening system, Laser Hologage

Consumable spares

No.	Description
901312	Contact Element Ball Point, M2,5x0,45, 7,3mm Length, Carbide, Metric

Refer to the Linear Gauge documentation for more details

All products to be sold to commercial customers.
Product illustrations are without obligation. Product descriptions, in particular any and all technical specifications, are only binding when explicitly agreed upon.

EJ Counter and Interfaces for Linear Gauges

Functions	
ZERO SET	■
Origin detection	■
PRESET	■
External HOLD	■
External CLEAR	■
External 1 / 2 SELECT	■
MAX / MIN / difference measurement	■
Internal calculation	■
Tolerance indicator	■
Extern tolerance set (when a PC is used)	■
Tolerance judgement (3 or 5 step)	■
Counting direction switchable	■
External PRESET / ZERO	■

Specifications

Operating temperature / humidity	0°C to 50°C / 20% to 80% rel. humidity, no condensation
Storage temperature / humidity	-10°C to 60°C / 20% to 80% rel. humidity, no condensation
Power supply	Input voltage: 10 - 27V DC supplied from EJ-Counter Maximum power consumption: Single EJ Counter: 3W or less Maximum consolidation: 30W or less

Optional accessories

No.	Description
21HZA157	DIN Stoppers
21HZA149	USB I/F Unit for EJ Counter
21HZA186	CC-Link / USB I/F Unit for EJ Counter
21HZA193	Connector Adapter Cable (for P-Gage)
21HZA194	Connector Adapter Cable (for Z-Gage)
21HZA209	DC Jack with Pin Terminal
357651	AC-Adapter 12V, CEE Type, for SJ-210/ SJ-310/LH-600/QM-Data 200
02ZAA020	AC-Cordset CEE
02ZAA030	AC-Cordset BS

The EJ-Counter is targeted at secondary and automatic embedded markets as well as conventional measurement rooms.

- Multipoint measuring systems with a maximum of 16 gauges can be configured.
- The EJ-Counter is attached to a DIN rail for use. Due to the small size of the unit, it can be installed inside of switchboards /equipment. When using multiple EJ Counters linked together, connection of power to one EJ Counter also supplies power to the other linked counters.
- In addition, through the industrial I/F unit (sold separately), data can be managed on the upper side, and it is possible to support smart factories such as IoT and M2M.
- Easy setup with the LG QuickSetup Tool software (free of charge) (USB interface is required).

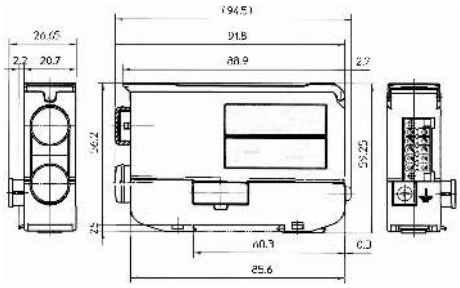

EJ-102N + 21HZA186

Metric

EJ-Counter-102N

No.	Mass [g]	Max. input frequency	Input signal type	Applicable gauge	Gauge inputs	External input / output
542-080	120	5 MHz	differential square wave (RS422A equivalent)	LG100, LG200, LGF*, LGF(Z)*, LGK*, LGB*, LG* (*Exchange cable required / sold separately)	2	In: 4 ports / Out: 4 ports Applicable communications standards: Supported by optional interface unit

Metric/Inch

EJ-Counter-102NE

No.	Mass [g]	Max. input frequency	Input signal type	Applicable gauge	Gauge inputs	External input / output
542-081	120	5 MHz	differential square wave (RS422A equivalent)	LG100, LG200, LGF*, LGF(Z)*, LGK*, LGB*, LG* (*Exchange cable required / sold separately)	2	In: 4 ports / Out: 4 ports Applicable communications standards: Supported by optional interface unit

All products to be sold to commercial customers.
Product illustrations are without obligation. Product descriptions, in particular any and all technical specifications, are only binding when explicitly agreed upon.

Mitutoyo

EJ Counter and Interfaces for Linear Gauges

Interface

No.	Interface specification		
21HZA149	**USB**		
	Baude rate:	USB 2.0 Full speed (12Mbps)	
	Power:	Power supplied from EJ counter	
	Connector Type:	Type C	
	Industrial I/F	none	
21HZA186	**USB**		
	Baude rate:	USB 2.0 Full speed (12Mbps)	
	Power:	Power supplied from EJ counter	
	Connector Type:	Type C	
	Industrial I/F	**CC-Link Ver 1.10**	**CC-Link Ver 2.00**
	Station Type:	Remote device station	Remote device station
	Station occupied:	2 Stations RX/RY 64 each, RWw/Rwr 8 words each	4 Stations RX/RY 448 each, RWw/Rwr 64 words each
	Expanded cyclic transmission:	disable	Enabled (x4)
	Data transfered:	Tolerance judgment result	current value data (No unit, signed 32 bit data) Tolerance judgment result
	Station number setting:	1-63	1 -61
	Baud rate:	156kbps, 625kbps, 2.5 Mbps, 5 Mbps, 10 Mbps	156kbps, 625kbps, 2.5 Mbps, 5 Mbps, 10 Mbps
21HZA187	**USB**		
	Baude rate:	USB 2.0 Full Speed (12 Mbps)	
	Power:	Power supplied from EJ counter	
	Connector Type:	Type C	
	Industrial I/F	PROFINET RT (RT Class1)	
	Data transfered:	Current value data (No unit, signed 32 bit data), Tolerance judgment result	
	Communication ports	RJ45 2 ports	
	Auto MID	YES (cross cable and straight cable)	

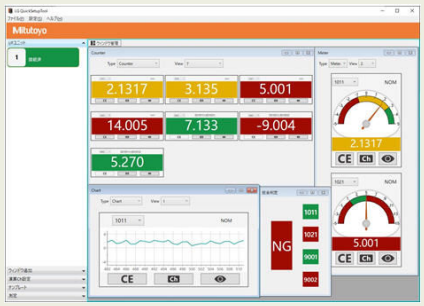

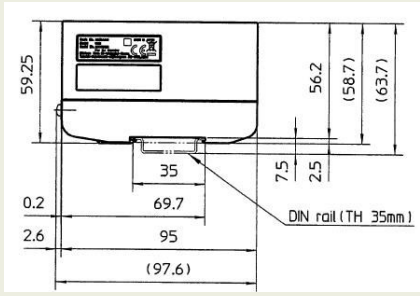

USB (21HZA149)

CC-Link (21HZA186)

PROFINET (21HZA187)

All products to be sold to commercial customers.
Product illustrations are without obligation. Product descriptions, in particular any and all technical specifications, are only binding when explicitly agreed upon.

EC Counter for Linear Gauges

Functions	
Digimatic data output	●
ON/OFF	●
ZERO SET	●
PRESET	●
ABS/INC	●
Error display/output	●
External HOLD	●
Mm / inch switching	●
Counting direction switchable	●
External PRESET / ZERO	●

Specifications

Power supply	+ 9 - 12 V DC 400 mA or AC adapter
Display	Green LED display, 6 digits plus sign
Tolerance judgement display	LED display (3 steps: Amber, Green, Red)

Optional accessories

No.	Description
936937	Digimatic Cable, Flat 10-Pin Type, 1m
965014	Digimatic Cable, Flat 10-Pin Type, 2m
02AZD790D	U-WAVE-T Connection Cable D, Flat 10-Pin Type
06AFM380D	USB Input Tool Direct (Digimatic USB), Flat 10-Pin Type

Refer to the Linear Gauge documentation for more details

This Digimatic display can be connected to any device with Digimatic output, including micrometers, indicators, calipers and LGS/LGD Linear Gauge.
It offers you the following benefits:

- It has a data output and tolerance evaluation function.

542-007

No.	Resolution [mm]	Input signal type	Applicable gauge	Gauge inputs
542-007D	0,001/0,01 (automatic setting by gauge)	Digimatic code	Digimatic Indicator Digimatic Scale Units Linear Gauge LGS/LGD	1
542-007E	0,001/0,01 (automatic setting by gauge)	Digimatic code	Digimatic Indicator Digimatic Scale Units Linear Gauge LGS/LGD	1

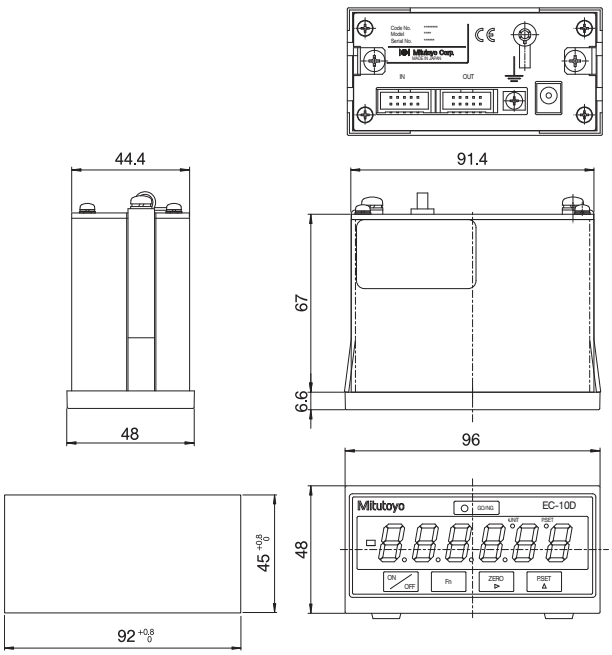

542-007

All products to be sold to commercial customers.
Product illustrations are without obligation. Product descriptions, in particular any and all technical specifications, are only binding when explicitly agreed upon.

EG Counter for Linear Gauges

This is a compact counter with a control panel that offers you the following benefits:

- Its I/O control function enables tolerance judgement evaluation (3 or 5 steps) or parallel BCD output function.

542-015

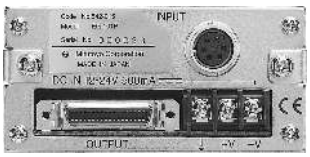

542-017

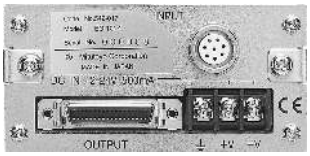

542-016

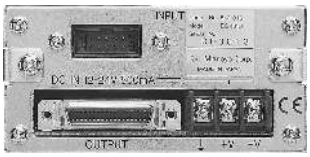

No.	Resolution [mm]	Max. input frequency	Input signal type	Applicable gauge	Gauge inputs	Mass [g]
542-015	0,0001/0,0005/ 0,001/0,005/0,01	1,25 MHz (2-phase square wave), response speed depends on gauge specification	Differential square-wave	LGF, LGK, LGB, LG, LGM, LGH (excluding LGF-Z with reference point, LGH with 0,01 µm resolution), LG100 with connector adapter plug 21HZA195	1	400
542-017	0,0001/0,0005/ 0,001/0,005/0,01	1,25 MHz (2-phase square wave), response speed depends on gauge specification	Differential square-wave with reference point	LGF-Z with reference point, LG100 with connector adapter plug 21HZA196	1	400
542-016	0,001/0,01 (automatic setting by gauge)	-	Digimatic code	Digimatic Indicator Digimatic Scale Units Linear Gauge LGS/LGD	1	400

Functions	542-015 542-017	542-016
ZERO SET	●	●
PRESET	●	●
ABS/INC		●
BCD output	●	●
Error display/output	●	●
MAX / MIN / Difference measurement	●	●
Mm / inch switching	●	●
External peak-hold cancel	●	●
Counting direction switchable	●	●
External PRESET / ZERO	●	●

Specifications

Power supply	Terminal block (M3 screws) 12 to 24 V DC, 6W or less (500 mA max.) external supply, AC-adapter is not standard accessory
Delivered	AC adapter, AC cable and terminal connecting cables are not included. Please see accessories below.
Display	Green LED display 6 digits plus sign
Tolerance judgement display	LED display (3 steps : Amber, Green, Red/5 steps : Amber, Amber flashing, Green, Red flashing, Red)

Optional accessories

No.	Description
02ADB440	Data Plug I/O Interface, for Litematic
02ZAA020	AC-Cordset CEE
02ADD930	Connecting Cable, 3-Wires for AC Adapter
02ADF180	External Switch Box
357651	AC-Adapter 12V, CEE Type, for SJ-210/ SJ-310/LH-600/QM-Data 200

02ADB440

02ADD930, 357651, 02ZAA020

All products to be sold to commercial customers.
Product illustrations are without obligation. Product descriptions, in particular any and all technical specifications, are only binding when explicitly agreed upon.

EB Counter for Linear Gauges

- Its I/O control function enables tolerance judgement evaluation (3 or 5 steps) or serial BCD output function.
- Dynamic measurement possible with simplified analog output.

Functions	542-092-2	542-094-2	542-093-2
ZERO SET	●	●	●
PRESET	●	●	●
ABS/INC			●
BCD output	●	●	●
Error display/output	●	●	●
External HOLD	●	●	●
MAX / MIN / Difference measurement	●	●	●
Mm / inch switching	●	●	●
Output I/O	●	●	●
Analogue output			
Digimatic data output	●	●	●
Counting direction switchable	●	●	●
External PRESET / ZERO	●	●	●

542-092-2

542-094-2

542-093-2

No.	Resolution [mm]	Accuracy	Max. input frequency	Input signal type	Applicable gauge	Gauge inputs	Mass [g]
542-092-2	0,0001/0,0005/ 0,001/0,005/0,01	± 5 % (0 V to 5 V) and ± 0.5 % (2.5 V ± 200 mV before decalage reglage)	1,25 MHz (2-phase square wave), response speed depends on gauge specification	Differential square-wave	LGF, LGK, LGB, LG, LGM, LGH (excluding LGF-Z with reference point, LGH with 0,01 µm resolution), LG100 with connector adapter plug 21HZA195	1	400
542-094-2	0,0001/0,0005/ 0,001/0,005/0,01		1,25 MHz (2-phase square wave), response speed depends on gauge specification	Differential square-wave with reference point	LGF-Z with reference point, LG100 with connector adapter plug 21HZA196	1	400
542-093-2	0,001/0,01 (automatic setting by gauge)		-	Digimatic code	Digimatic Indicator Digimatic Scale Units Linear Gauge LGS/LGD	1	400

Specifications

Power supply	Terminal block (M3 screws) 12 to 24 V DC, 6W or less (500 mA max.) external supply, AC-adapter is not included
Delivered	AC adapter, AC cable and terminal connecting cables are not included. Please see accessories below.
Display	Green LED display, 6 digit plus sign
Tolerance judgement display	LED display (3 steps : Amber, Green, Red/5 steps : Amber, Amber flashing, Green, Red flashing, Red)

Optional accessories

No.	Description
936937	Digimatic Cable, Flat 10-Pin Type, 1m
965014	Digimatic Cable, Flat 10-Pin Type, 2m
02ZAA020	AC-Cordset CEE
02ADD930	Connecting Cable, 3-Wires for AC Adapter
02AZD790D	U-WAVE-T Connection Cable D, Flat 10-Pin Type
02ADB440	Data Plug I/O Interface, for Litematic
06AFM380D	USB Input Tool Direct (Digimatic USB), Flat 10-Pin Type
02ADF180	External Switch Box

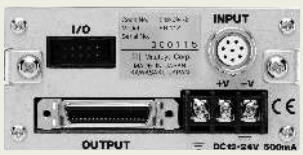

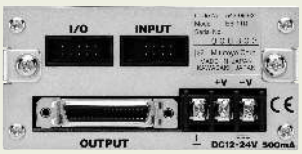

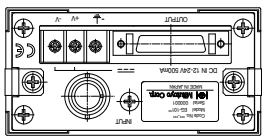

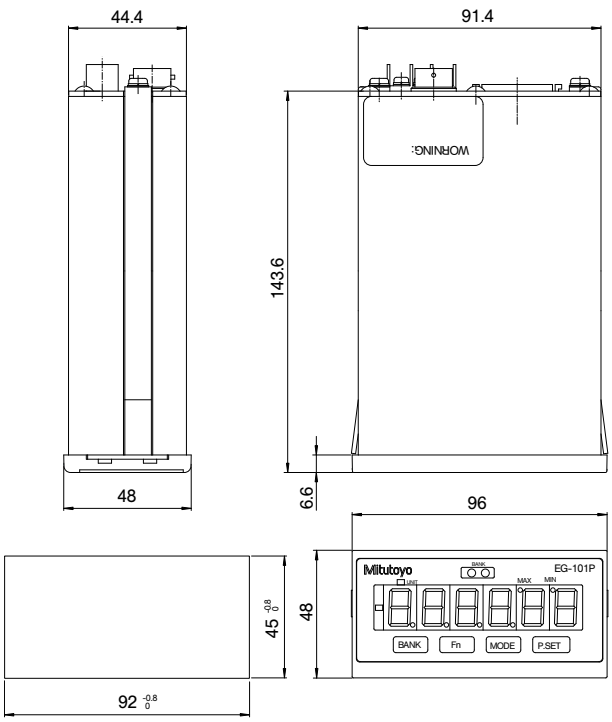

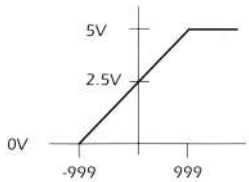

Specifications :
Output voltage: 2.5 V + counting value x voltage resolution (25mV/2.5 mV]
Full scale : 0 to 5 V
Response speed: 10 Hz (update time 5 MS)
Accuracy : ± 5 % (0 to 5 V) ± 0.5 % (2.5 V ± 200 mV, after Offset adjustment)
The accuracy is indicated with respect to full scale 5 V
Load resistance: 300 kΩ or more

All products to be sold to commercial customers.
Product illustrations are without obligation. Product descriptions, in particular any and all technical specifications, are only binding when explicitly agreed upon.

EH Counter for Linear Gauges

Multi-functional Counter

- The standard RS-232C and USB interfaces allows easy communication with an external PC (the USB can only be used with SENSORPAK).
- The built-in networking function allows you to easily create a multi-point measuring system (RS link, max. 10 Counter).
- The 2-gauge input type can calculate additions and subtractions between two gauges.

542-075D

542-071D, 542-073D, 542-072D

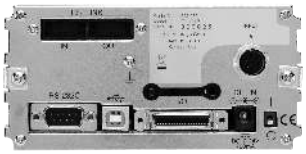

542-075D

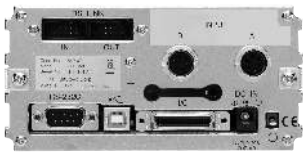

542-071D

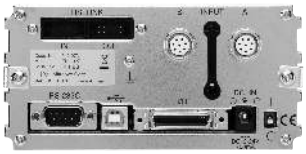

542-073D

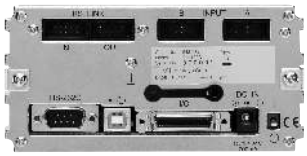

542-072D

No.	Resolution [mm]	Max. input frequency	Input signal type	Applicable gauge	Gauge inputs	Mass [g]
542-075D	0,0001/0,001/0,01	2,5 MHz (2-phase square wave), response speed depends on gauge specification	Differential square-wave	LGF, LGK, LGB, LG, LGM, LGH (excluding LGF-Z with reference point, LGH with 0,01 µm resolution), LG100 with connector adapter plug 21HZA195	1	760
542-071D	0,0001/0,001/0,01	2,5 MHz (2-phase square wave), response speed depends on gauge specification	Differential square-wave	LGF, LGK, LGB, LG, LGM, LGH (excluding LGF-Z with reference point, LGH with 0,01 µm resolution), LG100 with connector adapter plug 21HZA195	2	800
542-073D	0,0001/0,001/0,01	2,5 MHz (2-phase square wave), response speed depends on gauge specification	Differential square-wave with reference point	LGF-Z with reference point, LG100 with connector adapter plug 21HZA196	2	800
542-072D	0,001/0,01 (automatic setting by gauge)	-	Digimatic code	Digimatic Indicator Digimatic Scale Units Linear Gauge LGS/LGD	2	800

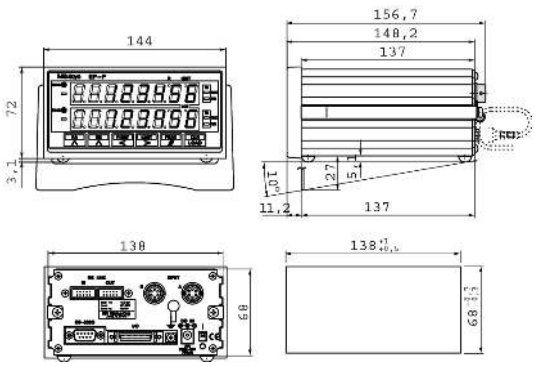

Functions	542-071D 542-073D	542-072D	542-075D
Digimatic data output	●	●	●
ON/OFF	●	●	●
ZERO SET	●	●	●
PRESET	●	●	●
Sum/difference calculation	●	●	
ABS/INC		●	
BCD output	●	●	●
Error display/output	●	●	●
External HOLD	●	●	●
MAX / MIN / Difference measurement	●	●	●
Mm / inch switching	●	●	●
Lower digit blank-out			●
RS link	●	●	●
RS-232C Output	●	●	●
I/O Output	●	●	●
USB Output for SENSORPAK	●	●	●
Extern tolerance set (when a PC is used)	●	●	●
Counting direction switchable	●	●	●
External PRESET / ZERO	●	●	●

Specifications

Power supply	Via AC Adapter (12-24 V DC, 700 mA)
Display	Green LED display, 8 digit plus sign
Tolerance judgement display	LED display (3 steps : Amber, Green, Red/5 steps : Amber, Amber flashing, Green, Red flashing, Red)

Standard accessories

No.	Description
02ZAA020	AC-Cordset CEE

Optional accessories

No.	Description
02ADB440	Data Plug I/O Interface, for Litematic
02AZD790D	U-WAVE-T Connection Cable D, Flat 10-Pin Type
936937	Digimatic Cable, Flat 10-Pin Type, 1m
965014	Digimatic Cable, Flat 10-Pin Type, 2m
12AAA807D	Cable RS-232C 2m Null Modem Type, Crossed Type
06AFM380D	USB Input Tool Direct (Digimatic USB), Flat 10-Pin Type

02ADB440

All products to be sold to commercial customers.
Product illustrations are without obligation. Product descriptions, in particular any and all technical specifications, are only binding when explicitly agreed upon.

EV Counter for Linear Gauges

Functions	542-063 542-067	542-064
ZERO SET	●	●
PRESET	●	●
ABS/INC		●
Error display/output	●	●
External HOLD	●	●
MAX / MIN / Difference measurement	●	●
Mm / inch switching	●	●
RS link	●	●
RS-232C Output	●	●
Counting direction switchable	●	●
External PRESET / ZERO	●	●
Calculation function (with formula)	●	●

- You can connect up to six gauges, and by using the RS Link function, you can connect up to 10 EV Counters to one PC.
- Multi-point measuring systems with a maximum of 60 gauges can be configured.
- You can select several different output modes, including I/O output for tolerance judgement and Segment output, BCD data output and RS-232C output.

542-063

542-067

542-064

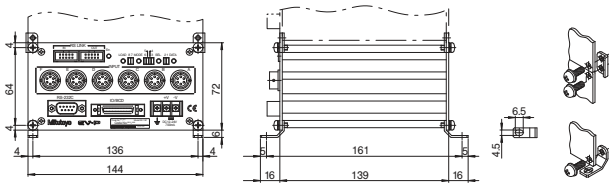

542-063

Specifications

Power supply	Terminal connector (M3 screws), 12 to 24V, (700 mA max. for EV-Counter) (200 mA max. for D-EV Display unit), AC-adapter is not standard accessory
Delivered	AC adapter, AC cable and terminal connecting cables are not included. Please see accessories below.
Display	D EV Unit: red LED display, 6 digit plus sign 8 digit internal to EV-Counter
Tolerance judgement display	LED display (3 steps: Amber, Green, Red)

No.	Resolution [mm]	Max. input frequency	Input signal type	Applicable gauge	Gauge inputs	Mass [g]
542-063	0,0005/0,001/0,005/0,01 (no display)	1,25 MHz (2-phase square wave), response speed depends on gauge specification. Max.counting speed: 5MHz	Differential square-wave	LGF, LGK, LGB, LG, LGM, LGH (excluding LGF-Z with reference point, LGH with 0,01 µm resolution), LG100 with connector adapter plug 21HZA195	6	910
542-067	0,0005/0,001/0,005/0,01 (no display)	1,25 MHz (2-phase square wave), response speed depends on gauge specification. Max.counting speed: 5MHz	Differential square wave with reference point	LGF-Z with reference point, LG100 with connector adapter plug 21HZA196	6	910
542-064	0,001/0,01 (automatic setting by gauge)	-	Digimatic code	Digimatic Indicator Digimatic Scale Units Linear Gauge LGS/LGD	6	830

Optional accessories

No.	Description
02ADB440	Data Plug I/O Interface, for Litematic
02ADD950	External Switch Box, EB Counter
12AAA807D	Cable RS-232C 2m Null Modem Type, Crossed Type
02ZAA020	AC-Cordset CEE
02ADD930	Connecting Cable, 3-Wires for AC Adapter
936937	Digimatic Cable, Flat 10-Pin Type, 1m
965014	Digimatic Cable, Flat 10-Pin Type, 2m

02ADD400

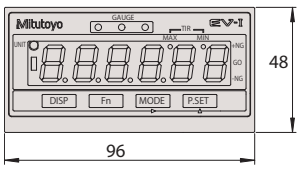

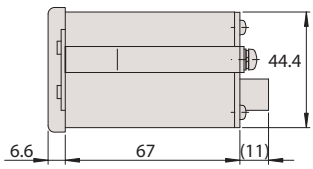

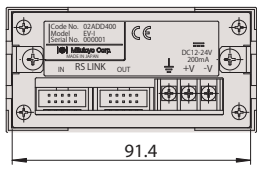

All products to be sold to commercial customers.
Product illustrations are without obligation. Product descriptions, in particular any and all technical specifications, are only binding when explicitly agreed upon.

Mitutoyo

Inductive Probe Mu-Checker

- A half-bridge circuit connection.
- 519-321 lever head is provided with a direction switch.
- The contact point of 519-326 lever head can be orientated at any direction.

519-521

519-522

519-326

519-331

519-385

519-347

519-346

Cartridge type

No.	Range	Stroke [mm]	Linearity [%]	Measuring force [N]	Delivered
519-331	± 0,5	± 0,65	± 0,5	0,25	with 2 m cable, carbide-tipped stylus 1 mm (520940), stylus 2 mm (520939), stylus 3 mm (520938)
519-385	± 1,5	+ 2,3 - 1,7	± 0,3	0,7 ± 0,14 N	with 2 m cable, carbide-tipped stylus 1 mm (520940), stylus 2 mm (520939), stylus 3 mm (520938)
519-346	± 0,25	+0,34 -0,26	± 0,3	0,7	with 2 m cable, carbide-tipped stylus 1 mm (520940), stylus 2 mm (520939), stylus 3 mm (520938)
519-347	± 0,5	+ 0,85 - 0,65	± 0,3	0,7	with 2 m cable, carbide-tipped stylus 1 mm (520940), stylus 2 mm (520939), stylus 3 mm (520938)

Lever type

No.	Range	Stroke [mm]	Linearity [%]	Ball ø [mm]	Measuring force [N]	Delivered	Mass [g]
519-521	± 0,5	± 0.6	± 0,3	2 mm	0,2	with 2 m cable, carbide-tipped stylus 1 mm (520940), stylus 2 mm (520939), stylus 3 mm (520938)	112
519-522	± 0,5	± 0.6	± 0,3	2 mm	0,02	with 2 m cable, carbide-tipped stylus 1 mm (520940), stylus 2 mm (520939), stylus 3 mm (520938)	112
519-326	± 0,5	± 0.6	± 0,3	2 mm	0,15	with 2 m cable, carbide-tipped stylus 1 mm (520940), stylus 2 mm (520939), stylus 3 mm (520938)	112

Specifications

Scale	Linear Voltage differential transformer (half bridge)
Calibration voltage	3 V rms (sine wave)
Calibration frequency	5 kHz
Connector	DIN 5pin

Optional accessories

No.	Description
900321	Swivel Clamp, for D=4/8mm, Dovetail
900209	Holding Bar for Swivel Clamp, 9x9mm, 100mm Length
900211	Holding Bar for Swivel Clamp, D=8mm, 115mm Length

902321

902802

902804

900209

900211

All products to be sold to commercial customers.
Product illustrations are without obligation. Product descriptions, in particular any and all technical specifications, are only binding when explicitly agreed upon.

Inductive Probe Mu-Checker

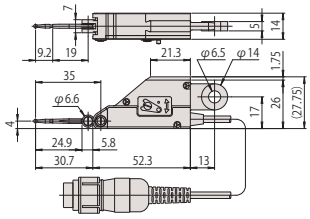

519-521

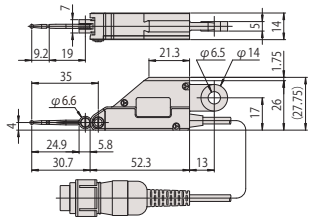

519-522

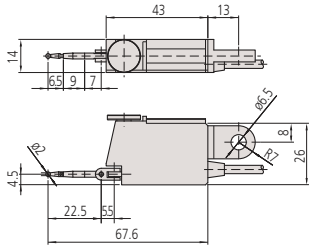

519-326

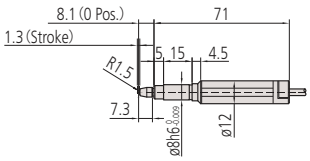

519-331

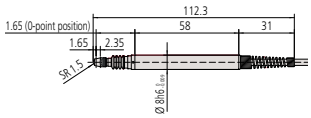

519-385

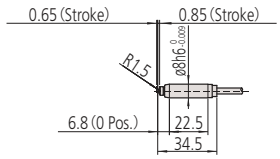

519-347

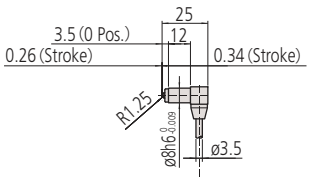

519-346

All products to be sold to commercial customers.
Product illustrations are without obligation. Product descriptions, in particular any and all technical specifications, are only binding when explicitly agreed upon.

Mitutoyo

Display Mu-Checker

- The Analog Mu-Checker can output digital data via an optional interface unit.

519-551D

519-553D

519-561D

No.	Response speed	Linearity [%]	Instant zero-setting effective zone	Channels	Mass [kg]
519-551D	approx. 0,3s	± 1%/FS (Added to a head's measuring error)	± 15%/FS	1	2.4
519-553D	approx. 0,3s	± 1%/FS (Added to a head's measuring error)	± 15%/FS	2	2.4
519-561D	approx. 0,3s	± 3 digit ± 1 (added to a head measuring error)	± 0,68 mm	2	2.6

FS=Full Screen

Functions	519-551D	519-553D	519-561D
ZERO SET	●	●	●
Digimatic Output			●
Calculation function (with formula)		●	●

Specifications

Output Gain	± 1V/FS Linearity: ±0,1%/FS (Excepts a head's measuring error)
Dimensions (WxDxH)	134 x 183 x 208 mm

Optional accessories

No.	Description
936937	Digimatic Cable, Flat 10-Pin Type, 1m
965014	Digimatic Cable, Flat 10-Pin Type, 2m
934795	Analog output cable A, 519-551 / 553 / 561
529035	External output connector analog 7Pin, 519-551 / 553 / 561
934386	Extension cable (5m), 519-551 / 553 / 561 / 355

*936937 and 965014 for 519-561D only

All products to be sold to commercial customers.
Product illustrations are without obligation. Product descriptions, in particular any and all technical specifications, are only binding when explicitly agreed upon.

LITEMATIC VL-50
Motorized low force, high precision gauges

Functions	
ABS / INC (INC ZERO)	●
Data output	●
PRESET	●
Key lock	●
Mm / inch switching	●
Tolerance input (3 or 5 levels)	●
Motorized plunger movement	●
Mode : max-min (TIR) reading	●
Counting direction switchable	●

Specifications

Measuring range (inside)	0-50 mm
Data output	DIGIMATIC RS 232C INTERFACE I/O

Optional accessories

No.	Description
936937	Digimatic Cable, Flat 10-Pin Type, 1m
02ADB440	Data Plug I/O Interface, for Litematic
957460	Litematic Head Stand
06AFM380D	USB Input Tool Direct (Digimatic USB), Flat 10-Pin Type
965014	Digimatic Cable, Flat 10-Pin Type, 2m
12AAA807D	Cable RS-232C 2m Null Modem Type, Crossed Type
02AZD790D	U-WAVE-T Connection Cable D, Flat 10-Pin Type

Consumable spares

No.	Description
901312	Contact Element Ball Point, M2,5x0,45, 7,3mm Length, Carbide, Metric

Refer to the LITEMATIC documentation for more details

This is a high-accuracy gauge head with a separate controller.
The LITEMATIC VL-50 offers you the following benefits:

- It has a measuring force of **0,01 N** (1 gf) and a resolution of 0,01 µm.
- Its constant and low measuring force makes it especially suitable for measuring soft materials such as rubber, plastic, film thicknesses or sensitive form parts.
- The motor driven plunger gives you a range of approach and retraction speeds for safe and easy operation.
- The head is supplied with a separate controller so you can mount it in a measurement fixture, or on the optional comparator stand.

318-22xD (957460 is optional)

318-22xD

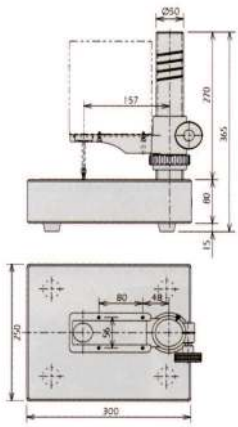

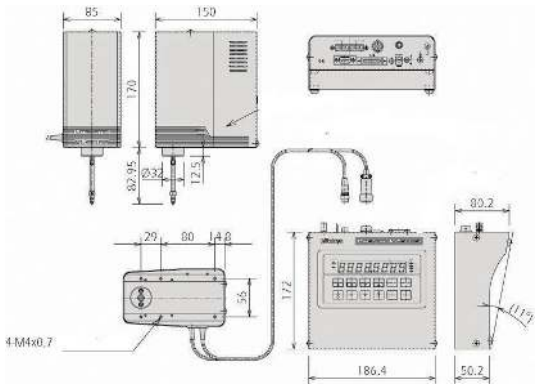

957460 Comparator stand

No.	Accuracy	Measuring force [N]	Type
318-226D	**(0,5 + L/100)**µm L = Measurement height	**0,01 N** (1 gf)	VL-50S-B
318-227D	**(0,5 + L/100)**µm L = Measurement height	**0,15 N** (15 gf)	VL-50S-15-B
318-228D	**(0,5 + L/100)**µm L = Measurement height	**1 N** (102 gf)	VL-50S-100-B

All products to be sold to commercial customers.
Product illustrations are without obligation. Product descriptions, in particular any and all technical specifications, are only binding when explicitly agreed upon.

Mitutoyo

LITEMATIC VL-50
Motorized low force, high precision gauges

This is a high-accuracy motorised measuring machine with safe and easy operation.
The LITEMATIC VL-50 offers you the following benefits:

- It has a measuring force of **0,01 N** (1 gf) and a resolution of 0,01 µm.
- Its constant and low measuring force makes it especially suitable for measuring soft materials such as rubber, plastic, film thicknesses or sensitive form parts.
- The motor driven plunger gives you a range of approach and retraction speeds for safe and easy operation.

318-22xD

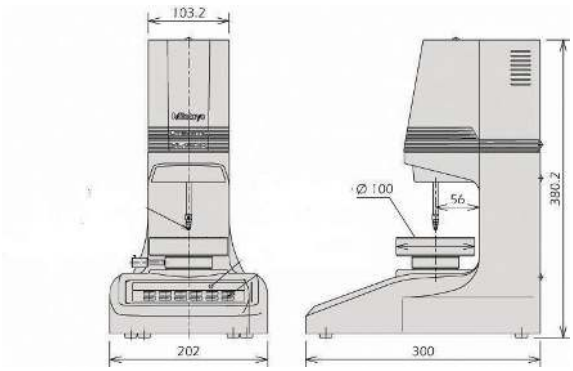

318-22xD

No.	Accuracy	Measuring force [N]	Type
318-221D	**(0,5 + L/100)** µm L = Measurement height	**0,01 N** (1 gf)	VL-50 B
318-222D	**(0,5 + L/100)** µm L = Measurement height	0,15 N (15 gf)	VL-50-15-B
318-223D	**(0,5 + L/100)** µm L = Measurement height	1 N (102 gf)	VL-50-100-B

Functions	
ABS / INC (INC ZERO)	■
Data output	■
PRESET	■
Key lock	■
Mm / inch switching	■
Tolerance input (3 or 5 levels)	■
Motorized plunger movement	■
Mode : max-min (TIR) reading	■
Counting direction switchable	■

Specifications

Measuring range (inside)	0-50 mm
Data output	Digimatic RS-232C INTERFACE I/O

Optional accessories

No.	Description
02ADB440	Data Plug I/O Interface, for Litematic
02AZD790D	U-WAVE-T Connection Cable D, Flat 10-Pin Type
06AFM380D	USB Input Tool Direct (Digimatic USB), Flat 10-Pin Type
12AAA807D	Cable RS-232C 2m Null Modem Type, Crossed Type
936937	Digimatic Cable, Flat 10-Pin Type, 1m
965014	Digimatic Cable, Flat 10-Pin Type, 2m

Consumable spares

No.	Description
901312	Contact Element Ball Point, M2,5x0,45, 7,3mm Length, Carbide, Metric

Refer to the LITEMATIC documentation for more details

All products to be sold to commercial customers.
Product illustrations are without obligation. Product descriptions, in particular any and all technical specifications, are only binding when explicitly agreed upon.

Laser Scan Micrometer Measuring Unit and Display Unit Package
Page 384

Laser Scan Micrometer Measuring Unit
Page 385

Laser Scan Micrometer
Page 388

Laser Scan Micrometer Display Unit
Page 389

Laser Scan Micrometer Optional Accessories
Page 391

All products to be sold to commercial customers.
Product illustrations are without obligation. Product descriptions, in particular any and all technical specifications, are only binding when explicitly agreed upon.

Mitutoyo

Laser Scan Micrometer Measuring Unit and Display Unit Package

The LSM-6902H is a high accuracy, non-contact measuring system that uses a high speed scanning laser beam to accurately measure workpieces. It is ideal for measuring items that are difficult or impossible to measure with conventional instruments, such as elastic parts or soft parts that might deform under pressure.
The LSM-6902H offers you the following benefits:

- Suitable for pin and plug gauge measurements.
- It has a wide measuring range of 0,1 mm to 25 mm.
- Provides ultra-high accuracy with a linearity of ±0,5 µm over the entire measuring range and ±(0,3+0,1ΔD) µm in the narrow range.
- Ultra-high repeatability of ±0,045 µm.

LSM-6902H display unit and LSM-6902H measuring unit

No.	Range [mm]	Resolution (selectable)
544-498-1D	0.1 - 25	0,01-10 µm

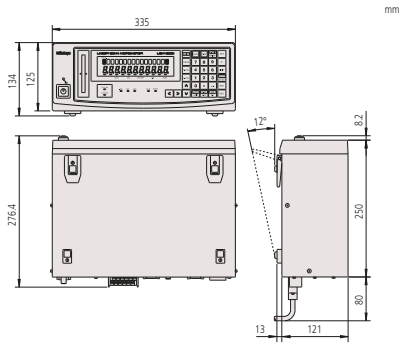

LSM-6902H display unit

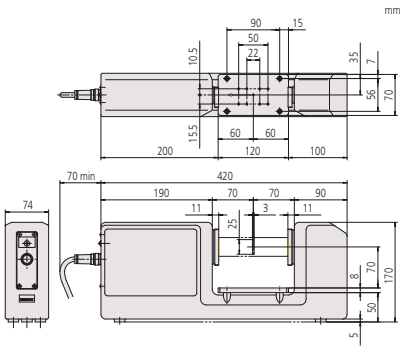

LSM-6902H measuring unit

Functions	
GO/±NG judgement	■
OFFSET	■
Sample Measurement	■
Statistical calculations for DP-1VA	■
Data output	■
ZERO SET	■
PRESET	■
Group judgement	■
Workpiece position display	■
Transparent object measurement	■
Automatic measurement	■
Abnormal data elimination	■

Specifications

Linearity at 20°C *1	Entire range : ±0,5 µm Narrow range : ±(0,3+0,1ΔD) µm
Positional error *2	±0,5 µm
Measuring region	3 x 25 mm
Laser wavelength	650 nm, Visible
Scanning rate	1600 scans/s
Scanning speed	56m/s
Applicable laser standards	IEC
Main display	16-digit fluorescent tube
Interface units equipped	RS-232C, Analog I/O, Foot-switch
Repeatability (±2σ)	±0,045 µm
Power supply	100 - 240VAC, 40 VA, 50/60Hz

Optional accessories

No.	Description
02AGD440	Centre Support for LSM-501S / 503S / 6902H
02AGD450	Adjustable V-Block for LSM-501S / 503S / 6902H
02AGD180	Calibration Gauge Set, Ø 1 - 25 mm
02AGD270	Workstage for LSM-501S / 503S / 6902H
02AGD280	Adjustable Workstage for LSM-6902H

*1 At the centre of the measuring region
*2 Potential measurement error due to variation in workpiece position within the measuring region
ΔD = Difference in diameter between the mastergauge and workpiece

Refer to the LSM brochure

All products to be sold to commercial customers.
Product illustrations are without obligation. Product descriptions, in particular any and all technical specifications, are only binding when explicitly agreed upon.

Laser Scan Micrometer Measuring Unit

LSM-500S

High Accuracy Non-contact Measuring System
- Measuring range starting from ø5 µm.
- Provides ultra-high accuracy with a linearity of ±0,3 µm over the entire measuring range (5 µm up to 2 mm).
- Ultra-high repeatability of ±0,03 µm.
- High scanning rate of 3200 scans/s

LSM-500S

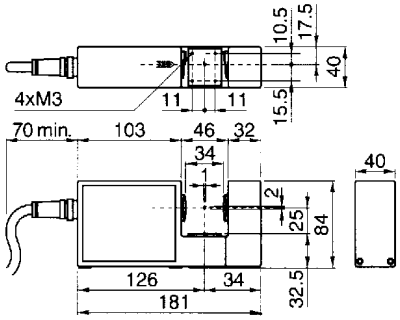

Specifications

Linearity at 20°C *1	±0,3 µm
Positional error *2	±0,4 µm
Measuring region	1 x 2 mm
Laser wavelength	650 nm, Visible
Scanning rate	3200 scans/s
Scanning speed	76m/s
Applicable laser standards	IEC, FDA
Repeatability (±2σ)	±0,03 µm

Optional accessories

No.	Description
02AGD110	Calibration Gauge Set, Ø 0,1 - 2 mm, LSM-500S
02AGD200	Wire guiding pulley, for LSM-500S
02AGD220	Air Shield LSM-500S
02AGN780A	Extension Signal Cable 5 m
02AGN780B	Extension Signal Cable 10 m
02AGN780C	Extension Signal Cable 15 m
02AGC150B	Extension Relay Cable 3 m
02AGN780D	Extension Signal Cable 20 m
02AGC150C	Extension Relay Cable 5 m
02AGC150A	Extension Relay Cable 1 m

Metric

No.	Range [mm]	Resolution (selectable)
544-532	0.005 - 2	0,00001-0,01 mm

LSM-501S

High Accuracy Non-contact measuring system
- Provides ultra-high accuracy with a linearity of ±0,5 µm over the entire measuring range (0,05 mm to 10 mm) and ±(0,3+0,1ΔD) µm in the narrow range.
- Ultra-High repeatability of ±0,04 µm.
- High scanning rate of 3200 scans/s

LSM-501S

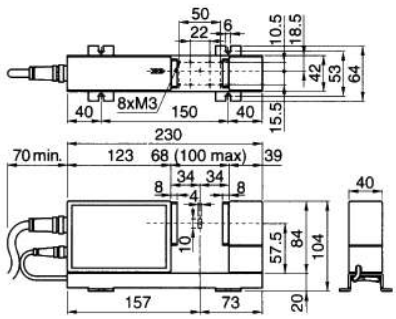

Specifications

Linearity at 20°C *1	Entire range : ± 0,5 µm Narrow range : ±(0,3+0,1ΔD) µm
Positional error *2	±0,5 µm
Measuring region	2 x 10 mm (ø0,05-0,1 mm) 4 x 10 mm (ø0,1-10 mm)
Laser wavelength	650 nm, Visible
Scanning rate	3200 scans/s
Scanning speed	113 m/s
Applicable laser standards	IEC, FDA
Repeatability (±2σ)	±0,04 µm

Optional accessories

No.	Description
02AGD120	Calibration Gauge Set, Ø 0,1 - 10mm
02AGD210	Wire guiding pulley, for LSM-501S
02AGD230	Air Shield LSM-501S
02AGD270	Workstage for LSM-501S / 503S / 6902H
02AGD400	Adjustable Workstage for LSM-501S
02AGN780A	Extension Signal Cable 5 m
02AGC150A	Extension Relay Cable 1 m
02AGN780B	Extension Signal Cable 10 m
02AGN780D	Extension Signal Cable 20 m
02AGN780C	Extension Signal Cable 15 m
02AGC150C	Extension Relay Cable 5 m
02AGD440	Centre Support for LSM-501S / 503S / 6902H
02AGD450	Adjustable V-Block for LSM-501S / 503S / 6902H
02AGC150B	Extension Relay Cable 3 m

02AGD440 and 02AGD450 : use with an adjustable workstage

*1 At the centre of the measuring region
*2 Potential measurement error due to variation in workpiece position within the measuring region
ΔD = Difference in diameter between the mastergauge and workpiece

Refer to the LSM brochure

All products to be sold to commercial customers.
Product illustrations are without obligation. Product descriptions, in particular any and all technical specifications, are only binding when explicitly agreed upon.

Laser Scan Micrometer Measuring Unit

LSM-503S

High Accuracy Non-contact measuring system
- General-purpose type with a measuring range of 0,3 mm to 30 mm.
- Provides high accuracy with a linearity of ±1 µm over the entire measuring range and ±(0,6+0,1ΔD) µm in the narrow range.
- Excellent repeatability of ±0,1 µm.
- High scanning rate of 3200 scans/s.

LSM-503S

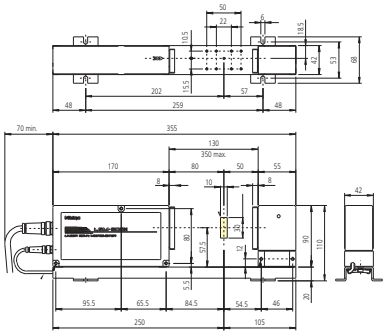

Metric

No.	Range [mm]	Resolution (selectable)
544-536	0.3 - 30	0,00002 - 0,1 mm

Specifications

Linearity at 20°C *1	Entire range : ±1 µm Narrow range : ±(0,6+0,1ΔD) µm
Positional error *2	±1,5 µm
Measuring region	10 x 30 mm
Laser wavelength	650 nm, Visible
Scanning rate	3200 scans/s
Scanning speed	226 m/s
Applicable laser standards	IEC, FDA
Repeatability (±2σ)	±0,11 µm

Optional accessories

No.	Description
02AGD130	Calibration Gauge Set, Ø 1 - 30 mm
02AGD240	Air Shield LSM-503S
02AGD270	Workstage for LSM-501S / 503S / 6902H
02AGN780A	Extension Signal Cable 5 m
02AGN780B	Extension Signal Cable 10 m
02AGD440	Centre Support for LSM-501S / 503S / 6902H
02AGD490	Adjustable Workstage for LSM-503S
02AGN780C	Extension Signal Cable 15 m
02AGD450	Adjustable V-Block for LSM-501S / 503S / 6902H
02AGN780D	Extension Signal Cable 20 m
02AGC150C	Extension Relay Cable 5 m
02AGC150B	Extension Relay Cable 3 m
02AGC150A	Extension Relay Cable 1 m

02AGD440 and 02AGD450 : use with an adjustable workstage

LSM-506S

High Accuracy Non-contact Measuring System
- General-purpose type with a measuring range of 1 mm to 60 mm.
- Provides high accuracy with a linearity of ±3 µm over the entire measuring range and ±(1,5+0,5ΔD) µm in the narrow range.
- Excellent repeatability of ±0,36 µm.
- High scanning rate of 3200 scans/s.

LSM-506S

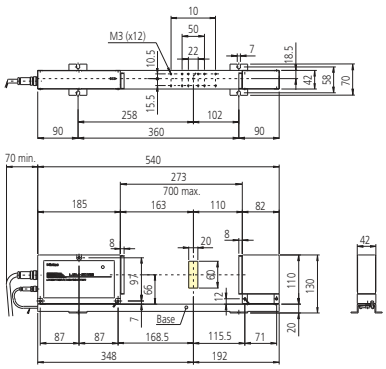

Metric

No.	Resolution (selectable)
544-538	0,00005-0,1 mm

Specifications

Linearity at 20°C *1	Entire Range : ±3 µm Narrow range : ±(1,5+0,5ΔD) µm
Positional error *2	±4 µm
Measuring region	20 x 60 mm
Laser wavelength	650 nm, Visible
Scanning rate	3200 scans/s
Scanning speed	452 m/s
Applicable laser standards	IEC, FDA
Repeatability (±2σ)	±0,36 µm

Optional accessories

No.	Description
02AGD140	Calibration Gauge Set, Ø 1 - 60 mm
02AGD520	Adjustable Workstage for LSM-506S
02AGD580	Centre Support for LSM-506S / 9506
02AGD590	Adjustable V-Block for LSM-506S / 9506
02AGD250	Air Shield LSM-506S
02AGN780A	Extension Signal Cable 5 m
02AGC150A	Extension Relay Cable 1 m
02AGC150B	Extension Relay Cable 3 m
02AGN780B	Extension Signal Cable 10 m
02AGN780C	Extension Signal Cable 15 m
02AGN780D	Extension Signal Cable 20 m
02AGC150C	Extension Relay Cable 5 m

02AGD580 and 02AGD590 : use with an adjustable workstage

*1 At the centre of the measuring region *2 Potential measurement error due to variation in workpiece position within the measuring region
ΔD = Difference in diameter between the mastergauge and workpiece

Refer to the LSM brochure

All products to be sold to commercial customers.
Product illustrations are without obligation. Product descriptions, in particular any and all technical specifications, are only binding when explicitly agreed upon.

Laser Scan Micrometer Measuring Unit

LSM-512S

High Accuracy Non-contact measuring system
- General-purpose type with a wide measuring range of 1 mm to 120 mm.
- Provides high accuracy with a linearity of ±6 µm over the entire measuring range and ±(4+0,5ΔD) µm in the narrow range.
- Excellent repeatability of ±0,8 µm.
- High scanning rate of 3200 scans/s

LSM-512S

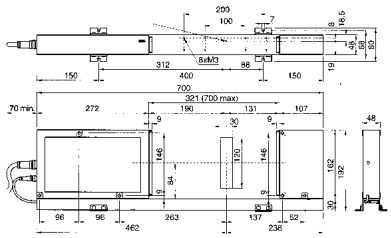

Specifications

Linearity at 20°C *1	Entire range : ±6 µm Narrow range : ±(4+0,5ΔD) µm
Positional error *2	±8 µm
Measuring region	30 x 120 mm
Laser wavelength	650 nm, Visible
Scanning rate	3200 scans/s
Scanning speed	904 m/s
Applicable laser standards	IEC, FDA
Repeatability (±2σ)	±0,8 µm

Optional accessories

No.	Description
02AGD150	Calibration Gauge Set, Ø 20 - 120 mm
02AGD260	Air Shield LSM-512S
02AGN780A	Extension Signal Cable 5 m
02AGN780D	Extension Signal Cable 20 m
02AGN780B	Extension Signal Cable 10 m
02AGN780C	Extension Signal Cable 15 m
02AGC150A	Extension Relay Cable 1 m
02AGC150C	Extension Relay Cable 5 m
02AGC150B	Extension Relay Cable 3 m

Metric

No.	Range [mm]	Resolution (selectable)
544-540	1 - 120	0,0001 - 0,1 mm

LSM-516S

High Accuracy Non-contact measuring system
- General-purpose type with a wide measureming range of 1 mm to 160 mm.
- Provides high accuracy with a linearity of ±7 µm over the entire measuring range and ±(4+2ΔD) µm in the narrow range.
- Excellent repeatability of ±1,4 µm.
- High scanning rate of 3200 scans/s

LSM-516S

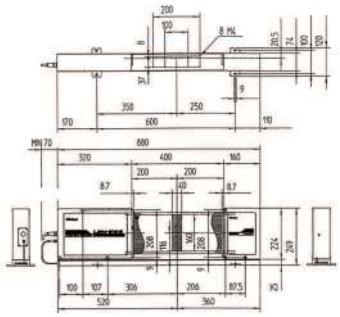

Specifications

Linearity at 20°C *1	Entire range : ±7 µm Narrow range : ±(4+2ΔD) µm
Positional error *2	±8 µm
Measuring region	40 x 160 mm
Laser wavelength	650 nm, Visible
Scanning rate	3200 scans/s
Scanning speed	1206 m/s
Applicable laser standards	IEC, FDA
Repeatability (±2σ)	±1,4 µm

Optional accessories

No.	Description
02AGM300	Calibration Gauge Set, Ø 20 - 160 mm
02AGN780A	Extension Signal Cable 5 m
02AGN780B	Extension Signal Cable 10 m
02AGC150A	Extension Relay Cable 1 m
02AGN780C	Extension Signal Cable 15 m
02AGN780D	Extension Signal Cable 20 m
02AGC150B	Extension Relay Cable 3 m
02AGC150C	Extension Relay Cable 5 m

*1 At the centre of the measuring region
*2 Potential measurement error due to variation in workpiece position within the measuring region
ΔD = Difference in diameter between the mastergauge and workpiece

Metric

No.	Range [mm]	Resolution (selectable)
544-542	1 - 160	0,0001-0,1 mm

Refer to the LSM brochure

All products to be sold to commercial customers.
Product illustrations are without obligation. Product descriptions, in particular any and all technical specifications, are only binding when explicitly agreed upon.

Laser Scan Micrometer

The LSM-9506 is a bench-top, non-contact measuring system that uses a high speed scanning laser beam to accurately measure workpieces. It is ideal for measuring items that are difficult or impossible to measure with conventional instruments, such as elastic parts or soft parts that might deform under pressure.
The LSM-9506 offers you the following benefits:

- Its measurement system has an integrated display, allowing easy bench-top inspection.
- A statistical calculation function is also provided.
- Includes standard RS-232C serial port and data output interface.

LSM-9506

Metric

No.	Range [mm]	Resolution (selectable)
544-115D	0.5 - 60	0,00005-0,1 mm

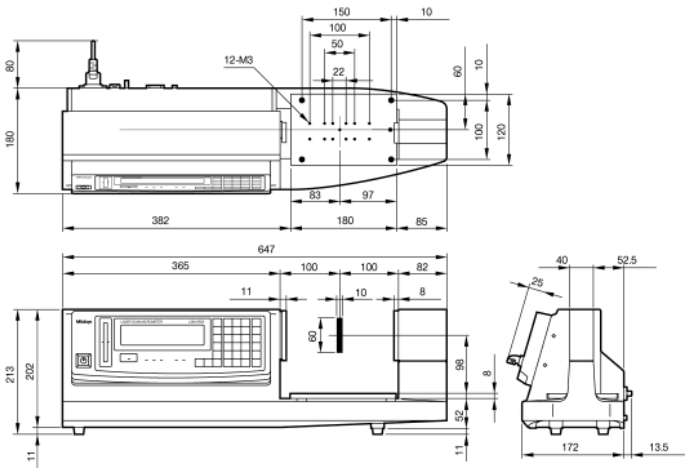

Functions	
GO/±NG judgement	●
OFFSET	●
Sample Measurement	●
Statistical calculations for DP-1VA	●
Data output	●
ZERO SET	●
PRESET	●
Group judgement	●
Workpiece position display	●
Transparent object measurement	●
Automatic measurement	●
Abnormal data elimination	●

Specifications

Linearity at 20°C *1	±2,5 µm
Positional error *2	±2,5 µm
Measuring region	10 x 60 mm
Laser wavelength	650 nm, Visible
Scanning rate	1600 scans/s
Scanning speed	226 m/s
Applicable laser standards	IEC
Main display	16-digit fluorescent tube
Interface units equipped	RS-232C, Digimatic, Foot Switch
Repeatability (±2σ)	±0,6 µm
Power supply	100-240VAC, 40VA, 50/60Hz

Optional accessories

No.	Description
02AGD140	Calibration Gauge Set, Ø 1 - 60 mm
02AGD680	Adjustable Workstage for LSM-9506
937179T	Footswitch for SPC
02AGD580	Centre Support for LSM-506S / 9506
02AGD590	Adjustable V-Block for LSM-506S / 9506
936937	Digimatic Cable, Flat 10-Pin Type, 1m

Refer to the LSM brochure

*1 At the centre of the measuring region
*2 Potential measurement error due to variation in workpiece position within the measuring region

All products to be sold to commercial customers.
Product illustrations are without obligation. Product descriptions, in particular any and all technical specifications, are only binding when explicitly agreed upon.

Laser Scan Micrometer Display Unit

Functions	
ABS / INC (INC ZERO)	●
GO/±NG judgement	●
OFFSET	●
Sample Measurement	●
Statistical calculations for DP-1VA	●
Data output	●
PRESET	●
Workpiece position display	●
Transparent object measurement	●
Automatic measurement	●
Abnormal data elimination	●

Specifications

Main display	9-digit LED
Interface units equipped	USB2, RS-232C, Analog I/O, Foot Switch
Power supply	+24VDC ±10%, 1A

The LSM-5200 Display Unit is a versatile display unit dedicated to Laser Scan Micrometers.
This dual-display design allows setup values to be continuously monitored with.
You can also get simultaneous readout of two measurement values, and segment measurement and edge measurement are both supported. Statistical calculation and abnormal-data elimination functions are provided as well.
The LSM-5200 Display Unit offers you the following benefits:

- Panel-mount type (with dimensions conforming to DIN 43700) making system integration easy.
- Capable of calculating mean, maximum, and range (maximum to minimum).
- You can select either segment measurement (7 segments max) or edge measurement (1 to 255 edges).
- USB, RS-232C, I/O and analogue interfaces are provided as standard.
- The arithmetical average or moving average can also be selected.
- GO/±NG judgement function.

LSM-5200 display unit

No.
544-047

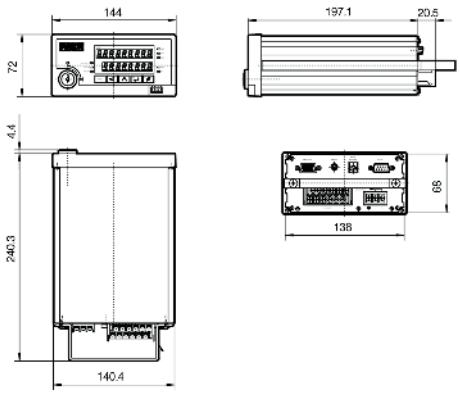

All products to be sold to commercial customers.
Product illustrations are without obligation. Product descriptions, in particular any and all technical specifications, are only binding when explicitly agreed upon.

Mitutoyo

Laser Scan Micrometer Display Unit

The LSM-6200 Display Unit is a versatile display unit dedicated to Laser Scan Micrometers. This dual-display design allows setup values to be continuously monitored with. You can also get simultaneous readout of two measurement values, and segment measurement and edge measurement are both supported. Statistical calculation and abnormal-data elimination functions are provided as well.

The LSM-5200 Display Unit offers you the following benefits:

- With this dual-display design, you can continuously monitor setup values, and also simultaneously display two measurement values.
- You can select either the segment measurement (7 segments max) or edge measurement (1 to 255 edges).
- Includes RS-232C and I/O and analogue interface capabilities.
- Includes statistical calculation and abnormal data eliminating functions.

LSM-6200 display unit

Metric

No.
544-071D

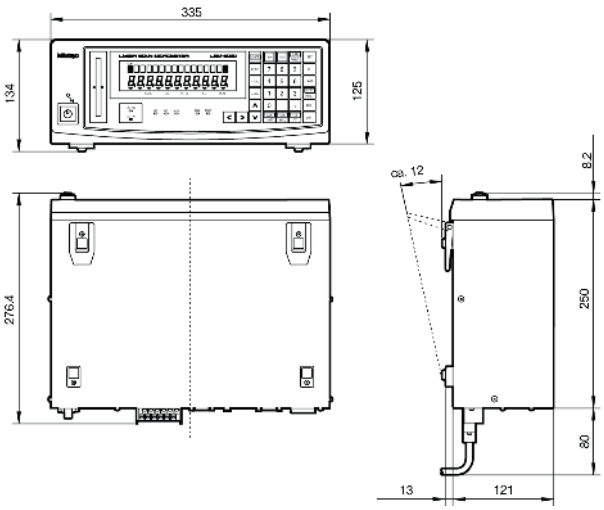

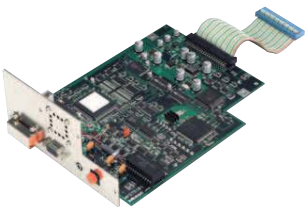

02AGP150 - Dual-type add-on unit

Functions	
GO/±NG judgement	■
OFFSET	■
Sample Measurement	■
Statistical calculations for DP-1VA	■
Data output	■
ZERO SET	■
PRESET	■
Group judgement	■
Workpiece position display	■
Transparent object measurement	■
Automatic measurement	■
Abnormal data elimination	■

Specifications

Applicable laser standards	IEC, FDA (544-534), JIS (544-533)
Main display	16-digit fluorescent tube
Interface units equipped	RS-232C, Analog I/O, Foot Switch
Power supply	100-240V AC, 40 VA, 50/60Hz

Optional accessories

No.	Description
02AGC840	Digimatic (SPC) Code Out Unit, LSM-6200 / 6900
02AGC880	2nd I/O & ANALOG Interface, LSM-6200 / 6900
02AGC910	BCD Interface Unit, LSM-6200 / 6900
02AGP150	Dual Type Add-on Unit for LSM-6200
02AGD600C	Printer for LSM-5000 / 6000

Refer to the LSM brochure

All products to be sold to commercial customers.
Product illustrations are without obligation. Product descriptions, in particular any and all technical specifications, are only binding when explicitly agreed upon.

Laser Scan Micrometer Optional Accessories

Refer to the LSM brochure

Accessories

	No.	Application	Description
	02AGD110	LSM-500S	Calibration gauge set (ø0,1-2 mm)
	02AGD120	LSM-501S	Calibration gauge set (ø0,1-10 mm)
	02AGD130	LSM-503S	Calibration gauge set (ø1-30 mm)
	02AGD140	LSM-506S	Calibration gauge set (ø1-60 mm)
	02AGD150	LSM-512S	Calibration gauge set (ø20-120 mm)
	02AGD170	LSM-9506	Calibration gauge set (ø1-60 mm)
	02AGD180	LSM-902	Calibration gauge set (ø1-25 mm)
	02AGM300	LSM-516S	Calibration gage set (ø 20-160 mm)
	02AGD200	LSM -500S	Wire guiding pulley
	02AGD210	LSM-501S	Wire guiding pulley
	02AGD220	LSM-500S	Air shield
	02AGD230	LSM-501S	Air shield
	02AGD240	LSM-503S	Air shield
	02AGD250	LSM-506S	Air shield
	02AGD260	LSM-512S	Air shield
	02AGD270	LSM 501/503/90	Workstage
	02AGD400	LSM 501	Adjustable Workstage
	02AGD490	LSM 503	Adjustable Workstage
	02AGD520	LSM-506S	Adjustable Workstage
	02AGD280	LSM-6902H	Adjustable Workstage
	02AGD370	LSM-9506	Adjustable Workstage
	02AGD680	LSM-501S/503S/6902H	Adjustable Workstage
	02AGD440	LSM-501S/503S/902	Centre Support
	02AGD580	LSM-506S/9506	Centre Support
	02AGD550	LSM 506	V-Block
	02AGD560	LSM 506	V-Block
	02AGD570	LSM 506	V-Block
	02AGD450	LSM-501S / 503S / 6902H	Adjustable V-Block
	02AGD590	LSM-506S / 9506	Adjustable V-Block

All products to be sold to commercial customers.
Product illustrations are without obligation. Product descriptions, in particular any and all technical specifications, are only binding when explicitly agreed upon.

Mitutoyo

Laser Scan Micrometer Optional Accessories

Accessories

Refer to the LSM brochure

	No.	Application	Description
Digimatic (SPC) code-out unit	02AGC840	LSM-6200/6900	Digimatic (SPC) code-out unit
	02AGC880	LSM-6200/6900	2nd I/O & analog interface
	02AGC910	LSM-6200/6900	BCD interface unit
	02AGC150A	All LSM models [1]	
	02AGC150B	All LSM models [1]	
	02AGC150C	All LSM models [1]	
Dual-type add-on unit 	02AGP150	LSM-6200	Dual-type add-on unit
Extension relay cable	02AGC330A	All LSM models [1]	Output signal cable 5 m
	02AGC330B	All LSM models [1]	Output signal cable 10 m
Extension signal cable	02AGN780A	All LSM models [2]	
	02AGN780B	All LSM models [2]	
	02AGN780C	All LSM models [2]	
	02AGN780D	All LSM models [2]	
	02AGN780E	All LSM models [2]	Extension signal cable 30 m

[1] Except for LSM-500S/902
[2] Except for LSM-902

All products to be sold to commercial customers.
Product illustrations are without obligation. Product descriptions, in particular any and all technical specifications, are only binding when explicitly agreed upon.

Digital Scale and DRO Systems

DRO Linear Scales and Counters
Page 394

NC Linear Scales
Page 405

Scale Units
Page 413

All products to be sold to commercial customers.
Product illustrations are without obligation. Product descriptions, in particular any and all technical specifications, are only binding when explicitly agreed upon.

DRO Linear Scales Selection Guide

AT715
Absolute Type

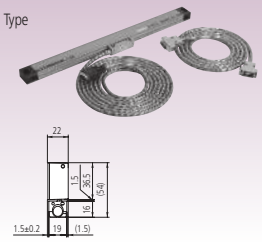

AT103
Standard-size Type

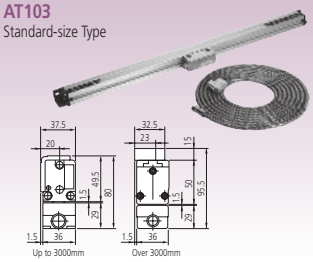

AT113
Slim Type

AT116
Economy and Slim Type

Specifications

Model	AT715	AT103	AT113, AT116
Measurement method	Electromagnetic induction system	Photoelectric (transparent linear encoder)	
Light source	—	LED	
Receptor	—	Phototransistor	
Output wave form	—	2-phase sine curves with a phase difference of 90°	
Effective length (for high accuracy type)	100 - 3000mm	100 - 6000mm (100 - 2000mm)	100 - 1500mm (100 - 1500mm)
Accuracy* [high accuracy type] * Excluding quantizing error of ±1 count	±5μm (Effective length: 100 - 500mm) ±7μm (Effective length: 600 - 1800mm) ±10μm (Effective length: 2000 - 3000mm)	(5+5L_0/1000)μm*1 [(3+3L_0/1000)μm]	(5+5L_0/1000)μm [(3+3L_0/1000)μm*2]
Maximum response speed	50m/min.	120m/min.*3	120m/min. (50m/min.: AT116)
Scale reference point	Incremental system	At every 50mm interval	
Linear expansion coefficient	—	(8±1)x10^{-6}/°C	
Power supply	5V±5% DC	5V±5% DC	
Max, current consumption	70mA	70mA*4 (60mA: AT113, AT116)	
Operating temperature	0°C to 45°C		
Storage temperature	-20°C to 70°C		
Relative humidity	20 - 80%RH		
Head Cable length	—	—	*6
Sliding force	5N or less	5N or less	
Single cable*5	Standard accessory (refer to individual specifications for the length)		
Dust/water protection level	IP67	IP53	

*1: (5+8L_0/1000)μm for models over 3250mm effective length *2: not available for AT116 *3: 50m/min. for models over 3250mm effective length *4: 140mA for models over 3250mm effective length
*5: Vinyl-coated type single cable and extension cable are available on request. *6: AT103:0.3m AT116: Without head cable

All products to be sold to commercial customers.
Product illustrations are without obligation. Product descriptions, in particular any and all technical specifications, are only binding when explicitly agreed upon.

DRO Linear Scales AT103

Sealed incremental - full size housing

These linear scales offer : Sturdy construction-high resistance to vibration-protection rating are similar in upright and reclining position

- The innovative rubber lips keep out contaminants when you are using the scale in a machine shop.
- An armoured signal cable is used to connect the scale unit to the DRO counter, so you can operate it safely even in hostile environments.
- The signal cable outlet can be positioned on either side of the slider so you can connect the signal cable from either direction.

539-133

Specifications

Accuracy	(5+5L/1000) µm L = Effective range (mm)
Output waveform	Two 90° phase-shifted sinusoidal signals (2Vpp)
Operation temperature	0°C to 45°C
Power supply	5V DC ± 10%
Cross section	80 x 37,5mm / 95,5 x 37,5mm
Max. drive speed	120 m/min.
Signal period	20 µm
Scale reference points	every 50 mm
Dust/water protection level	IP53

Optional accessories

No.	Description
09AAA033A	Extension Cable 2M
09AAA033B	Extension Cable 5M
09AAA033C	Extension Cable 7M
174-183D	Linear Scale Counter KA-212
174-185D	Linear Scale Counter KA-213

Extension cable

Legend
L0 Effective range
L1 Travel range
L2 Bore centre distance
L3 Total length
L4-L6 Support bracket position

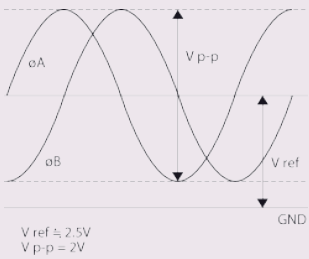

Output waveform

No.	Cable length [m]	Effective range	L1 [mm]	L2 [mm]	L3 [mm]	L4 [mm]	L5 [mm]	L6 [mm]	Mass [kg]
539-111-30	3	100 mm	120	248	268				1.5
539-112-30	3	150 mm	170	298	318				1.6
539-113-30	3	200 mm	220	348	368				1.7
539-114-30	3	250 mm	270	398	418				1.8
539-115-30	3	300 mm	330	458	478				1.9
539-116-30	3	350 mm	380	508	528				2.0
539-117-30	3	400 mm	430	558	578				2.1
539-118-30	3	450 mm	480	608	628				2.2
539-119-30	3	500 mm	540	668	688				2.3
539-121-30	3	600 mm	650	778	798				2.6
539-123-30	3	700 mm	760	888	908				2.8
539-124-30	3	750 mm	810	938	958				2.9
539-125-30	3	800 mm	860	988	1008				3.0
539-126-30	3	900 mm	960	1088	1108				3.3
539-127-30	5	1000 mm	1060	1188	1208	594			3.7
539-128-30	5	1100 mm	1160	1288	1308	644			4.0
539-129-30	5	1200 mm	1260	1388	1408	694			4.2
539-130-30	5	1300 mm	1360	1488	1508	744			4.4
539-131-30	5	1400 mm	1460	1588	1608	794			4.6
539-132-30	5	1500 mm	1560	1688	1708	844			4.8
539-133-30	5	1600 mm	1690	1818	1838		610		5.1
539-134-30	5	1700 mm	1790	1918	1938		650		5.3
539-135-30	5	1800 mm	1890	2018	2038		670		5.5
539-136-30	5	2000 mm	2100	2228	2248		740		6.0
539-137-30	5	2200 mm	2300	2428	2448		800		6.4
539-138-30	7	2400 mm	2500	2628	2648	1314	1300	650	7.1
539-139-30	7	2500 mm	2600	2728	2748	1364	1340	670	7.3
539-140-30	7	2600 mm	2700	2828	2848	1414	1400	700	7.5
539-141-30	7	2800 mm	2900	3028	3048	1514	1500	750	7.9
539-142-30	7	3000 mm	3100	3228	3248	1614	1600	800	8.3

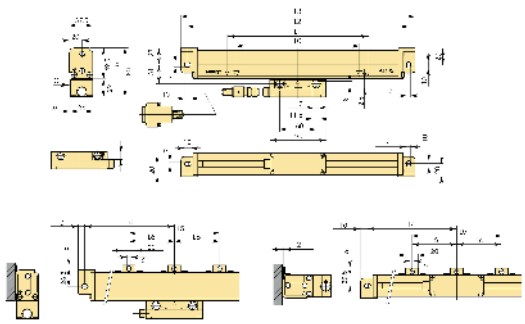

All products to be sold to commercial customers.
Product illustrations are without obligation. Product descriptions, in particular any and all technical specifications, are only binding when explicitly agreed upon.

DRO Linear Scales AT103

Sealed incremental - full size housing -larger measuring lenght

These linear scales offer : Sturdy construction-high resistance to vibration-protection rating are similar in upright and reclining position

- The innovative rubber lips keep out contaminants when you are using the scale in a machine shop.
- An armoured signal cable is used to connect the scale unit to the DRO counter, so you can operate it safely even in harsh environments.
- The signal cable outlet can be positioned on either side of the slider, so you can connect the signal cable from either direction.

539-133

No.	Cable length [m]	Effective range	L^1 [mm]	L^3 [mm]	L^4 [mm]	L^5 [mm]	L^6 [mm]	Mass [kg]
539-143-30	10	3250 mm	3350	3470	135	3200	800	10.8
539-144-30	10	3500 mm	3600	3720	160	3400	850	11.4
539-145-30	10	3750 mm	3850	3970	125	3720	930	12.0
539-146-30	10	4000 mm	4100	4220	110	4000	1000	12.6
539-147-30	10	4250 mm	4350	4470	135	4200	1050	13.2
539-148-30	10	4500 mm	4600	4720	160	4400	1100	13.8
539-149-30	15	4750 mm	4850	4970	85	4800	800	15.2
539-150-30	15	5000 mm	5100	5220	120	4980	830	15.8
539-151-30	15	5250 mm	5350	5470	125	5220	870	16.4
539-152-30	15	5500 mm	5600	5720	130	5460	910	17.0
539-153-30	15	5750 mm	5850	5970	135	5700	950	17.6
539-154-30	15	6000 mm	6100	6220	110	6000	1000	18.2

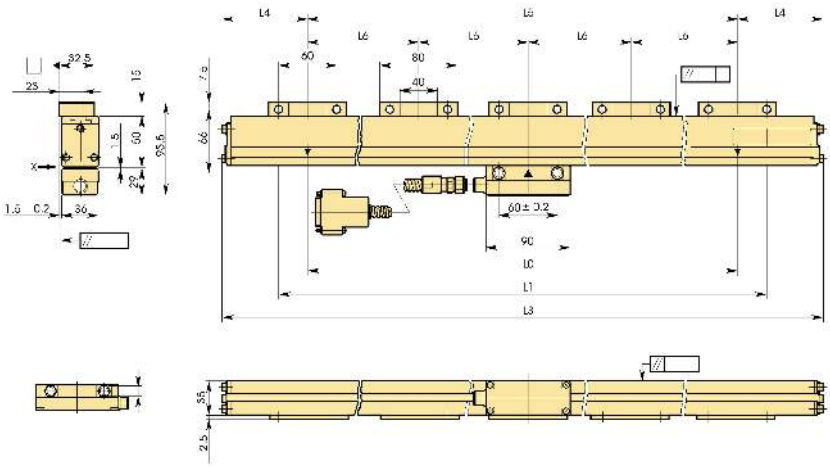

Specifications

Accuracy	(5+8L/1000) µm L = Effective range (mm)
Output waveform	Two 90° phased-shifted sinusoidal signals (2Vpp)
Operation temperature	0°C to 45°C
Power supply	5V DC ± 10%
Cross section	80 x 37,5mm / 95,5 x 37,5mm
Max. drive speed	50 m/min.
Signal period	20 µm
Scale reference points	every 50 mm
Dust/water protection level	IP53

Optional accessories

No.	Description
09AAA033A	Extension Cable 2M
09AAA033B	Extension Cable 5M
09AAA033C	Extension Cable 7M
174-183D	Linear Scale Counter KA-212
174-185D	Linear Scale Counter KA-213

Extension cable

Legend
L0 Effective range
L1 Travel range
L2 Bore centre distance
L3 Total length
L4-L6 Support bracket position

Please refer to the DRO leaflet for more details.

All products to be sold to commercial customers.
Product illustrations are without obligation. Product descriptions, in particular any and all technical specifications, are only binding when explicitly agreed upon.

DRO Linear Scales AT103 - High Accuracy

Sealed incremental - full size housing- with very high repeatability

These linear scales offer : Sturdy construction-high resistance to vibration-protection rating are similar in upright and reclining position

- The innovative rubber lips keep out contaminants when you are using the scale in a machine shop.
- An armoured signal cable is used to connect the scale unit to the DRO counter, so you can operate it safely even in harsh environments.
- The signal cable outlet can be positioned on either side of the slider so you can connect the signal cable from either direction.

Specifications

Accuracy	(3+3L/1000) µm L = Effective range (mm)
Output waveform	Two 90° phase-shifted sinusoidal signals (2Vpp)
Operation temperature	0°C to 45°C
Power supply	5V DC ± 10%
Cross section	80 x 37,5mm / 95,5 x 37,5mm
Max. drive speed	up to 120 m/min.
Signal period	20 µm
Scale reference points	every 50 mm
Dust/water protection level	IP53

Optional accessories

No.	Description
09AAA033A	Extension Cable 2M
09AAA033B	Extension Cable 5M
09AAA033C	Extension Cable 7M
174-183D	Linear Scale Counter KA-212
174-185D	Linear Scale Counter KA-213

Extension cable

539-133

No.	Cable length [m]	Effective range	L^1 [mm]	L^2 [mm]	L^3 [mm]	L^4 [mm]	L^5 [mm]	Mass [kg]
539-111-40	3	100 mm	120	248	268			1.5
539-112-40	3	150 mm	170	298	318			1.6
539-113-40	3	200 mm	220	348	368			1.7
539-114-40	3	250 mm	270	398	418			1.8
539-115-40	3	300 mm	330	458	478			1.9
539-116-40	3	350 mm	380	508	528			2.0
539-117-40	3	400 mm	430	558	578			2.1
539-118-40	3	450 mm	480	608	628			2.2
539-119-40	3	500 mm	540	668	688			2.3
539-121-40	3	600 mm	650	778	798			2.6
539-123-40	3	700 mm	760	888	908			2.8
539-124-40	3	750 mm	810	938	958			2.9
539-125-40	3	800 mm	860	988	1008			3.0
539-126-40	3	900 mm	960	1088	1108			3.3
539-127-40	5	1000 mm	1060	1188	1208	594		3.7
539-128-40	5	1100 mm	1160	1288	1308	644		4.0
539-129-40	5	1200 mm	1260	1388	1408	694		4.2
539-130-40	5	1300 mm	1360	1488	1508	744		4.4
539-131-40	5	1400 mm	1460	1588	1608	794		4.6
539-132-40	5	1500 mm	1560	1688	1708	844		4.8
539-133-40	5	1600 mm	1690	1818	1838		610	5.1
539-134-40	5	1700 mm	1790	1918	1938		650	5.3
539-135-40	5	1800 mm	1890	2018	2038		670	5.5
539-136-40	5	2000 mm	2100	2228	2248		740	6.0

Legend
L0 Effective range
L1 Travel range
L2-L3 Mount interval
L4 Overall length
L5-L6 Support bracket position

Refer to the DRO System leaflet for more details.

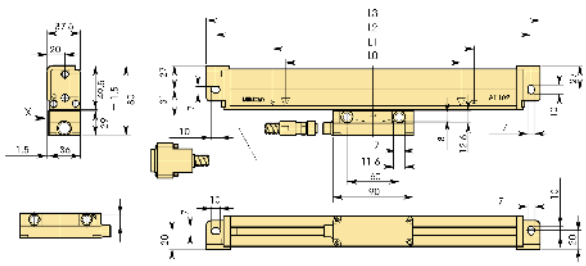

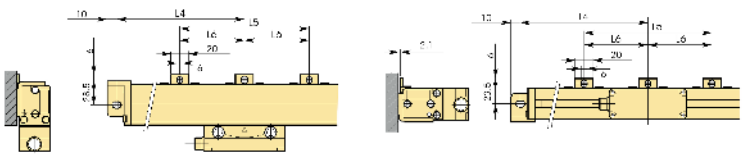

All products to be sold to commercial customers.
Product illustrations are without obligation. Product descriptions, in particular any and all technical specifications, are only binding when explicitly agreed upon.

DRO Linear Scales AT113

Sealed incremental - slimline scale housing

These linear scales are built for limited installation space

- Glass scale - Zero not coded
- Expansion factor (8 ± 1)x $10^{-6}/K^{-1}$
- An armoured inox signal cable is used to connect the DRO counter

539-201-30

No.	Cable length [m]	Effective range	L^1 [mm]	L^2 [mm]	L^3 [mm]	L^4 [mm]	L^5 [mm]	L^6 [mm]	L^7 [mm]	Mass [kg]
539-201-30	3,5	100 mm	120	258	242	276				0.9
539-202-30	3,5	150 mm	170	308	292	326				0.905
539-203-30	3,5	200 mm	220	358	342	376				0.943
539-204-30	3,5	250 mm	270	408	392	426				0.981
539-205-30	3,5	300 mm	330	468	452	486				1.027
539-206-30	3,5	350 mm	380	518	502	536				1.064
539-207-30	3,5	400 mm	430	568	552	586				1.102
539-208-30	3,5	450 mm	480	618	602	636				1.14
539-209-30	3,5	500 mm	540	678	662	696	339	331		1.86
539-211-30	3,5	600 mm	640	778	762	796	389	381		1.3
539-213-30	3,5	700 mm	740	878	862	896	439	431		1.3
539-215-30	3,5	800 mm	840	978	962	996	489	481		1.4
539-216-30	3,5	900 mm	940	1078	1062	1096	539	531		1.4
539-217-30	5	1000 mm	1040	1178	1162	1196	589	581		1.9
539-218-30	5	1100 mm	1140	1278	1262	1296			430	1.9
539-219-30	5	1200 mm	1240	1378	1362	1396			460	2.0
539-220-30	5	1300 mm	1340	1478	1462	1496			490	2.2
539-221-30	5	1400 mm	1440	1578	1562	1596			530	2.2
539-222-30	5	1500 mm	1540	1678	1662	1696			560	2.2

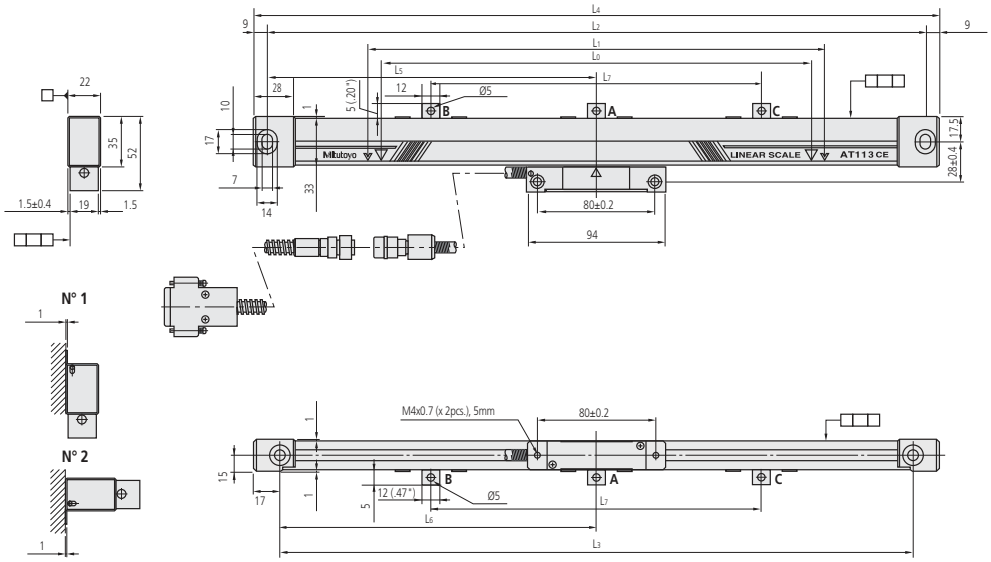

N°1-N°2 Mounting method

Specifications

Accuracy	(5+5L/1000) µm L = Effective range (mm)
Output waveform	Two 90° phase-shifted sinusoidal signals (2Vpp)
Operation temperature	0°C to 45°C
Power supply	5V DC ± 10%
Cross section	52 x 22mm
Max. drive speed	120 m/min
Signal period	20 µm
Scale reference points	every 50 mm
Dust/water protection level	IP53

Optional accessories

No.	Description
09AAA033A	Extension Cable 2M
09AAA033B	Extension Cable 5M
09AAA033C	Extension Cable 7M
174-183D	Linear Scale Counter KA-212
174-185D	Linear Scale Counter KA-213

Legend
L0 Effective range
L1 Travel range
L2-L3 Mount interval
L4 Overall length
L5-L7 Support bracket position

Refer to the DRO System leaflet for more details.

All products to be sold to commercial customers.
Product illustrations are without obligation. Product descriptions, in particular any and all technical specifications, are only binding when explicitly agreed upon.

DRO Linear Scales AT113 - High Accuracy

Sealed incremental - slimline housing - with very high repeatability

These linear scales are built for limited installation space

- Glass scale - Zero not coded
- Expansion factor (8 ± 1)x $10^{-6}/K^{-1}$
- An armoured inox signal cable is used to connect the DRO counter

Specifications

Accuracy	(3+3L/1000) µm L = Effective range (mm)
Operation temperature	0°C to 45°C
Power supply	5V DC ± 10%
Cross section	52 x 22mm
Max. drive speed	120 m/min
Signal period	20 µm
Scale reference points	every 50 mm
Dust/water protection level	IP53

Optional accessories

No.	Description
09AAA033A	Extension Cable 2M
09AAA033B	Extension Cable 5M
09AAA033C	Extension Cable 7M
174-183D	Linear Scale Counter KA-212
174-185D	Linear Scale Counter KA-213

539-201-40

No.	Cable length [m]	Effective range	L^1 [mm]	L^2 [mm]	L^3 [mm]	L^4 [mm]	L^5 [mm]	L^6 [mm]	L^7 [mm]	Mass [kg]
539-201-40	3,5	100 mm	120	258	242	276				0.9
539-202-40	3,5	150 mm	170	308	292	326				0.905
539-203-40	3,5	200 mm	220	358	342	376				0.943
539-204-40	3,5	250 mm	270	408	392	426				0.981
539-205-40	3,5	300 mm	330	468	452	486				1.027
539-206-40	3,5	350mm	380	518	502	536				1.064
539-207-40	3,5	400 mm	430	568	552	586				1.102
539-208-40	3,5	450 mm	480	618	602	636				1.14
539-209-40	3,5	500 mm	540	678	662	696	339	331		1.86
539-211-40	3,5	600 mm	640	778	762	796	389	381		1.3
539-213-40	3,5	700 mm	740	878	862	896	439	431		1.3
539-214-40	3,5	750 mm	780	918	902	936	459	451		1.4
539-216-40	3,5	900 mm	940	1078	1062	1096	539	531		1.4
539-217-40	5	1000 mm	1040	1178	1162	1196	589	581		1.9
539-218-40	5	1100 mm	1140	1278	1262	1296			430	1.9
539-219-40	5	1200 mm	1240	1378	1362	1396			460	2.0
539-220-40	5	1300 mm	1340	1478	1462	1496			530	2.2
539-221-40	5	1400 mm	1440	1578	1562	1596			530	2.2
539-222-40	5	1500 mm	1540	1678	1662	1696			560	2.2

Legend
L0 Effective range
L1 Travel range
L2-L3 Mount interval
L4 Overall length
L5-L7 Support bracket position

Refer to the DRO System leaflet for more details.

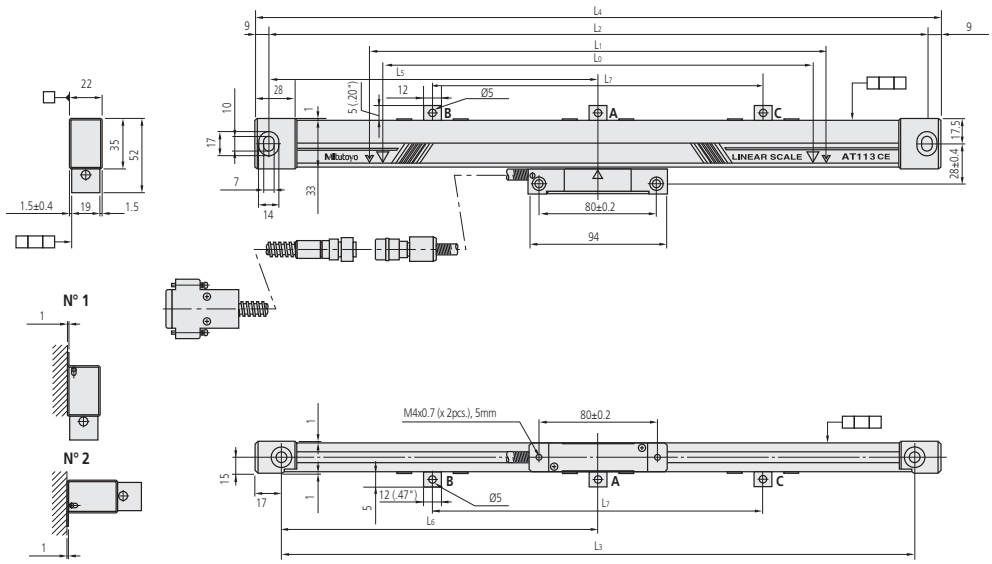

N°1-N°2 Mounting method

All products to be sold to commercial customers.
Product illustrations are without obligation. Product descriptions, in particular any and all technical specifications, are only binding when explicitly agreed upon.

Mitutoyo

DRO Linear Scales AT116

Sealed incremental - slimline housing - price aggressive

- Suitable for milling machines, XY tables, jigs, etc.
- Glass scale - Zero not coded
- Expansion factor (8 ± 1)x $10^{-6}/K^{-1}$
- An armoured inox signal cable is used to connect the DRO counter

539-271-30

No.	Cable length [m]	Effective range	L^1 [mm]	L^2 [mm]	L^3 [mm]	L^4 [mm]	L^5 [mm]	L^6 [mm]	L^7 [mm]	Mass [g]
539-271-30R	3,4	100 mm	120	258	242	276				550
539-272-30R	3,4	150 mm	170	308	292		326			600
539-273-30R	3,4	200 mm	220	358	342	376				700
539-274-30R	3,4	250 mm	270	408	392	426				800
539-275-30R	3,4	300 mm	330	468	452	486				900
539-276-30R	3,4	350 mm	380	518	502	536				1000
539-277-30R	3,4	400 mm	430	568	552	586				1050
539-278-30R	3,4	450 mm	480	618	602	636				1150
539-279-30R	3,4	500 mm	540	678	662	696	339	331		1250
539-281-30R	3,4	600 mm	640	778	762	796	389	381		1450
539-283-30R	3,4	700 mm	740	878	862	896	439	431		1600
539-284-30R	3,4	750 mm	780	918	902	936	459	451		1700
539-285-30R	3,4	800 mm	840	978	962	996	489	481		1800
539-286-30R	3,4	900 mm	940	1078	1062	1096	539	531		1950
539-287-30R	4,9	1000 mm	1040	1178	1162	1196	589	581		2350
539-288-30R	4,9	1100 mm	1140	1278	1262	1296			430	2500
539-289-30R	4,9	1200 mm	1240	1378	1362	1396			460	2700
539-290-30R	4,9	1300 mm	1340	1478	1462	1496			490	2850
539-291-30R	4,9	1400 mm	1440	1578	1562	1596			530	3050
539-292-30R	4,9	1500 mm	1540	1678	1662	1696			560	3250

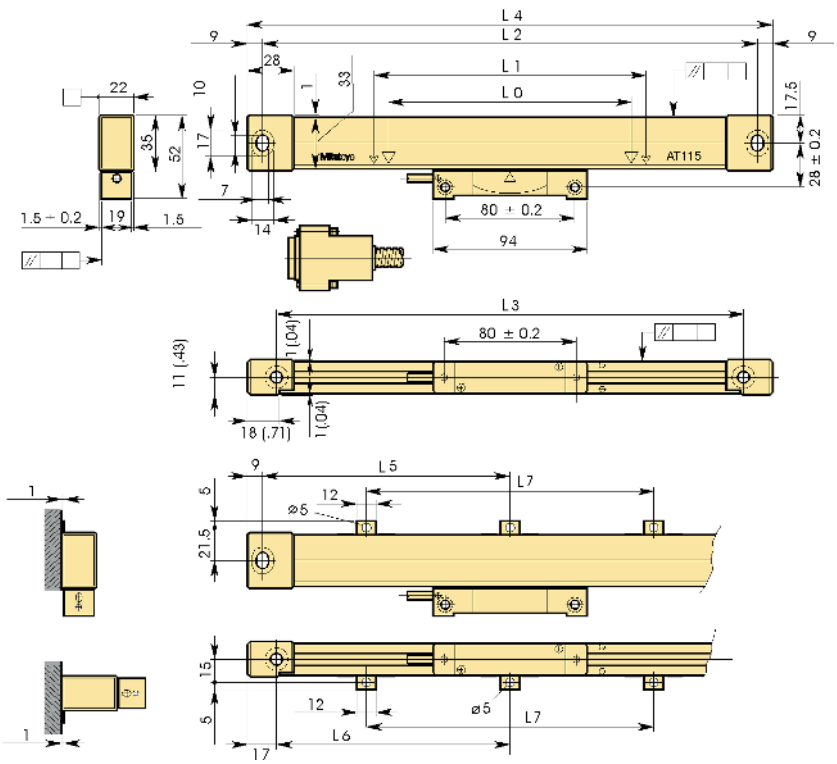

Specifications

Accuracy	(5+5L/1000) µm L = Effective range (mm)
Output waveform	Two 90° phase-shifted sinusoidal signals (2Vpp)
Operation temperature	0°C to 45°C
Power supply	5V DC ± 10%
Cross section	52 x 22mm
Max. drive speed	up to 50 m/min
Signal period	20 µm
Scale reference points	every 50 mm
Dust/water protection level	IP53

Optional accessories

No.	Description
09AAA720A	2M Cable for AT115, Conduit Armed
09AAA720B	5M Cable for AT115, Conduit Armed
09AAA720C	7M Cable for AT115, Conduit Armed
174-183D	Linear Scale Counter KA-212
174-185D	Linear Scale Counter KA-213

Extension cable

Legend
L0 Effective range
L1 Travel range
L2-L3 Mount interval
L4 Overall length
L5-L7 Support bracket position

Refer to the DRO System leaflet for more details.

All products to be sold to commercial customers.
Product illustrations are without obligation. Product descriptions, in particular any and all technical specifications, are only binding when explicitly agreed upon.

DRO ABS Linear Scales AT715

Sealed Absolute - IP 67 protection - medium scale housing - specific for new and old manual machine

This linear scale is based on electro magnetic induction principle thus offering you high enviroment protection IP level, in the mean time reference point is not necessary after each power on.

Only compatible with KA series display units.

Specifications

Measuring method	Electromagnetic induction system
Accuracy	100 to 500 mm ±5 µm 600 to 1800 mm ±7 µm 2000 to 3000 mm ±10 µm
Operation temperature	0-45 °C
Power supply	5V DC ± 10%
Cross section	54 x 22mm
Max. drive speed	50 m/min
Signal period	20 µm

Optional accessories

No.	Description
09AAB674A	Extension Cable 2m, for AT715
09AAB674B	Extension Cable 5m, for AT715
09AAB674C	Extension Cable 7m, for AT715
174-185D	Linear Scale Counter KA-213
174-183D	Linear Scale Counter KA-212

No.	Cable length [m]	Effective range	L^1 [mm]	L^2 [mm]	L^3 [mm]	L^4 [mm]	L^5 [mm]	L^6 [mm]	L^7 [mm]	L^8 [mm]
539-801R	3,4	100 mm	120	258	242	278				
539-802R	3,4	150 mm	170	308	292	328				
539-803R	3,4	200 mm	220	358	342	378				
539-804R	3,4	250 mm	270	408	392	428				
539-805R	3,4	300 mm	330	468	452	488				
539-806R	3,4	350 mm	380	518	502	538				
539-807R	3,4	400 mm	430	568	552	588				
539-808R	3,4	450 mm	480	618	602	638				
539-809R	3,4	500 mm	540	678	662	698	339	331		
539-811R	3,4	600 mm	640	778	762	798	389	381		
539-813R	3,4	700 mm	740	878	862	898	439	431		
539-814R	3,4	750 mm	780	918	902	938	459	451		
539-815R	3,4	800 mm	840	978	962	998	489	481		
539-816R	3,4	900 mm	940	1078	1062	1098	539	531		
539-817R	4,9	1000 mm	1040	1178	1162	1198	589	581		
539-818R	4,9	1100 mm	1140	1278	1262	1298	424	416	430	
539-819R	4,9	1200 mm	1240	1378	1362	1398	459	451	460	
539-820R	4,9	1300 mm	1340	1478	1462	1498	494	486	490	
539-821R	4,9	1400 mm	1440	1578	1562	1598	524	516	530	
539-822R	4,9	1500 mm	1540	1678	1662	1698	559	551	560	
539-823R	4,9	1600 mm	1640	1778	1762	1798	459	451	430	215
539-824R	4,9	1700 mm	1740	1878	1862	1898	479	471	460	230
539-825R	4,9	1800 mm	1840	1978	1962	1998	459	451	530	280
539-860R	4,9	2000 mm	2040	2178	2162	2198	539	531	550	
539-861R	4,9	2200 mm	2240	2378	2362	2398	469	461	480	
539-862R	6,9	2400 mm	2440	2578	2562	2598	509	501	520	
539-863R	6,9	2500 mm	2540	2678	2662	2698	529	521	540	
539-864R	6,9	2600 mm	2640	2778	2762	2798	549	541	560	
539-865R	6,9	2800 mm	2840	2978	2962	2998	489	481	500	
539-866R	6,9	3000 mm	3040	3178	3162	3198	529	521	530	

Extended cable 2 m is attached to 2400-3000 mm of effective length at signal cable 5 m, and it is 6,9 m in total!

Legend
L0 Effective range
L1 Travel range
L2-L4 Mounting hole pitch
L5-L8 Middle support positions

Refer to the DRO System leaflet for more details.

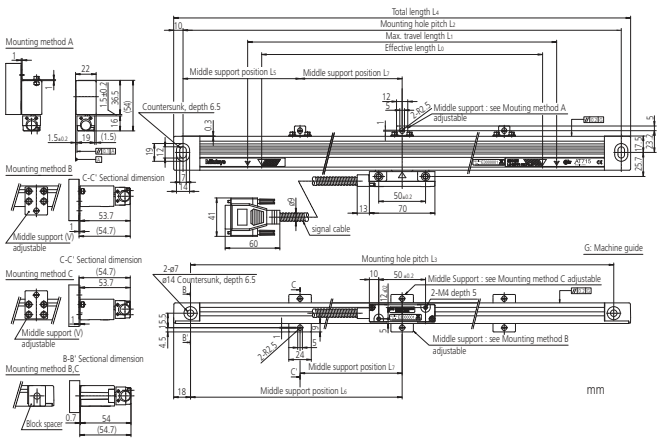

All products to be sold to commercial customers.
Product illustrations are without obligation. Product descriptions, in particular any and all technical specifications, are only binding when explicitly agreed upon.

Universal DRO KA-200 Counter

DRO counter for Linear Scales

This counter displays length indication transmitted from a linear scale.
The KA-Counter offers you the following benefits:

- Can be used as a “standard counter” or a “lathe counter” by modifying parameters.
- Downsizing, weight saving and multiple function have been realized.
- Sub display for easy operation.
- Text data can be output using the optional USB interface.
- The optional external interface RS-232C enables connection to a PC and a printer.

174-185D

No.	Axes	Mass
174-183D	2	1.25 kg
174-185D	3	1.33 kg

Functions	DRO counter for Linear Scales
ZERO SET	●
PRESET	●
Diameter display	●
1/2 calculation	●
mm/inch conversion	●
Bolt-hole circle machining	●
Scale reference points	●
Linearity error compensation	●
Zero approach function (Incremental mode)	●
Addition of 2-scale data	●
Coordinate system switching	●
Error message	●
Lower digit blanking out	●
Measurement direction setting	●
Memory backup	●
Pitch machinig	●
Resolution setting	●
Smoothing	●

Specifications

Display	7-segment, 8-digit + sign + 8-character alphabet LED display
Resolution	With AT100 Series: 0,05 - 0,0001 mm With AT715: 0,01 - 0,001 mm
Dimensions (WxDxH)	300 x 70 x 167 mm mm
Operation temperature	0°C to 45°C
Macro functions	Rectangular drilling and round milling newly added
Main features	Feed speed display; taper machining function; tool data; multipoint compensation; scale check function; calculation function
Output (optional)	RS-232C / USB

Optional accessories

No.	Description
06ACB391	Adapter A KA - AT
06ACB392	Adapter B KA - ST
06ACB393	Adapter C KA - LGF (OP)
06ACB913	Adapter A KA - LGF
06ACF941	Load/Zero Cable f. KA
06AET993	USB/RS 232 C code out unit
09EAA094	RS-232C Cable, DP1-VR/-VA to KA-Counter, 1m, 25 Pin Connector
12AAA882	RS232c Connecting Cable, For SJ301
63AAA108	RS-232C Signal Cable, D-Sub-25-D-Sub-9, 2m
936553	Remote Switch
937179T	Footswitch for SPC
937328	Extern load box
965004	RS 232 C Extern Load Switch

All products to be sold to commercial customers.
Product illustrations are without obligation. Product descriptions, in particular any and all technical specifications, are only binding when explicitly agreed upon.

DRO Extension cables selection guide

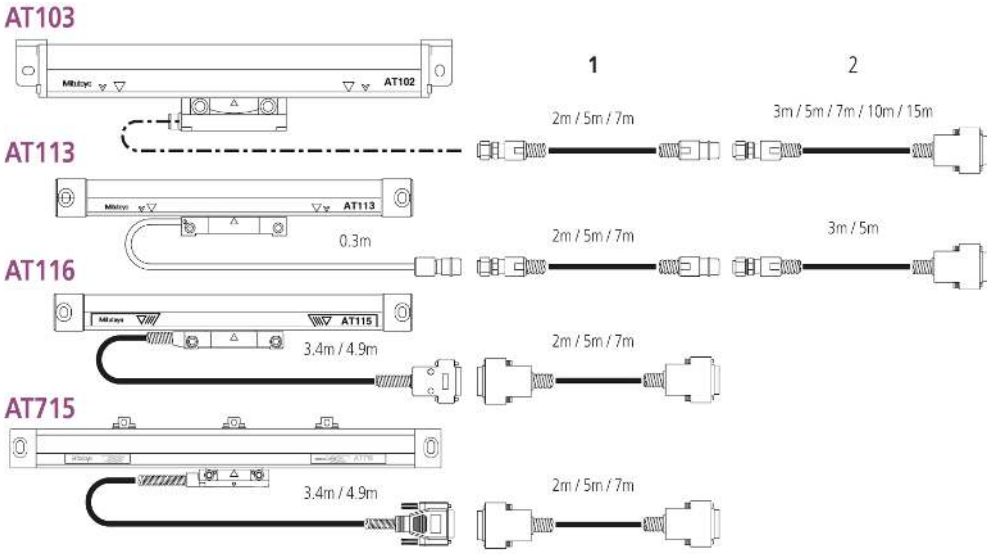

KA Counter

All products to be sold to commercial customers.
Product illustrations are without obligation. Product descriptions, in particular any and all technical specifications, are only binding when explicitly agreed upon.

Overview of NC Linear Scales System

	Model	Reference point	Absolute function	Output signal cycle of sinusoidal signal (μm)	Signal unit	No. of divisions	Resolution (μm)	Maximum response speed*1 (mm/s)	Minimum edge interval*2 (ns)
Separate Type Linear Scales	ST36B ST36C (ST36A) (ST36D)	Yes	—	4	— (PSU-200)	400	0.01	70	125
						200	0.02	150	
						80	0.05	360	
						40	0.1	720	
	ST46-EZA	Yes	—	20	—	400	0.05	450	100
						200	0.1	900	
						40	0.5	2600	
						20	1	2600	
						4	5	2600	
	ABS ST700	—	Yes	—	—	—	0.1	5000	—
	ABS ST1300	—	Yes	—	—	—	0.001	8000*3	—
							0.01		
Assembly Type Linear Scales	AT113	Yes	—	20	PSU-200	200	0.1	800	125
						100	0.2	1600	
						80	0.25	2000	
						40	0.5		
						20	1		
						10	2		
						8	2.5		
						4	5		
	AT211	Yes	—	20	—	200	0.1	710	125
						100	0.2	1400	
						40	0.5	2000	
						20	1		250
						8	2.5		500
						4	5		1000
	ABS AT1100	—	Yes	—	—	—	0.05	3000	—
	ABS AT1300	—	Yes	—	—	—	0.001	3000	—
							0.01		
							0.05		

*1 Maximum response speed of pulse output type uses the logical value (IC specification) with a margin of about 10%, and is limited depending on the scale response speed and resolution.
*2 For information on minimum edge interval, see "Explanation of Terms" on page 74.
The guaranteed value for minimum edge interval is +0%, -10%.
For some models, values other than shown above can also be selected.
*3 It depends on the interface.

All products to be sold to commercial customers.
Product illustrations are without obligation. Product descriptions, in particular any and all technical specifications, are only binding when explicitly agreed upon.

NC Linear Scales ST36

Open scales with Sine & Square-Wave Output

This is a high resolution, high accuracy, portable model designed for exposed installations. The ST36 offers you the following benefits:

- High reliability with stable signal output.
- Outputs two-phase sinusoidal signal (signal pitch 4µm) and two-phase square-wave signal simultaneously.
- Outputs two-phase sinusoidal signal (signal pitch 4µm) and two-phase square-wave signal simultaneously.
- You are provided with a compact interface box as standard.
  Installation dimensions are available from Mitutoyo – please contact.

ST36

Specifications

Accuracy	10 - 300 mm ±0,5 µm 350 - 500 mm ±1 µm 600 - 1000 mm ±2 µm 1100 - 3000 mm ±2 µm/m
Output waveform	Two 90° phase-shifted sinusoidal signals 2Vpp (Model A and C) Two 90° phase-shifted square-wave signals (Model B and C) RS422 Line Driver
Scale reference points	10 -75 mm Center point scale 100 - 3000 mm every 50 mm
Max. drive speed	1200 mm/sec
Power supply	5V DC ± 10%
Signal period	8 µm
Cross section	22 x 14,9mm
Resolution	0,01; 0,02; 0,05; 0,1 µm
Signal period	4 µm

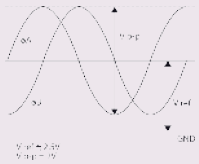

Model A/C

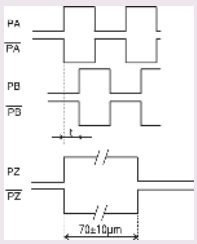

Model B/C

Refer to the NC System leaflet for more details

All products to be sold to commercial customers.
Product illustrations are without obligation. Product descriptions, in particular any and all technical specifications, are only binding when explicitly agreed upon.

Mitutoyo

NC Linear Scales ST46-EZA

Fotoelectric metal tape linear scales

- Grating pitch 20 µm
- Zero reference not coded
- Output signal sinusoidal 2Vpp or square wave signal(RS 422) sticky or double sided tape version
- LED display function anomalie

No.
ST46EZA Type B
ST46EZA Type C

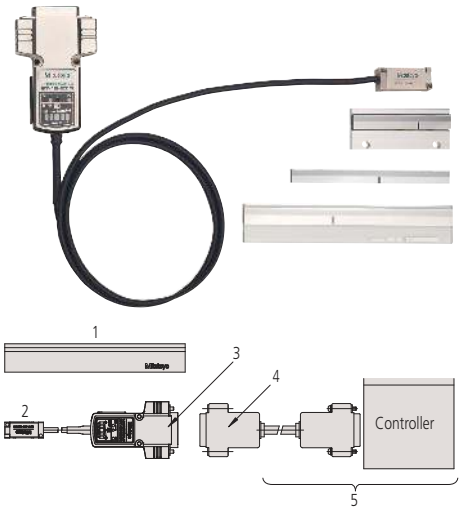

1: Main scale; 2: Detector unit; 3: Output connector (included); 4: Feedback cable; 5: To be supplied by customer (feedback cable/controller)

Specifications

Effective range	10 to 3000 mm
Output signal	Type B: 2-phase square wave signals, reference point pulse, external reset input Type C: 2-phase square wave signals, reference point pulse, 2 phase sinusoidal signal
Scale reference point	With scale reference point (50 mm pitch, 10 to 80 mm: Center point)
Operating temperature / humidity	0 to 40°C, 20 to 80% RH (no condensation)
Storage temperature / humidity	-20 to 60°C, 20 to 80% RH (no condensation)
Power supply voltage	5VDC ± 5%
Cross section	12,5 x 12,1mm / 17,1 x 14mm / 20 x 9,33mm (depends on the type)
Maximum response speed	2,6 m/s (at sine wave amplitude -3dB)
Internal expansion coefficient	(8±1) x 10-6°C
Scale specifications	Grating pitch 20 µm, Material: metal tape (Glas on request)

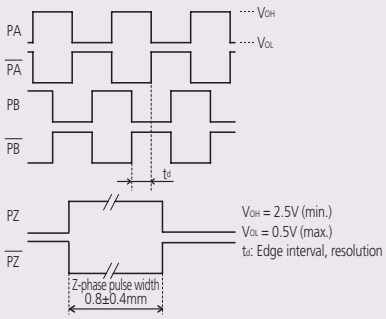

Output Signal Type B

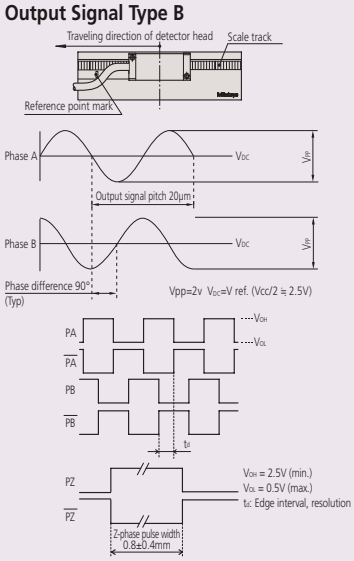

Output Signal Type C

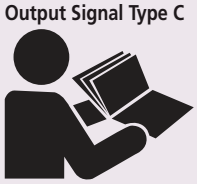

Refer to the NC System leaflet for more details

All products to be sold to commercial customers.
Product illustrations are without obligation. Product descriptions, in particular any and all technical specifications, are only binding when explicitly agreed upon.

NC Linear Scales ABS ST700

Specifications

Detection Method	Electromagnetic induction
Effective range	100mm - 3000 mm (3200mm - 6000mm optional)
Accuracy	(5+5L0/1000)µm
Response speed	5000 mm/s
Cross section	28 x 18,6mm
Resolution	0,1 µm

Refer to the NC System leaflet for more details

Electromagnetic induction Absolute Scale

ABSOLUTE IP65

ABSOLUTE scales have eliminated the need to re-establish the origin.
The ST700 offers you the following benefits:

- It is optimized for the control of linear motors.
- Optimized for high-speed, high-acceleration control.
- A non-contact detection system ensures a long service life for your product.
- Signal adjustment at installation is automatically performed with dedicated software.

All products to be sold to commercial customers.
Product illustrations are without obligation. Product descriptions, in particular any and all technical specifications, are only binding when explicitly agreed upon.

NC Linear Scales ABS ST1300

High-speed, high-resolution Absolte Tape Scales

Long, fast and diverse connectivity

- Realizes a 12m maximum effective length, 8-m/s max. response speed and 1nm minimum resolution.
- Extensive interface compatibility. See specifications below for details.
- Outstanding robustness against contamination compared to earlier photoelectric types achieved using a new detection principle.
- Choice between double-sided tape, fixed-ends and center mounting methods
- Signal validation program facilitates mounting adjustment and maintenance

Double-ended mounting type

Double-sided tape mounting type

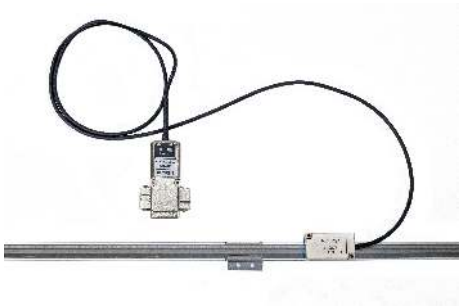

Center mounting type

Specifications

Detection Method	Optical
Maximum effective range	12 m (depending on mounting type)
Accuracy	10 µm/m (± 5µm)
Cross section	22 x 30,1 or 22 x 25,45 mm (depending on mounting type)
Max. response speed	8 m/s (Varies according to the interface)
Min. resolution	1 nm / 10 nm
Scale specifications	Metal tape
Applicable Interfaces	FANUC, Mitsubishi, Yaskawa, Panasonic, Mitutoyo

Refer to the NC System leaflet for more details

All products to be sold to commercial customers.
Product illustrations are without obligation. Product descriptions, in particular any and all technical specifications, are only binding when explicitly agreed upon.

DRO Linear Scales AT113

Sealed incremental - slimline scale housing

These linear scales are built for limited installation space

- Glass scale - Zero not coded
- Expansion factor (8 ± 1)x $10^{-6}/K^{-1}$
- An armoured inox signal cable is used to connect the DRO counter

539-201-30

Specifications

Accuracy	(5+5L/1000) µm L = Effective range (mm)
Output waveform	Two 90° phase-shifted sinusoidal signals (2Vpp)
Operation temperature	0°C to 45°C
Power supply	5V DC ± 10%
Cross section	52 x 22mm
Max. drive speed	120 m/min
Signal period	20 µm
Scale reference points	every 50 mm
Dust/water protection level	IP53

Optional accessories

No.	Description
09AAA033A	Extension Cable 2M
09AAA033B	Extension Cable 5M
09AAA033C	Extension Cable 7M
174-183D	Linear Scale Counter KA-212
174-185D	Linear Scale Counter KA-213

No.	Cable length [m]	Effective range	L^1 [mm]	L^2 [mm]	L^3 [mm]	L^4 [mm]	L^5 [mm]	L^6 [mm]	L^7 [mm]	Mass [kg]
539-201-30.	3,5	100 mm	120	258	242	276				0.9
539-202-30.	3,5	150 mm	170	308	292	326				0.905
539-203-30.	3,5	200 mm	220	358	342	376				0.943
539-204-30.	3,5	250 mm	270	408	392	426				0.981
539-205-30.	3,5	300 mm	330	468	452	486				1.027
539-206-30.	3,5	350 mm	380	518	502	536				1.064
539-207-30.	3,5	400 mm	430	568	552	586				1.102
539-208-30.	3,5	450 mm	480	618	602	636				1.14
539-209-30.	3,5	500 mm	540	678	662	696	339	331		1.86
539-211-30.	3,5	600 mm	640	778	762	796	389	381		1.3
539-213-30.	3,5	700 mm	740	878	862	896	439	431		1.3
539-215-30.	3,5	800 mm	840	978	962	996	489	481		1.4
539-216-30.	3,5	900 mm	940	1078	1062	1096	539	531		1.4
539-217-30.	5	1000 mm	1040	1178	1162	1196	589	581		1.9
539-218-30.	5	1100 mm	1140	1278	1262	1296			430	1.9
539-219-30.	5	1200 mm	1240	1378	1362	1396			460	2.0
539-220-30.	5	1300 mm	1340	1478	1462	1496			490	2.2
539-221-30.	5	1400 mm	1440	1578	1562	1596			530	2.2
539-222-30.	5	1500 mm	1540	1678	1662	1696			560	2.2

Legend
L0 Effective range
L1 Travel range
L2-L3 Mount interval
L4 Overall length
L5-L7 Support bracket position

Refer to the DRO System leaflet for more details.

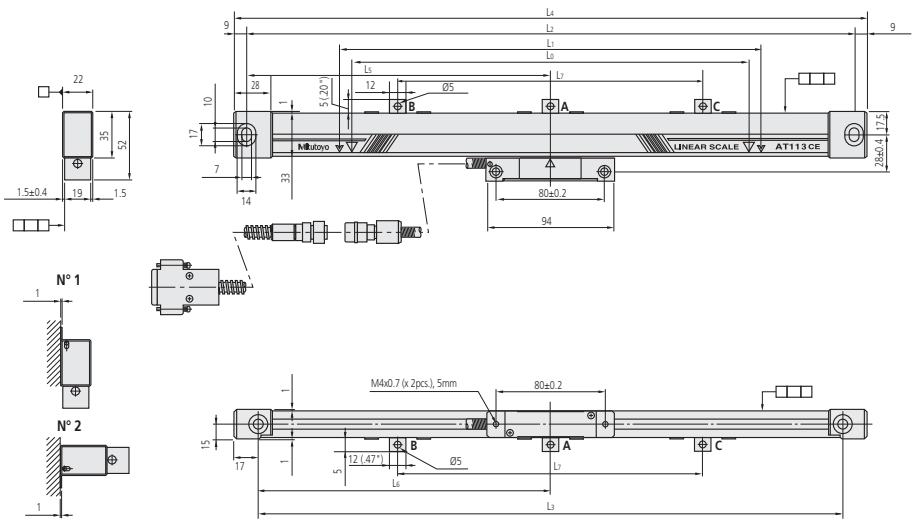

N°1-N°2 Mounting method

All products to be sold to commercial customers.
Product illustrations are without obligation. Product descriptions, in particular any and all technical specifications, are only binding when explicitly agreed upon.

Mitutoyo

NC Linear Scales AT211

Sealed incremental - slimline size housing - high traverse speed-with very high repeteability

- 20 µm grating pitch-output signal square wave (RS 422)
- suggested resolution 1 - 0,5 µm
- high traverse speed
- Accuracy - standard version: from 100 up to 1500 mm =± 3 µm
- Accuracy - high repeteability from 100 up to 500 mm =± 2 µm
- Protection from IP 53 up to IP 64 (pressure device connection)

AT211A

AT211B

Refer to the NC System leaflet for more details

Specifications

Accuracy	100 to 1500 mm (3+3L/1000) µm (standard type) (2+2L/1000) µm (high-accuracy type) 500 to 1500 mm (3+3L/1000) µm L = Effective range (mm)
Output waveform	Two 90° phase-shifted quadrature signals (RS422) Differential line driver
Power supply voltage	5V DC ± 10%
Cross section	58 x 20mm / 52 x 22mm
Max. drive speed	up to 120 m/min
Resolution	0,1; 0,5; 1 µm
Signal period	20 µm

All products to be sold to commercial customers.
Product illustrations are without obligation. Product descriptions, in particular any and all technical specifications, are only binding when explicitly agreed upon.

NC Linear Scales ABS AT1100

Specifications

Detection Method	Electromagnetic induction
Maximum effective range	3040 mm
Accuracy	3+5L/1000) µm L= 140 to 2040 mm (5+5L/1000) µm L= 2240 to 3040 mm
Cross section	85 x 37mm
Response speed	3 m/s
Resolution	0.05 µm
Compatible interface	FANUC, Mitsubishi, Siemens, Mitutoyo

Refer to the NC System leaflet for more details

Electromagnetic induction Absolute Scale

ABSOLUTE®

- New design to avoid infiltration of coolant and dust using a rubber highly resistant to coolant attack for highest reliability
- Widest sensor-to-scale air gap for electromagnetic induction scales of 0,4 mm - 4 times wider than conventional optical or electromagnetic encoder
- Increased air gap reduces the likelihood of failure due to the accumulation of contaminants and is one of the world's largest to be found in a machine tool scale
- De facto standard frame multipoint mounting method has been adopted to provide high resistance to vibration and shock
- 6 times higher accuracy than previous scales due to improved signal processing technology
- Compatible with the high-speed serial interface from leading machine-tool companies, allowing direct connection to an NC controller

All products to be sold to commercial customers.
Product illustrations are without obligation. Product descriptions, in particular any and all technical specifications, are only binding when explicitly agreed upon.

NC Linear Scales ABS AT1300

ABSOLUTE®

Absolute Scale Unit (Slim Type)

- High-rigidity (S-type) and high-accuracy (H-type) version available
- Outstanding resistance to contamination compared to conventional optical types by using a new detection principle
- Features a new coolant-proof design incorporating a high-performance rubber seal to provide higher reliability in the harsh factory environment.
- Delivers high accuracy and the outstanding resolution of 0,001 µm, the best-in-class in absolute scales.
- Allows space-saving design thanks to a slim form. (AT500-S and AT500-H are compatible with each other in installation.)
- Supports the interfaces of various manufacturers allowing a variety of system configurations

S-Type

H-Type

Specifications

Detection Method	Optical, Transmission double telecentric
Maximum effective range	100 to 2200 mm S-Type/ 100 to 1000mm H-Type
Cross section	66 x 23 mm / 24 x 65 mm
Response speed	3000 mm/s
Resolution	0,001/0,01/0,05 µm
Compatible interface	Fanuc, Mitsubishi, Mitutoyo

Refer to the NC System leaflet for more details

All products to be sold to commercial customers.
Product illustrations are without obligation. Product descriptions, in particular any and all technical specifications, are only binding when explicitly agreed upon.

Horizontal ABSOLUTE Scale Coolant Proof IP66

Functions	Horizontal
ORIGIN (ABS-Zero)	●
Low voltage alarm	●
Data output	●

Specifications

Max. response speed	Unlimited
Repeatability	0,01 mm

Optional accessories

No.	Description
02AZD790A	U-WAVE-T Connection Cable A, with Data Button IP Caliper Type
05CZA624	Digimatic Cable with Data Button IP Type, 1m, Caliper Type
05CZA625	Digimatic Cable with Data Button IP Type, 2m, Caliper Type
06AFM380A	USB Input Tool Direct (Digimatic USB), Digi/Digi2, With Data Button IP Caliper Type

Consumable spares

No.	Description
938882	Battery SR44 1.5V

Horizontal

You can use this scale unit in adverse environments with water and cutting oil due to it new detection method (electromagnetic induction).

- Specially designed output cables are developed to maintain the water resistant structure.
- You will have no overspeed error since the ABSOLUTE scale does not depend on counting scale graduations.
- Once an absolute zero (origin) point is set, the Digimatic Scale Unit shows the absolute distance from this point when it is powered on, rather than „0“.

572-601

Metric

No.	Range [mm]	Accuracy	L1 [mm]	L2 [mm]	Mass [g]
572-600	0 - 100	0,03 mm	209	185	390
572-601	0 - 150	0,03 mm	259	235	410
572-602	0 - 200	0,03 mm	311	287	430

mm

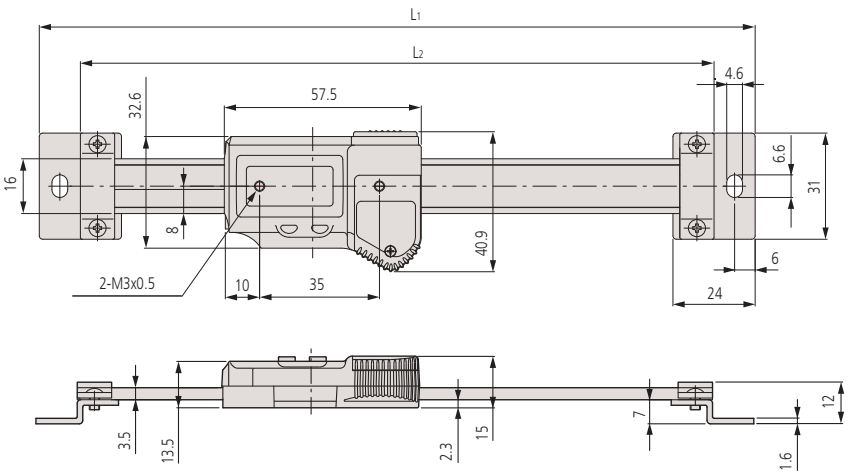

All products to be sold to commercial customers.
Product illustrations are without obligation. Product descriptions, in particular any and all technical specifications, are only binding when explicitly agreed upon.

Horizontal ABSOLUTE Scale Standard

ABSOLUTE®

This unit has an ABSOLUTE capacitive-type scale.

- The ZERO point is set only once and is stored as the absolute ZERO point until the next battery replacement.
- You can make the highest precision measurements even at the highest drive speed.
- The display has large characters, making it easy to read.

Metric

No.	Range [mm]	Accuracy	L1 [mm]	L2 [mm]	Mass [g]
572-200-30	0 - 100	0,03 mm	209	185	230
572-201-30	0 - 150	0,03 mm	259	235	250
572-202-30	0 - 200	0,03 mm	311	287	270
572-203-10	0 - 300	0,04 mm	444	420	370

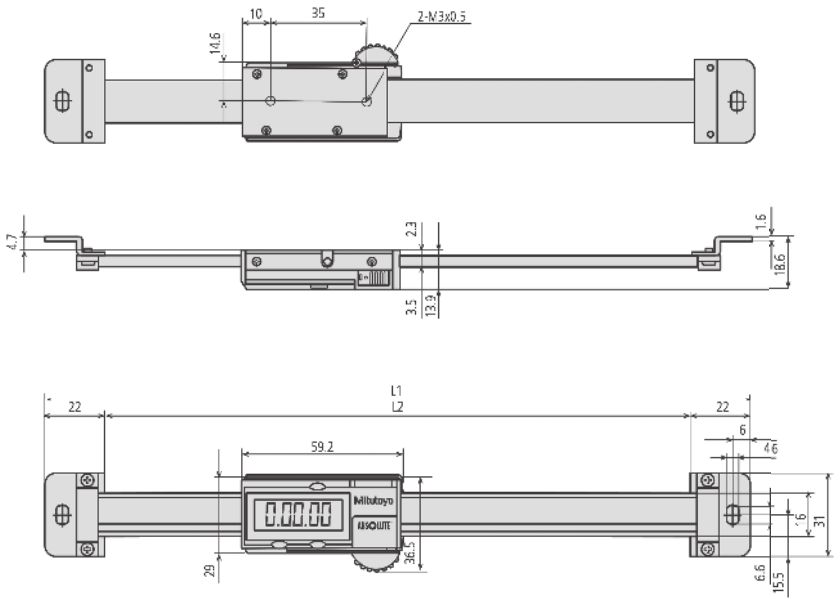

100-200 mm

Functions	
ON/OFF	●
Low voltage alarm	●
Data output	●
ZERO SET	●
ORIGIN	●

Specifications

Max. response speed	Unlimited

Optional accessories

No.	Description
02AZD790C	U-WAVE-T Connection Cable C, Straight, with Data Button
06AFM380C	USB Input Tool Direct (Digimatic USB), Digi/Digi2, Straight, with Data Button
905338	Digimatic Cable, Flat Straight Type, 1m
905409	Digimatic Cable, Flat Straight Type, 2m
905689	Digimatic Cable, Flat L-Shape Type, 1m
905690	Digimatic Cable, Flat L-Shape Type, 2m
905691	Digimatic Cable, Flat L-Shape Right Type, 1m
905692	Digimatic Cable, Flat L-Shape Right Type, 2m
905693	Digimatic Cable, Flat L-Shape Left Type, 1m
905694	Digimatic Cable, Flat L-Shape Left Type, 2m
959143	Data Hold Unit
959149	Digimatic Cable, Straight, Data Button,, 1m
959150	Digimatic Cable, Straight, Data Button,, 2m

Consumable spares

No.	Description
938882	Battery SR44 1.5V

All products to be sold to commercial customers.
Product illustrations are without obligation. Product descriptions, in particular any and all technical specifications, are only binding when explicitly agreed upon.

Horizontal ABSOLUTE Scale Measurement Direction Switching

ABSOLUTE®

Functions	
ON/OFF	●
DATA (output with cable) / HOLD (display value)	●
Low voltage alarm	●
Data output	●
ZERO SET	●
ORIGIN	●
PRESET	●
Counting direction switchable	●

This unit has an ABSOLUTE capacitive-type scale.
It offers you the following benefits:

- The ZERO point is set only once and is stored as the ABSOLUTE ZERO point until the next battery replacement.
- You can make the highest precision measurements even at the highest drive speed.
- The display has large characters, making it easy to read.

572-461

Specifications

Max. response speed	Unlimited

Optional accessories

No.	Description
02AZD790C	U-WAVE-T Connection Cable C, Straight, with Data Button
06AFM380C	USB Input Tool Direct (Digimatic USB), Digi/Digi2, Straight, with Data Button
905338	Digimatic Cable, Flat Straight Type, 1m
905409	Digimatic Cable, Flat Straight Type, 2m
905689	Digimatic Cable, Flat L-Shape Type, 1m
905690	Digimatic Cable, Flat L-Shape Type, 2m
905691	Digimatic Cable, Flat L-Shape Right Type, 1m
905692	Digimatic Cable, Flat L-Shape Right Type, 2m
905693	Digimatic Cable, Flat L-Shape Left Type, 1m
905694	Digimatic Cable, Flat L-Shape Left Type, 2m

Consumable spares

No.	Description
938882	Battery SR44 1.5V

Metric Without diameter function, with reversible counting direction

No.	Range [mm]	Accuracy	t [mm]	L1 [mm]	L2 [mm]	H [mm]	Mass [g]
572-460	0 - 100	0,03 mm		244	220		250
572-461	0 - 150	0,03 mm		294	270		280
572-462	0 - 200	0,03 mm		344	320		310
572-463	0 - 300	0,04 mm		444	420		370
572-464	0 - 450	0,04 mm	6	594	570	14,6	760
572-465	0 - 600	0,05 mm	6	774	750	14,6	900
572-466	0 - 800	0,06 mm	10	974	950	18,6	1710
572-467	0 - 1000	0,07 mm	10	1174	1150	18,6	2040

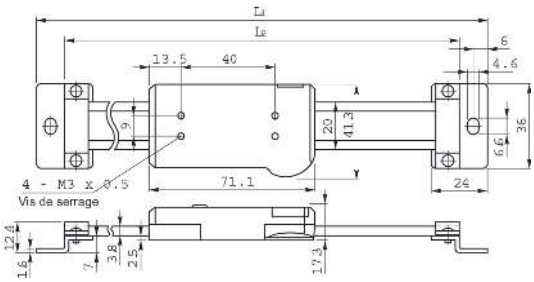

100-300 mm

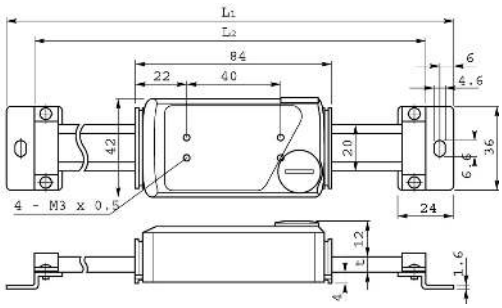

450-1000 mm

All products to be sold to commercial customers.
Product illustrations are without obligation. Product descriptions, in particular any and all technical specifications, are only binding when explicitly agreed upon.

Mitutoyo

Horizontal ABSOLUTE Scale Diameter Function

ABSOLUTE®

- The ZERO point is set only once and is stored as the ABSOLUTE ZERO point until the next battery replacement
- You can make the highest precision measurements even at the highest drive speed.

572-483-10

Metric

Horizontal multi-function type with diameter displaying function

No.	Range [mm]	Accuracy	G [mm]	L1 [mm]	L2 [mm]	H [mm]	t [mm]	Mass [g]
572-480-10	0 - 100	0,03 mm		244	220			250
572-481-10	0 - 150	0,03 mm		294	270			280
572-482-10	0 - 200	0,03 mm		344	320			310
572-483-10	0 - 300	0,04 mm		444	420			370
572-484-10	0 - 450	0,04 mm	23,2	594	570	14,6	6	760
572-485-10	0 - 600	0,05 mm	23,2	774	750	14,6	6	900
572-486-10	0 - 800	0,06 mm	27,2	974	950	18,6	10	1710
572-487-10	0 - 1000	0,07 mm	27,2	1174	1150	17,8	10	2040

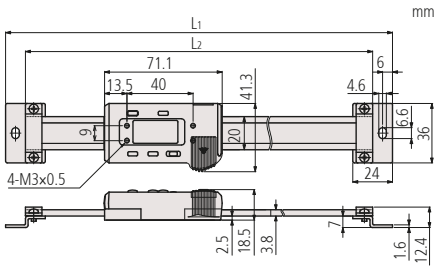

100-300 mm

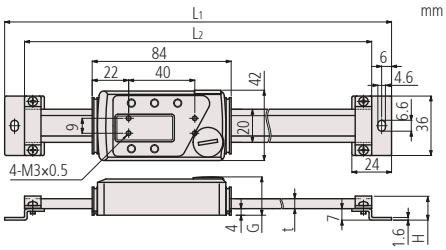

450-1000 mm

Functions	
ON/OFF	●
DATA (output with cable) / HOLD (display value)	●
Low voltage alarm	●
Data output	●
ZERO SET	●
PRESET	●
Diameter function	●
ORIGIN	●

Specifications

Max response speed	Unlimited

Optional accessories

No.	Description
02AZD790C	U-WAVE-T Connection Cable C, Straight, with Data Button
06AFM380C	USB Input Tool Direct (Digimatic USB), Digi/Digi2, Straight, with Data Button
905338	Digimatic Cable, Flat Straight Type, 1m
905409	Digimatic Cable, Flat Straight Type, 2m
905689	Digimatic Cable, Flat L-Shape Type, 1m
905690	Digimatic Cable, Flat L-Shape Type, 2m
905691	Digimatic Cable, Flat L-Shape Right Type, 1m
905692	Digimatic Cable, Flat L-Shape Right Type, 2m
905693	Digimatic Cable, Flat L-Shape Left Type, 1m
905694	Digimatic Cable, Flat L-Shape Left Type, 2m

Consumable spares

No.	Description
938882	Battery SR44 1.5V

All products to be sold to commercial customers.
Product illustrations are without obligation. Product descriptions, in particular any and all technical specifications, are only binding when explicitly agreed upon.

Vertical ABSOLUTE Scale Standard

ABSOLUTE®

Functions	
ON/OFF	●
Low voltage alarm	●
Data output	●
ZERO SET	●
ORIGIN	●

Specifications

Max. response speed	Unlimited

Optional accessories

No.	Description
02AZD790C	U-WAVE-T Connection Cable C, Straight, with Data Button
06AFM380C	USB Input Tool Direct (Digimatic USB), Digi/Digi2, Straight, with Data Button
905338	Digimatic Cable, Flat Straight Type, 1m
905409	Digimatic Cable, Flat Straight Type, 2m
905689	Digimatic Cable, Flat L-Shape Type, 1m
905690	Digimatic Cable, Flat L-Shape Type, 2m
905691	Digimatic Cable, Flat L-Shape Right Type, 1m
905692	Digimatic Cable, Flat L-Shape Right Type, 2m
905693	Digimatic Cable, Flat L-Shape Left Type, 1m
905694	Digimatic Cable, Flat L-Shape Left Type, 2m
959143	Data Hold Unit
959149	Digimatic Cable, Straight, Data Button,, 1m
959150	Digimatic Cable, Straight, Data Button,, 2m

Consumable spares

No.	Description
938882	Battery SR44 1.5V

This unit has an ABSOLUTE capacitive-type scale.
It offers you the following benefits:

- The ZERO point is set only once and is stored as the absolute ZERO point until the next battery replacement.
- You can make the highest precision measurements even at the highest drive speed.
- The display has large characters, making it easy to read.

572-302-10

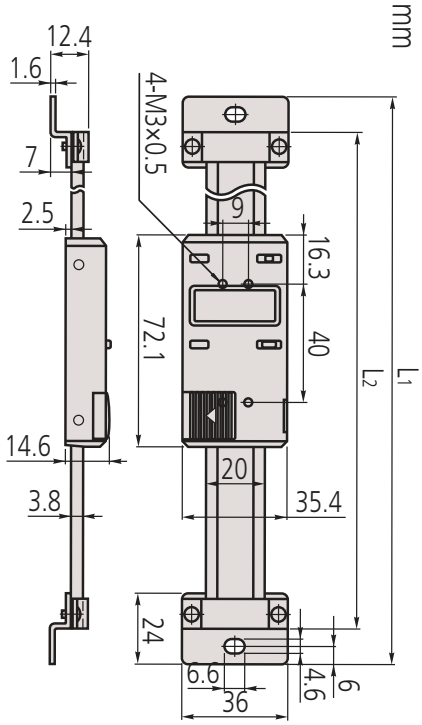

Metric

No.	Range [mm]	Accuracy	L1 [mm]	L2 [mm]	Mass [g]
572-300-10	0 - 100	0,03 mm	244	220	250
572-301-10	0 - 150	0,03 mm	294	270	280
572-302-10	0 - 200	0,03 mm	344	320	310
572-303-10	0 - 300	0,04 mm	444	420	370

All products to be sold to commercial customers.
Product illustrations are without obligation. Product descriptions, in particular any and all technical specifications, are only binding when explicitly agreed upon.

Mitutoyo

Vertical ABSOLUTE Scale Measurement Direction Switching

ABSOLUTE®

This unit has an ABSOLUTE capacitive-type scale.
It offers you the following benefits:

- The ZERO point is set only once and is stored as the absolute ZERO point until the next battery replacement.
- The display has large characters, making it easy to read.
- Measurement direction switching function is included.

572-560

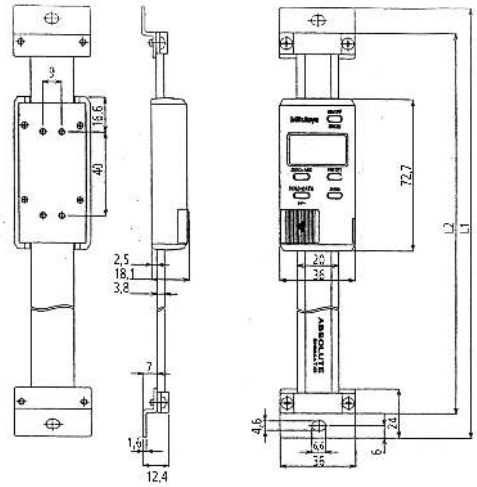

100-300 mm

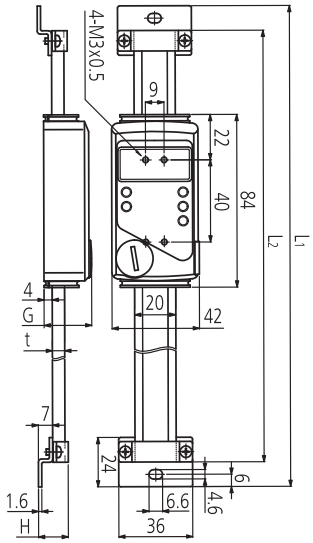

450-1000 mm

Metric

No.	Range [mm]	Accuracy	G [mm]	L1 [mm]	L2 [mm]	H [mm]	t [mm]	Mass [g]
572-560	0 - 100	0,03 mm		244	220			250
572-561	0 - 150	0,03 mm		294	270			280
572-562	0 - 200	0,03 mm		344	320			310
572-563	0 - 300	0,04 mm		444	420			370
572-564	0 - 450	0,04 mm	23,2	594	570	14,6	6	760
572-565	0 - 600	0,05 mm	23,2	774	750	14,6	6	900
572-566	0 - 800	0,06 mm	27,2	974	950	18,6	10	1710
572-567	0 - 1000	0,07 mm	27,2	1174	1150	18,6	10	2040

Functions	
ORIGIN (ABS-Zero)	■
ON/OFF	■
DATA (output with cable) / HOLD (display value)	■
Data output	■
ZERO SET	■
PRESET	■
Counting direction switchable	■

Specifications

Max. response speed	Unlimited

Optional accessories

No.	Description
02AZD790C	U-WAVE-T Connection Cable C, Straight, with Data Button
06AFM380C	USB Input Tool Direct (Digimatic USB), Digi/Digi2, Straight, with Data Button
905338	Digimatic Cable, Flat Straight Type, 1m
905409	Digimatic Cable, Flat Straight Type, 2m
905689	Digimatic Cable, Flat L-Shape Type, 1m
905690	Digimatic Cable, Flat L-Shape Type, 2m
905691	Digimatic Cable, Flat L-Shape Right Type, 1m
905692	Digimatic Cable, Flat L-Shape Right Type, 2m
905693	Digimatic Cable, Flat L-Shape Left Type, 1m
905694	Digimatic Cable, Flat L-Shape Left Type, 2m

Consumable spares

No.	Description
938882	Battery SR44 1.5V

All products to be sold to commercial customers.
Product illustrations are without obligation. Product descriptions, in particular any and all technical specifications, are only binding when explicitly agreed upon.

Vertical ABSOLUTE Scale Diameter Function

ABSOLUTE®

Functions
ON/OFF
DATA (output with cable) / HOLD (display value)
Low voltage alarm
Data output
ZERO SET
PRESET
Diameter function
ORIGIN

Specifications

Max. drive speed	Unlimited

Optional accessories

No.	Description
02AZD790C	U-WAVE-T Connection Cable C, Straight, with Data Button
06AFM380C	USB Input Tool Direct (Digimatic USB), Digi/Digi2, Straight, with Data Button
905338	Digimatic Cable, Flat Straight Type, 1m
905409	Digimatic Cable, Flat Straight Type, 2m
905689	Digimatic Cable, Flat L-Shape Type, 1m
905690	Digimatic Cable, Flat L-Shape Type, 2m
905691	Digimatic Cable, Flat L-Shape Right Type, 1m
905692	Digimatic Cable, Flat L-Shape Right Type, 2m
905693	Digimatic Cable, Flat L-Shape Left Type, 1m
905694	Digimatic Cable, Flat L-Shape Left Type, 2m

Consumable spares

No.	Description
938882	Battery SR44 1.5V

This unit has an ABSOLUTE capacitive-type scale.

- The ZERO point is set only once and is stored as the absolute ZERO point until the next battery replacement.
- The display has large characters, making it easy to read.
- Diameter measurement function is included.

572-580

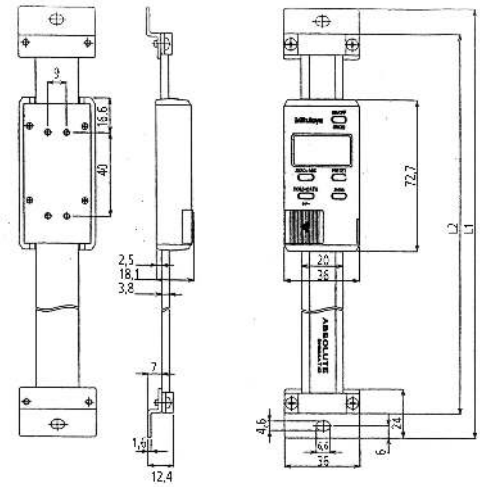

100-300 mm

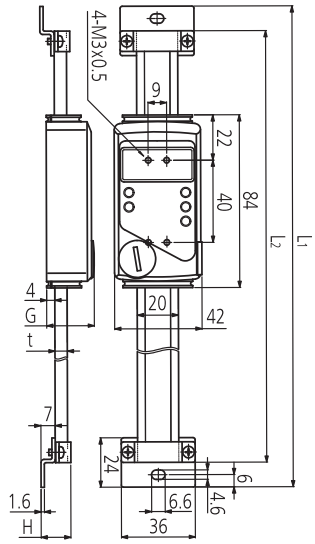

450-1000 mm

Metric

No.	Range [mm]	Accuracy	G [mm]	L1 [mm]	L2 [mm]	H [mm]	t [mm]	Mass [g]
572-580-10	0 - 100	0,03 mm		244	220			250
572-581-10	0 - 150	0,03 mm		294	270			280
572-582-10	0 - 200	0,03 mm		344	320			310
572-583-10	0 - 300	0,04 mm		444	420			370
572-584-10	0 - 450	0,04 mm	23,2	594	570	14,6	6	760
572-585-10	0 - 600	0,05 mm	23,2	774	750	14,6	6	900
572-586-10	0 - 800	0,06 mm	27,2	974	950	18,6	10	1710
572-587-10	0 - 1000	0,07 mm	27,2	1174	1150	18,6	10	2040

All products to be sold to commercial customers.
Product illustrations are without obligation. Product descriptions, in particular any and all technical specifications, are only binding when explicitly agreed upon.

Mitutoyo

Measuring Microscopes
Page 421

Microscope Units
Page 438

Long Working Distance Objectives
Page 440

Measuring Projectors
Page 453

Pocket Comparator
Page 468

TAGLENS
Page 470

All products to be sold to commercial customers.
Product illustrations are without obligation. Product descriptions, in particular any and all technical specifications, are only binding when explicitly agreed upon.

Measuring Microscope TM Generation B Series

With this Toolmaker's Microscope you can measure dimensions and angles on small workpieces thanks to the optional analogue or digital micrometer heads and the built-in circular scale.

Further benefits of the TM Generation B include:

- Toolmakers microscopes well-suited for measuring dimensions and angles of features on small workpieces with the XY stage and rotating eyepiece scale.
- Compact design with recessed grips for better portability. The slim design makes this microscope ideal for use in areas with limited space.
- Powerful adjustable LED light sources for contour and surface illumination provide optimum lighting conditions for workpiece inspection.
- The TM Generation B is available with work stages of 50 x 50 mm or 100 x 50 mm.

Specifications

Observation image	Erect
Angle reading	Range: 360° Minimum reading: 6' (by vernier)
Objective lens	2X **(176-138)** Working distance: 67 mm Optional: 5X, 10X
Eyepiece	15X **(176-116)**, View field ø13 mm Optional: 10X, 20X
Total magnification	30X
Transmitted illumination	Light source: White LED with green filter Functions: Light intensity adjustable
Surface illumination	Light source: White LED Functions: Light intensity adjustable
Power supply	100/240V AC, 50/60Hz
Mass	TM-505B: 14 [kg] TM-1005B: 15 [kg]

Standard accessories

No.	Description
176-116	Eyepiece for TM 15X
176-126	Reticle for TM, 90° Broken Cross-hair
176-138	Objective Lens for TM 2X

Optional accessories

No.	Description
63AAA001	LED ring light, for TM-500
63AAA353	HDMI USB camera set for TM microscopes

HDMI USB camera set for TM microscopes (63AAA353) - Set includes:
63AAA059 - HDMI16MDPX camera, including HDMI cable, mouse and simple calculation and reporting software on SD card
63AAA060 - 0,37X C-mount to Eyepiece adapter for TM microscopes
63AAA155 - Mechanical adapter for mounting the HDMI camera on the ocular tube

Optional LED ring light 63AAA001

Digital camera for TM microscopes

Mounting the HDMI6MDPX digital camera into the ocular tube transforms the TM microscope into a digital microscope.

- HDMI6MDPX, 6 megapixel colour camera with direct HDMI output to a monitor, no PC necessary
- Integrated SD card for saving images and pre-installed software for performing basic in-screen measurements
- Intuitive operation of the software with standard supplied USB mouse

TM-505B fitted with optional digimatic micrometer heads

Rotating eyepiece with angle reading

TM-1005B with optional LED ring light (63AAA001), 0.37X Eyepiece adapter (63AAA060) and digital HDMI camera (63AAA059)

All products to be sold to commercial customers.
Product illustrations are without obligation. Product descriptions, in particular any and all technical specifications, are only binding when explicitly agreed upon.

Mitutoyo

Measuring Microscope TM Generation B Series

No.	Model	XY stage table top size	Effective area of table	XY stage travel range	Max. workpiece height
176-818D	TM-505B	152 x 152 mm	96 x 96 mm	50 x 50 mm	115 mm
176-819D	TM-1005B	240 x 152 mm	154 x 96 mm	100 x 50 mm	107 mm

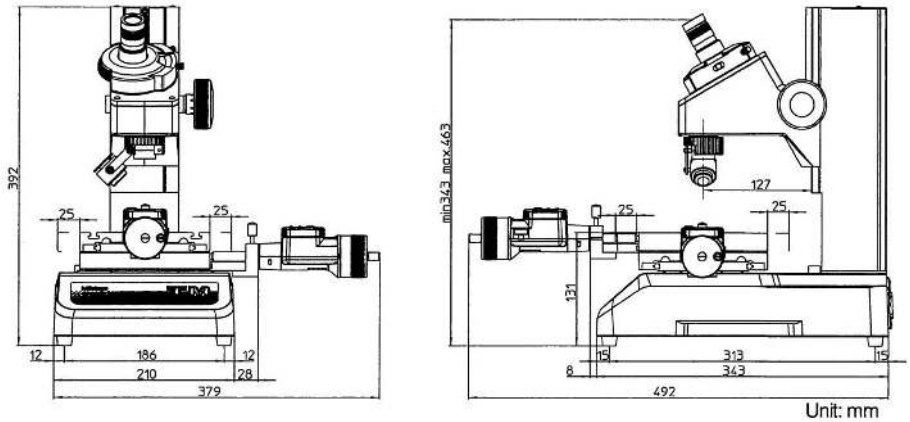

TM-505B

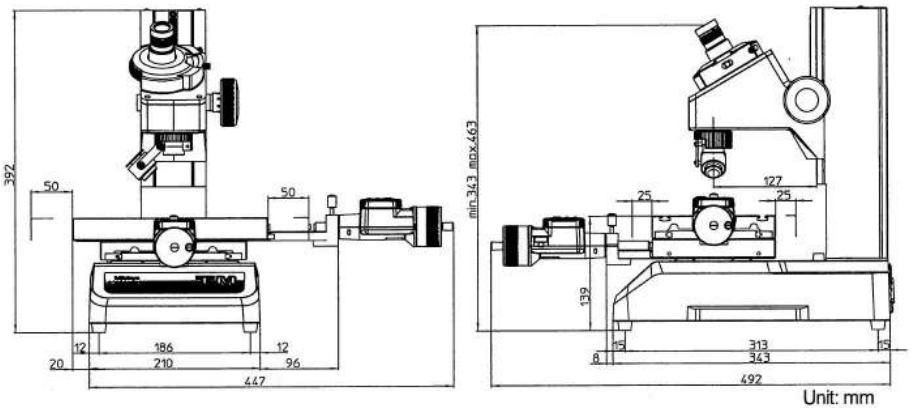

TM-510B

All products to be sold to commercial customers.
Product illustrations are without obligation. Product descriptions, in particular any and all technical specifications, are only binding when explicitly agreed upon.

Accessories for Measuring Microscope TM Generation B

Objectives and Eypieces for TM

Objective Lenses and Eyepieces

Objective Lenses and Eyepieces

No.	Objective lens	Eyepiece 10X (176-115)	Eyepiece 15X (176-116)	Eyepiece 20X (176-117)
176-138	2X (1)	20X (6,5 mm)	30X (6,5 mm)	40X (5 mm)
176-139	5X	50X (2,6 mm)	75X (2,6 mm)	100X (2 mm)
176-137	10X	100X (1,3 mm)	150X (1,3 mm)	200X (1 mm)

(1) Standard accessory
The number in brackets is the diameter of the field of view

176-137

176-138

176-139

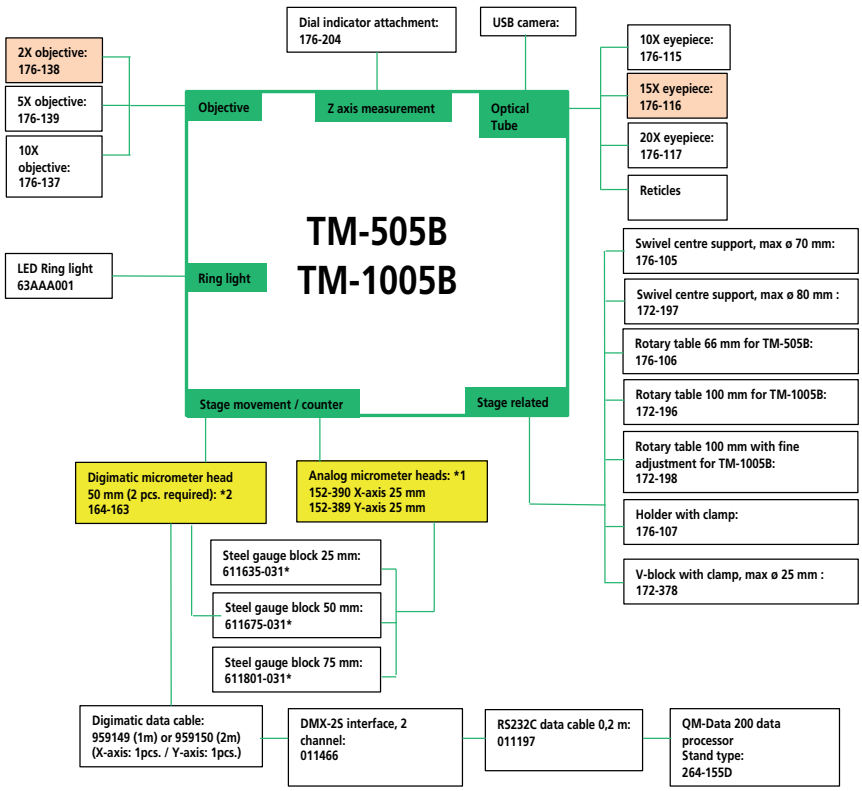

Standard accessory

Necessary option either chose *1 or *2

*** Necessary gauge blocks for extending stage travel range:**

Stage travel range	TM with analog micrometer heads 0-25 mm	TM with digimatic micrometer heads 0-50 mm
Range 25-50 mm	X-axis:611635-031 Y-axis:611635-031	
Range 25-75 mm	X-axis:611675-031	
Range 25-100 mm	X-axis:611801-031	
Range 50-100 mm		X-axis:611675-031

Optional accessories

No.	Description
176-137	Objective Lens for TM 10X
176-115	Eyepiece for TM 10X
152-390	Micrometer Head XY-Stage, Thimble 49mm, 0-25mm, X-Axis
152-389	Micrometer Head XY-Stage, Thimble 49mm, 0-25mm, Y-Axis
63AAA001	LED ring light, for TM-500
176-204	Dial Indicator Attachment, for TM
176-106	Rotary table
172-196	Rotary table, 100 mm for TM-1005B
172-198	Rotary table, 100 mm with fine feed knob for TM-1005B
959150	Digimatic Cable, Straight, Data Button,, 2m
959149	Digimatic Cable, Straight, Data Button,, 1m
176-117	Eyepiece for TM 20X
06AFM380C	USB Input Tool Direct (Digimatic USB), Digi/Digi2, Straight, with Data Button
02AZD790C	U-WAVE-T Connection Cable C, Straight, with Data Button
176-139	Objective Lens for TM 5X
176-105	Fixture/clamping material, Swivel center support
172-197	Rotary Table
611675-031	Gauge Block, Metric, Inspection Cert., ISO, Grade 1, Steel, 50mm
172-378	V-BLOCK, with clamp
176-107	Fixture/clamping material, Holder with clamp
990561	Fixture/clamping material, Workpiece holding clip for 172-Series
164-163	Digital Micrometer Head, 0-50mm, 0,001mm, 18mm Stem
611635-031	Gauge Block, Metric, Inspection Cert., ISO, Grade 1, Steel, 25mm

176-106: for stage 50 x 50 mm
172-196 and 172-198: for stage 100 x 50 mm

152-389

152-390

164-163

63AAA001

All products to be sold to commercial customers.
Product illustrations are without obligation. Product descriptions, in particular any and all technical specifications, are only binding when explicitly agreed upon.

Mitutoyo

Accessories for Measuring Microscope TM Generation B

Reticles for TM

Reticles

Reticles

No.	Remarks
176-109	Metric screw threads (pitch = 0,25 - 1 mm)
176-110	Metric screw threads (pitch = 1,25 - 2 mm)
176-111	Concentric circle (up to ø 4 mm, 0,05 mm increment)
176-112	20° involute gear teeth (normal rack type)
176-114	60° angle
176-123	Unified screw threads (80 - 28TPI)
176-124	Unified screw threads (24 - 14TPI)
176-125	Unified screw threads (13 - 10TPI)
176-126	Cross-hair (standard accessory)
176-140	ISO metric screw threads (0,075 - 0,7 mm)
176-141	ISO metric screw threads (0,75 - 2 mm)

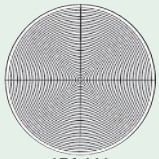
176-111

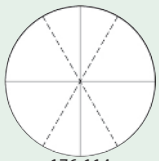
176-114

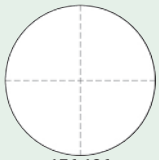
176-126

All products to be sold to commercial customers.
Product illustrations are without obligation. Product descriptions, in particular any and all technical specifications, are only binding when explicitly agreed upon.

Measuring Microscope MF Generation D (Manual, 2- or 3-axis)

Manual MF-A/B Models

MF Generation D Series: Manual models

This versatile measuring microscope, whether you use it to boost the performance with Mitutoyo's vision unit, for data management on a PC or other applications, offers you further improved measuring efficiency.

The MF offers you the following benefits:

- Measuring accuracy that is one of the highest in its class.
- Proven high-NA objectives from the ML optical series (long working distance type).
- Integration of metallurgical and measurement microscope functions enabling you to
- make high-resolution observations and high-accuracy measurements.
- Illumination unit (reflected/transmitted) gives you the option of a high-intensity LED or halogen bulb.
- The variable aperture diaphragm (reflected/ transmitted) allows observation measurement while suppressing light diffraction.
- Variety of standardized stages in sizes up to 400 × 200 mm.
- Quick-release mechanism enabling you to move the stage quickly when measuring
- large or numerous workpieces.
- High-magnification eyepiece observation up to 2000X.
- A good choice of optional accessories, including a Vision Unit, various digital cameras or data management on a PC, promises a wide field of application and excellent measuring

Specifications

Observation image	Erect image
Optical tube	Monocular or binocular tube (depression: 25") Reticle projection method, with TV mount Optical path ratio (eyepiece/TV mount: 50/50)
Eyepiece	10X, 15X, 20X
Indication accuracy (at 20°C)	XY-axis: (2,2+0,02L) µm Z-axis: (5+0,04L) µm L: Measuring length (mm) when not loaded, JIS B 7153
Floating function	X and Y axes with Quick-release mechanism
Power supply	100/110/120/220/240 VAC, 50/60Hz
Objective lens	Standard: 3X Optional: 1X, 5X, 10X, 20X, 50X, 100X

Optional accessories

No.	Description
12AAA643	Illumination Filter ND2
12AAA644	Illumination Filter ND8
176-392	Optical Tube, Monocular
176-393	Optical Tube, Binokular
375-043	Protractor Eyepiece 10X
176-313D	Eyepiece for MF Gen. B, Digital Protractor Type
375-036-2	ML Objective Lens 1X
375-037-1	ML Objective Lens 3X
12AAA645	Illumination Filter GIF
378-866-5	WF 10X/24 Eyepiece single, Wide field of view eyepiece (1 pcs.)
12AAA646	Illumination Filter, LB80
375-054	Camera Adaptor, 0.5X incl. C-Mount
970441	Camera Adaptor, C-Mount
12BAB345	Bulb, Halogen; 12V/50W (2 Pin Fitting)
176-308	Vibration Isolator, Spring Pad
264-155D	2D Data processor, QM-Data 200, stand type
378-866	WF 10X/24 Eyepiece pair, Wide field of view eyepiece (2 pcs.)
375-034-1	ML Objective Lens 5X
375-039	ML Objective Lens 10X
375-051	ML Objective Lens 20X
375-052	ML Objective Lens 50X
176-370-1	Slide Type Nosepiece, Parfocal
176-370-2	Slide Type Nosepiece, w. Magnification Guaranteed
375-053	ML Objective Lens 100X
63AAA066	Mitutoyo MF Package
63AAA355	Invenio 5SCIII camera set, set consists of Invenio USB camera and 0.5X C-mount adapter for MF/MF-U microscopes
12AAJ088	Footswitch
378-858-5	WF 20X/12 Eyepiece single, Wide field of view eyepiece (1 pcs.)
Eyepieces	
378-858	WF 20X/12 Eyepiece pair, Wide field of view eyepiece (2 pcs.)

MF-B2017D

1010D
100x100 mm

2010D
200x100 mm

3017D
300x170 mm

4020D
400x200 mm

All products to be sold to commercial customers.
Product illustrations are without obligation. Product descriptions, in particular any and all technical specifications, are only binding when explicitly agreed upon.

Mitutoyo

Measuring Microscope MF Generation D (Manual, 2- or 3-axis)

MF-A (2 axis)

Model	MF-A1010D	MF-A2010D	MF-A2017D	MF-A3017D	MF-A4020D
No.	**176-861-10**	**176-862-10**	**176-863-10**	**176-864-10**	**176-865-10**
XY stage travel range	100 x 100 mm	200 x 100 mm	200 x 170 mm	300 x 170 mm	400 x 200 mm
Z-axis travel range	150 mm	150 mm	220 mm	220 mm	220 mm
XY stage top size	280 x 280 mm	350 x 280 mm	410 x 342 mm	510 x 342 mm	610 x 342 mm
Max. stage loading [kg]	10	10	20	20	15
Effective glass size	180 x 180 mm	250 x 150 mm	270 x 240 mm	370 x 240 mm	440 x 240 mm
Max. workpiece height	150 mm	150 mm	220 mm	220 mm	220 mm
Z-axis Motor	No	No	No	No	No

MF-B (3 axis)

Model	MF-B1010D	MF-B2010D	MF-B2017D	MF-B3017D	MF-B4020D
No.	**176-866-10**	**176-867-10**	**176-868-10**	**176-869-10**	**176-870-10**
XY stage travel range	100 x 100 mm	200 x 100 mm	200 x 170 mm	300 x 170 mm	400 x 200 mm
Z-axis travel range	150 mm	150 mm	220 mm	220 mm	220 mm
XY stage top size	280 x 280 mm	350 x 280 mm	410 x 342 mm	510 x 342 mm	610 x 342 mm
Max. stage loading [kg]	10	10	20	20	15
Effective glass size	180 x 180 mm	250 x 150 mm	270 x 240 mm	370 x 240 mm	440 x 240 mm
Max. workpiece height	150 mm	150 mm	220 mm	220 mm	220 mm
Z-axis Motor	No	No	No	No	No

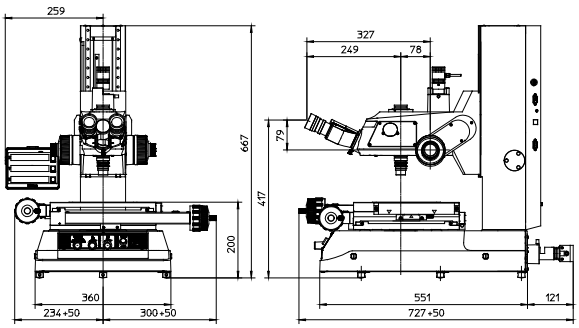

1010D

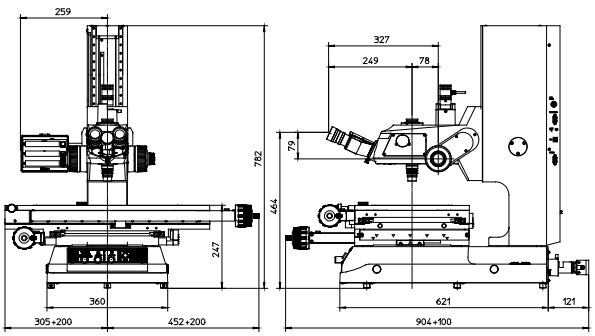

4020D

QM-Data 200

Invenio digital camera (63AAA058) with
0.5X C-mount adapter (63AAA067) for advanced observations

Vision Unit
PC-based vision measuring system

Using optional slide type nosepiece with 2-lens mount (factory-fit option)

176-392
Optional monocular

176-393
Optional binocular

Refer to the MF / MF-U microscopes brochure

All products to be sold to commercial customers.
Product illustrations are without obligation. Product descriptions, in particular any and all technical specifications, are only binding when explicitly agreed upon.

Measuring Microscope MF Generation D (Z-axis Motor Drive)

Specifications

Observation image	Erect image
Optical tube	Monocular or binocular tube (depression: 25"), Reticle projection method, with TV mount, Optical path ratio (eyepiece/TV mount: 50/50)
Eyepiece	10X, 15X, 20X
Indication accuracy (at 20°C)	XY-axis: (2,2+0,02L) µm Z-axis: (5+0,04L) µm L: Measuring length (mm) when not loaded, JIS B 7153
Floating function	X and Y axes with Quick-release mechanism
Power supply	100/110/120/220/240 VAC, 50/60Hz
Objective lens	Standard: 3X Optional: 1X, 5X, 10X, 20X, 50X, 100X
Remote Box	- Speed adjustment - Coarse/Fine Speed switching - Jog shuttle - Emergency stop switch - AF button - Counter reset button - Data output button - Power switch - Limit setting (Z-axis) Remote Box

Motor-Driven Z-axis MF-J Models

MF Generation D Series: Models with motorized Z-axis movement
The MF Generation D version with a motorized Z-axis. This feature renders fast and accurate Auto Focus possible when used in combination with the optional Vision Unit. The MF with motorized Z-axis is available in 3 stage sizes and incorporates all the functionality of the standard MF Generation D series.

The MF Generation D with motorized Z-axis offers the following benefits:
- Auto Focus function when using the optional Vision Unit.
- A measuring accuracy that is one of the highest in its class.
- Proven high-NA objectives (long working distance type).
- Integration of metallurgical and measurement microscope functions enabling you to make high-resolution observations and high-accuracy measurements.
- Illumination unit (reflected/transmitted) offers the option of a high-intensity LED or halogen bulb.
- The variable aperture diaphragm (reflected/ transmitted) allows observation measurement while suppressing light diffraction.
- Variety of 3 standardized stages in sizes up to 400 × 200 mm.
- Quick-release mechanism enabling you to move the stage quickly when measuring large or numerous workpieces.
- High-magnification eyepiece observation up to 2000X.
- A large lineup of optional accessories, including a Vision Unit, various digital cameras and data management for a PC, grants a wide field of applications and excellent measuring efficiency.

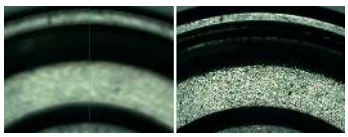

Screen image before and after Auto Focus*
*** When using optional Vision Unit**

MF-J2017D

All products to be sold to commercial customers.
Product illustrations are without obligation. Product descriptions, in particular any and all technical specifications, are only binding when explicitly agreed upon.

Mitutoyo

Measuring Microscope MF Generation D (Z-axis Motor Drive)

No.	Model	XY stage travel range	XY stage top size	Max. stage loading [[kg]]
176-891D	MF-J2017D	200 x 170 mm	410 x 342 mm	20
176-892D	MF-J3017D	300 x 170 mm	510 x 342 mm	20
176-893D	MF-J4020D	400 x 200 mm	610 x 342 mm	15

Vision Unit
PC-based vision measuring system

Digital camera for MF / MF-U microscopes (63AAA355) - the Set consists of:

- **Invenio 5SCIII, 5 megapixel colour camera with high speed USB3 communication (63AAA058)**
- **0.5X C-mount adapter for advanced observations (63AAA067)**

Also included is the Mitutoyo MF software package (63AAA066), which enhances the functionality of the microscope with:

- **Reporting functionality of images and measurement results**
- **Images with extended depth of focus**
- **3D topography observation by stacking images in Z-direction**
- **Counting of particles**

Optional accessories

No.	Description
63AAA058	Invenio 5SCIII Camera with 5 Megapixel and CMOS sensor, 5M pixel, USB3, 15 FPS
63AAA066	Mitutoyo MF Package
63AAA355	Invenio 5SCIII camera set, set consists of Invenio USB camera and 0.5X C-mount adapter for MF/MF-U microscopes
264-155D	2D Data processor, QM-Data 200, stand type
970441	Camera Adaptor, C-Mount
12BAB345	Bulb, Halogen; 12V/50W (2 Pin Fitting)
176-308	Vibration Isolator, Spring Pad
176-370-2	Slide Type Nosepiece, w. Magnification Guaranteed
63AAA067	0,5x camera adapter with C-mount for MF/MF-U microscope
12AAJ088	Footswitch
378-858-5	WF 20X/12 Eyepiece single, Wide field of view eyepiece (1 pcs.)
Eyepieces	
378-857	Eyepiece, 15X/16
176-392	Optical Tube, Monocular
176-393	Optical Tube, Binokular
375-043	Protractor Eyepiece 10X
176-313D	Eyepiece for MF Gen. B, Digital Protractor Type
378-856	Eyepiece, 10X/24
378-858	WF 20X/12 Eyepiece pair, Wide field of view eyepiece (2 pcs.)
Filters	
12AAA643	Illumination Filter ND2
12AAA644	Illumination Filter ND8
12AAA645	Illumination Filter GIF
12AAA646	Illumination Filter, LB80
Mounts	
375-054	Camera Adaptor, 0.5X incl. C-Mount
176-370-1	Slide Type Nosepiece, Parfocal
Objective Lenses	
375-036-2	ML Objective Lens 1X
375-037-1	ML Objective Lens 3X
375-034-1	ML Objective Lens 5X
375-039	ML Objective Lens 10X
375-051	ML Objective Lens 20X
375-052	ML Objective Lens 50X
375-053	ML Objective Lens 100X

Refer to the MF / MF-U microscopes brochure

All products to be sold to commercial customers.
Product illustrations are without obligation. Product descriptions, in particular any and all technical specifications, are only binding when explicitly agreed upon.

Accessories for Measuring Microscopes MF Series

Optional accessories

No.	Description
176-305	Rotary Table, Type A, D=240 mm
176-306	Illumination Unit, Type B, D=270 mm
176-107	Fixture/clamping material, Holder with clamp
172-197	Rotary Table
172-378	V-BLOCK, with clamp
172-198	Rotary table, 100 mm with fine feed knob for TM-1005B
12AAA807D	Cable RS-232C 2m Null Modem Type, Crossed Type
12AAG806	Illumination Filter LB80
12AAG807	Fixture/clamping material
12AAJ088	Footswitch
Eyepieces	
378-856	Eyepiece, 10X/24
Lighting	
176-343D	Illumination Filter GIF, for MF, MF-U
176-367-2D	Ringlight LED
176-351-6	Oblique Surface Illumination for MF
Lighting (required option)	
176-445D	Illumination Unit LED
176-447D	Illumination Unit, Halogen
Reticles	
12AAG838	Reticle for MF, Broken Cross-hair (7 µm line width)
12AAG836	Reticle for MF, Broken Cross-hair (5 µm line width)
12AAG873	Reticle for MF, Broken Cross-hair (3 µm line width)
12AAG840	Reticle for MF, Cross-hair and 60° Broken Lines
12AAG842	Reticle for MF, Cross-hair 20 mm scale (0,1 Reading)
12AAG843	Reticle for MF, Concentric Circles (1,2-18 mm)
12AAG844	Reticle for MF Gen. B, Scale 10 mm (0,1 mm Reading)
12AAG839	Reticle for MF, Cross-hair and 45° Broken Lines

Accessories/system diagram system for MF manual and motorized Z-axis models

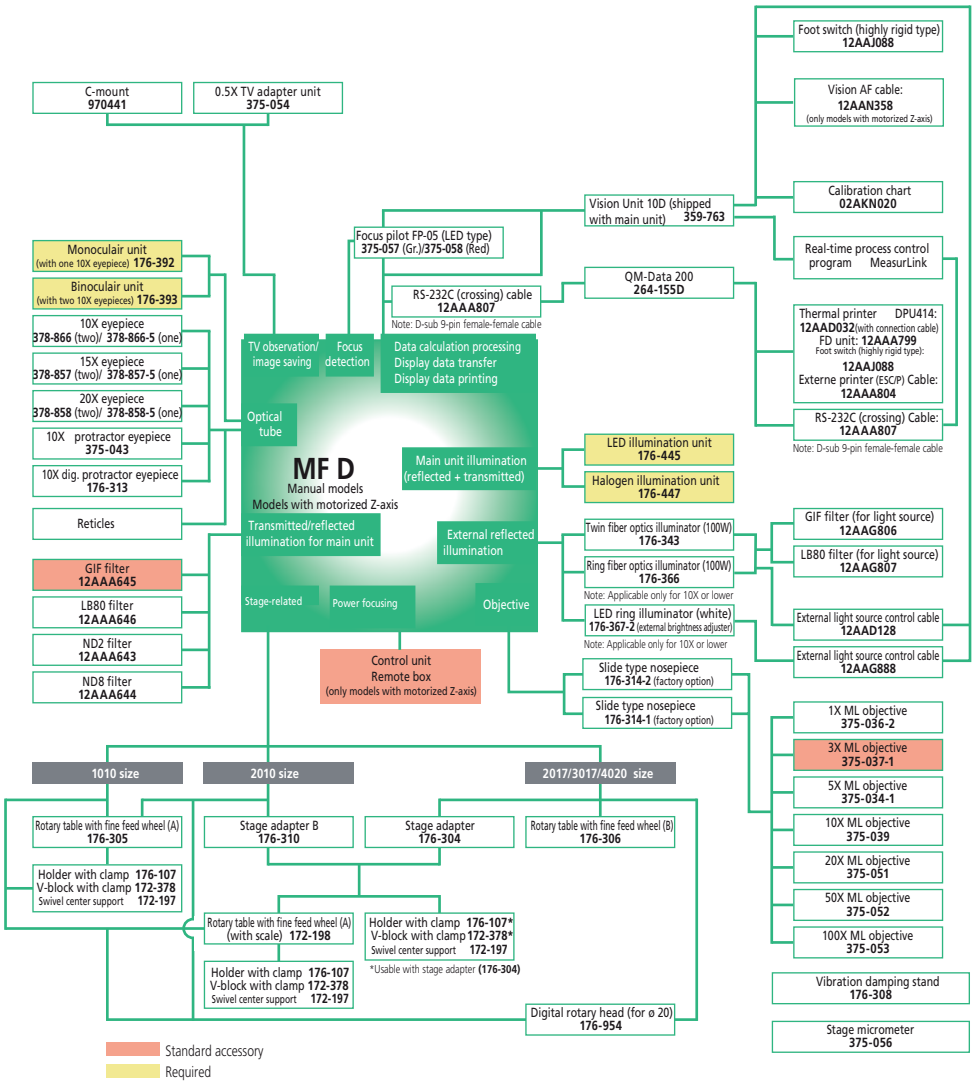

All products to be sold to commercial customers.
Product illustrations are without obligation. Product descriptions, in particular any and all technical specifications, are only binding when explicitly agreed upon.

Mitutoyo

Measuring Microscope MF-U Generation D (Manual, 2- or 3-axis)

MF-U Generation D Series: Manual models

This high-power multi-function measuring microscope gives you detailed observation with a clear and flare-less erect image and a wide field of view.

The MF-U offers you the following benefits:

- Measuring accuracy that is one of the highest in its class.
- Proven high-NA objectives from the FS optical system (long working distance type).
- Integration of metallurgical and measurement microscope functions enabling you to make high-resolution observations and high-accuracy measurements.
- Illumination unit (reflected/transmitted) gives you the option of a high-intensity LED or halogen bulb.
- The variable aperture diaphragm (reflected/ transmitted) allows observation measurement while suppressing light diffraction.
- Variety of standardized stages in sizes up to 400 × 200 mm.
- Quick-release mechanism enabling you to move the stage quickly when measuring large or numerous workpieces.
- High-magnification eyepiece observation up to 2000X.
- A good choice of optional accessories, including a Vision Unit, various digital cameras or data management on a PC, promises a wide field of application and excellent measuring efficiency.

MF-UB 3017D
(turret, objectives and illumination are optional)

Optional 5 positions motorized turret

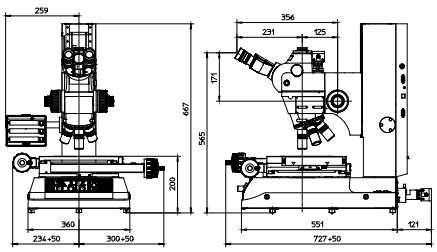

1010D

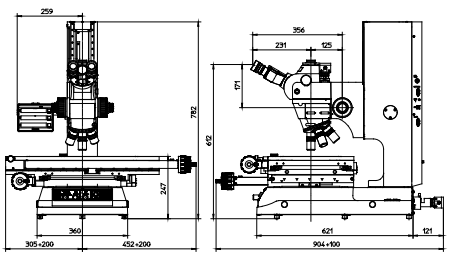

4020D

Specifications

Observation image	Erect image
Optical tube	Siedentoph type (pupil distance adjustment: 51 - 76 mm), 1X tube lens, Binocular tube (depression: 30°), Reticle projection method, with TV mount, Optical path ratio (eyepiece/TV mount: 50/50)
Indication accuracy (at 20°C)	XY-axis: (2,2+0,02L) µm Z-axis: (5+0,04L) µm L: Measuring length (mm) when not loaded, JIS B 7153
Floating function	X and Y axes with Quick-release mechanism

All products to be sold to commercial customers.
Product illustrations are without obligation. Product descriptions, in particular any and all technical specifications, are only binding when explicitly agreed upon.

Measuring Microscope MF-U Generation D (Manual, 2- or 3-axis)

Optional accessories

No.	Description
172-378	V-BLOCK, with clamp
176-107	Fixture/clamping material, Holder with clamp
172-197	Rotary Table
375-054	Camera Adaptor, 0.5X incl. C-Mount
970441	Camera Adaptor, C-Mount
176-305	Rotary Table, Type A, D=240 mm
176-306	Illumination Unit, Type B, D=270 mm
264-155D	2D Data processor, QM-Data 200, stand type
Bulbs	
12BAB345	Bulb, Halogen; 12V/50W (2 Pin Fitting)
517181	Bulb, Halogen, 12V/100W
12BAD602	Illumination Unit, Halogen; 12V/100W
DIC Units	
378-076	DIC Unit, 100X, SL80X, SL50X
378-078	DIC Unit 20X, 50X, SL20X
378-079	DIC Unit
378-080	DIC Unit for 5X and 10x, 5X, 10X
Eyepieces	
378-858	WF 20X/12 Eyepiece pair, Wide field of view eyepiece (2 pcs.)
378-858-5	WF 20X/12 Eyepiece single, Wide field of view eyepiece (1 pcs.)
378-857	Eyepiece, 15X/16
378-866-5	WF 10X/24 Eyepiece single, Wide field of view eyepiece (1 pcs.)
378-866	WF 10X/24 Eyepiece pair, Wide field of view eyepiece (2 pcs.)
Filters	
12AAA644	Illumination Filter ND8
12AAA643	Illumination Filter ND2
12AAA645	Illumination Filter GIF
12AAA646	Illumination Filter, LB80
12AAG806	Illumination Filter LB80
12AAG807	Fixture/clamping material
Invenio 5SCIII camera	
63AAA355	Invenio 5SCIII camera set, set consists of Invenio USB camera and 0.5X C-mount adapter for MF/MF-U microscopes
12AAJ088	Footswitch
Lighting (required option)	
176-343D	Illumination Filter GIF, for MF, MF-U
176-315D	Illumination Unit, 100W Fiber Optic
176-316D	Reticle for MF-U Gen. B, 150 W Fiber Optic
176-448D	Illumination Unit, Halogen, Halogen
Reticles	
12AAG876	Reticle for MF-U Gen. B, Broken Cross-hair (3 µm line width)
12AAG877	Reticle for MF-U Gen. B, Broken Cross-hair (5 µm line width)
12AAG878	Reticle for MF-U Gen. B, Broken Cross-hair (7 µm line width)
12AAG879	Reticle for MF-U Gen. B, Cross-hair and 45° Broken Lines
12AAG880	Reticle for MF-U Gen. B, Cross-hair and 60° Broken Lines
12AAG881	Fixture/clamping material Swivel center support, Zeiss Type Pattern
Stands	
176-308	Vibration Isolator, Spring Pad

Bright/Dark Field (BF/DF)

No.	Model	XY stage travel range	Z-axis travel range	XY stage top size	Max. workpiece height	Swiveling function (left)
176-881-10	MF-UC1010D	100 x 100 mm	150 mm	280 x 280 mm	150 mm	
176-882-10	MF-UC2010D	200 x 100 mm	150 mm	350 x 280 mm	150 mm	
176-883-10	MF-UC2017D	200 x 170 mm	220 mm	410 x 342 mm	220 mm	±5°
176-884-10	MF-UC3017D	300 x 170 mm	220 mm	510 x 342 mm	220 mm	±5°
176-885-10	MF-UC4020D	400 x 200 mm	220 mm	610 x 342 mm	220 mm	±3°
176-886-10	MF-UD1010D	100 x 100 mm	150 mm	280 x 280 mm	150 mm	
176-887-10	MF-UD2010D	200 x 100 mm	150 mm	350 x 280 mm	150 mm	
176-888-10	MF-UD2017D	200 x 170 mm	220 mm	410 x 342 mm	220 mm	±5°
176-889-10	MF-UD3017D	300 x 170 mm	220 mm	510 x 342 mm	220 mm	±5°
176-890-10	MF-UD4020D	400 x 200 mm	220 mm	610 x 342 mm	220 mm	±3°

Bright Field (BF)

No.	Model	XY stage travel range	Z-axis travel range	XY stage top size	Max. workpiece height	Swiveling function (left)
176-871-10	MF-UA1010D	100 x 100 mm	150 mm	280 x 280 mm	150 mm	
176-872-10	MF-UA2010D	200 x 100 mm	150 mm	350 x 280 mm	150 mm	
176-873-10	MF-UA2017D	200 x 170 mm	220 mm	410 x 342 mm	220 mm	±5°
176-874-10	MF-UA3017D	300 x 170 mm	220 mm	510 x 342 mm	220 mm	±5°
176-875-10	MF-UA4020D	400 x 200 mm	220 mm	610 x 342 mm	220 mm	±3°
176-876-10	MF-UB1010D	100 x 100 mm	150 mm	280 x 280 mm	150 mm	
176-877-10	MF-UB2010D	200 x 100 mm	150 mm	350 x 280 mm	150 mm	
176-878-10	MF-UB2017D	200 x 170 mm	220 mm	410 x 342 mm	220 mm	±5°
176-879-10	MF-UB3017D	300 x 170 mm	220 mm	510 x 342 mm	220 mm	±5°
176-880-10	MF-UB4020D	400 x 200 mm	220 mm	610 x 342 mm	220 mm	±3°

Model 1010D

Model 2010D

Model 2017D

Model 3017D

Model 4020D

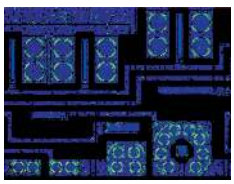

Polarized light

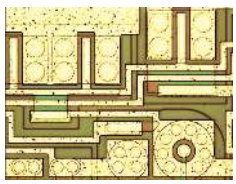

Bright field

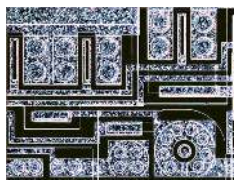

Dark field

Refer to the MF / MF-U microscopes brochure

All products to be sold to commercial customers.
Product illustrations are without obligation. Product descriptions, in particular any and all technical specifications, are only binding when explicitly agreed upon.

Mitutoyo

Measuring Microscope MF-U Generation D Series

Motor-Driven Z-axis MF-UJ Models (Bright/Dark Field)

Motor-driven models allows in combination with optional Vision Unit ultra-high speed auto focus function

The ultra-high speed AF function has been installed to allow focusing on a surface to be measured at a speed of about one second. Freedom from burdensome focus adjustment even on a work-piece with many asperities allows the operator to perform stress-free measurement, drastically reducing operator's fatigue

No.	Model	XY stage travel range	XY stage top size	Max. stage loading [[kg]]	Effective glass size	Swiveling function (left)
176-897D	MF-UK2017D	200 x 170 mm	410 x 342 mm	20	270 x 240 mm	±5° (left)
176-898D	MF-UK3017D	300 x 170 mm	510 x 342 mm	20	370 x 240 mm	±5° (left)
176-899D	MF-UK4020D	400 x 200 mm	610 x 342 mm	15	440 x 240 mm	±3° (left)

Optional accessories

No.	Description
12AAG876	Reticle for MF-U Gen. B, Broken Cross-hair (3 µm line width)
12AAG877	Reticle for MF-U Gen. B, Broken Cross-hair (5 µm line width)
12AAG878	Reticle for MF-U Gen. B, Broken Cross-hair (7 µm line width)
12AAG879	Reticle for MF-U Gen. B, Cross-hair and 45° Broken Lines
12AAG880	Reticle for MF-U Gen. B, Cross-hair and 60° Broken Lines
12AAG881	Fixture/clamping material Swivel center support, Zeiss Type Pattern
375-054	Camera Adaptor, 0.5X incl. C-Mount
970441	Camera Adaptor, C-Mount
176-305	Rotary Table, Type A, D=240 mm
176-306	Illumination Unit, Type B, D=270 mm
12AAJ088	Footswitch
264-155D	2D Data processor, QM-Data 200, stand type
172-197	Rotary Table
176-107	Fixture/clamping material, Holder with clamp
172-378	V-BLOCK, with clamp
Bulbs	
12BAB345	Bulb, Halogen; 12V/50W (2 Pin Fitting)
517181	Bulb, Halogen, 12V/100W
12BAD602	Illumination Unit, Halogen; 12V/100W
DIC Units	
378-076	DIC Unit, 100X, SL80X, SL50X
378-078	DIC Unit 20X, 50X, SL20X
378-079	DIC Unit
378-080	DIC Unit for 5X and 10x, 5X, 10X
Eyepieces	
378-858	WF 20X/12 Eyepiece pair, Wide field of view eyepiece (2 pcs.)
Eyepieces	
378-857	Eyepiece, 15X/16
Filters	
12AAA643	Illumination Filter ND2
12AAA644	Illumination Filter ND8
12AAG807	Fixture/clamping material
Filters	
12AAA645	Illumination Filter GIF
Filters	
12AAA646	Illumination Filter, LB80
Filters	
12AAG806	Illumination Filter LB80
Lighting	
176-343D	Illumination Filter GIF, for MF, MF-U
176-315D	Illumination Unit, 100W Fiber Optic
176-316D	Reticle for MF-U Gen. B, 150 W Fiber Optic
176-448D	Illumination Unit, Halogen, Halogen
Stands	
176-308	Vibration Isolator, Spring Pad

All products to be sold to commercial customers.
Product illustrations are without obligation. Product descriptions, in particular any and all technical specifications, are only binding when explicitly agreed upon.

Optional Light Sources for Measuring Microscopes MF/MF-U Generation D

Twin Fiber Illumination

Fibre-optic Ring Light

LED Ring Light

Dual Swan-neck Light-pipe

LED Ring Light
(for M Plan objectives)

Fibre-optic Ring Light

LED Ring Light

No.	Model	Applicable Microscope	Length of fibre cable	Light source
176-343D	Dual Swan-neck Light-pipe illuminator	MF, MF-U models	700 mm	Halogen bulb (12V, 100W) (517181: halogen bulb)
176-366CED	Fibre-optic Ring Light	MF models	1000 mm	Halogen bulb (12V, 100W) (517181: halogen bulb)
176-367-2D	LED Ring Light	MF models with 1X, 3X, 5X, 10X objective	1500 mm	White LED

All products to be sold to commercial customers.
Product illustrations are without obligation. Product descriptions, in particular any and all technical specifications, are only binding when explicitly agreed upon.

Mitutoyo

Measuring Microscope Hyper MF/MF-U Generation B Series

This measuring microscope has one of the highest XY measuring accuracies at 0,9+3L/1000 µm.
The Hyper MF-B/MF-UB offers you the following benefits:

- One of the highest XY measuring accuracies in the world (0,9+3L/1000)[1] µm
- Selectable LAF (Laser Auto Focus) function.
- High operability and repeatability.
- Three-axis motorized control.
- You are offered the power-drive auto focus unit as standard.
- A range of useful fixtures is available that includes a wafer holder and swivel-centre support.

1. (**L** = measured length (mm) in XY plane, stage unloaded).

Hyper MF-UF2515B
with optional turret and objective lenses

Measuring unit: Linear encoder
Resolution: 0,01 µm
Max. workpiece height: 150 mm

Model	Hyper MF-B2515B	Hyper MF-UB2515B	Hyper MF-UD2515B	Hyper MF-UE2515B	Hyper MF-UF2515B
No.	**176-430D**	**176-431D**	**176-432D**	**176-433D**	**176-434D**
Laser auto focus function	-	-	-	Available	Available
Measuring unit	Linear encoder	Linear encoder	Linear encoder	Linear encoder	Linear encoder
Effective glass size	300 x 200 mm	300 x 200 mm	300 x 200 mm	300 x 200 mm	300 x 200 mm
Observation type	Bright Field	Bright Field	Bright Field or Bright Field/Dark Field	Bright Field	Bright Field or Bright Field/Dark Field
Mass	14 kg (power unit) **Hyper MF**: 250 kg (main unit) **Hyper MF-U**: 255 kg (main unit)	14 kg (power unit) **Hyper MF**: 250 kg (main unit) **Hyper MF-U**: 255 kg (main unit)	14 kg (power unit) **Hyper MF**: 250 kg (main unit) **Hyper MF-U**: 255 kg (main unit)	14 kg (power unit) **Hyper MF**: 250 kg (main unit) **Hyper MF-U**: 255 kg (main unit)	14 kg (power unit) **Hyper MF**: 250 kg (main unit) **Hyper MF-U**: 255 kg (main unit)

Control panel for fast traverse and three-axis positioning

Laser Auto Focus Optical Tube

Specifications

Observation image	Erect image
Optical tube	Reticle projection method, with TV mount, Optical path ratio **Hyper MF**: Monocular or binocular tube (optional depression: 25°) **Hyper MF-U**: Siedentoph type (pupil distance adjustment: 51 - 76 mm), 1X tube lens, Binocular tube (depression: 25°)
Turret (optional)	**Hyper MF-U**: Motorized Objective (optional): M / BD Plan Apo objective from 1X to 100X
Eyepiece	**Hyper MF**: Optional 10X, 15X, 20X **Hyper MF-U**: 10X (field No.: 24 mm), Optional: 15X, 20X
Transmitted illumination	Light source: Halogen bulb (12V, 100W)**(fiber-optic cold light illumination)** **Optical system: Telecentric illumination with adjustable aperture diaphragms** **Functions: Light intensity adjustable, 100 steps brightness adjustment**
Surface illumination	Light source: Halogen bulb (12V, 50W) Optical system: Koehler illumination with adjustable aperture diaphragms Functions: Light intensity adjustable, 100 steps brightness adjustment
Data output	Via RS-232C interface
Power supply	220/240V AC, 50/60 Hz
Optional Accessories	See MF accessories for Hyper MF or MF-U models
Dimensions (WxDxH)	160 x 476 x 381 mm (power unit) **Hyper MF**: 880 x 913 x 730 mm (main unit) **Hyper MF-U**: 880 x 913 x 770 mm (main unit) mm

Optional accessories

No.	Description
378-866-5	WF 10X/24 Eyepiece single, Wide field of view eyepiece (1 pcs.)
378-866	WF 10X/24 Eyepiece pair, Wide field of view eyepiece (2 pcs.)
378-858	WF 20X/12 Eyepiece pair, Wide field of view eyepiece (2 pcs.)
378-858-5	WF 20X/12 Eyepiece single, Wide field of view eyepiece (1 pcs.)

Refer to the Hyper MF / MF-U brochure

All products to be sold to commercial customers.
Product illustrations are without obligation. Product descriptions, in particular any and all technical specifications, are only binding when explicitly agreed upon.

Measuring Microscope Hyper MF/MF-U Generation B Series

Optional accessories

No.	Description
264-159D	2D Data processor, QM-Data 200 for Hyper MF

See MF accessories for Hyper MF models or MF-U accessories for Hyper MF-U models

mm

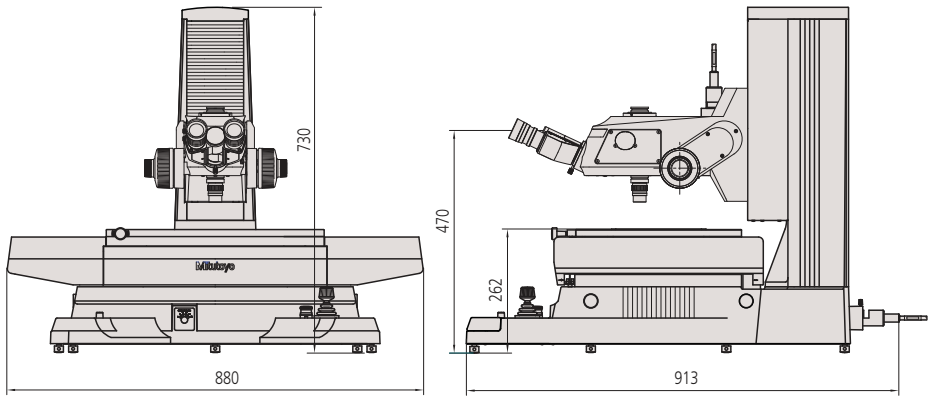

Hyper MF-B2515B

mm

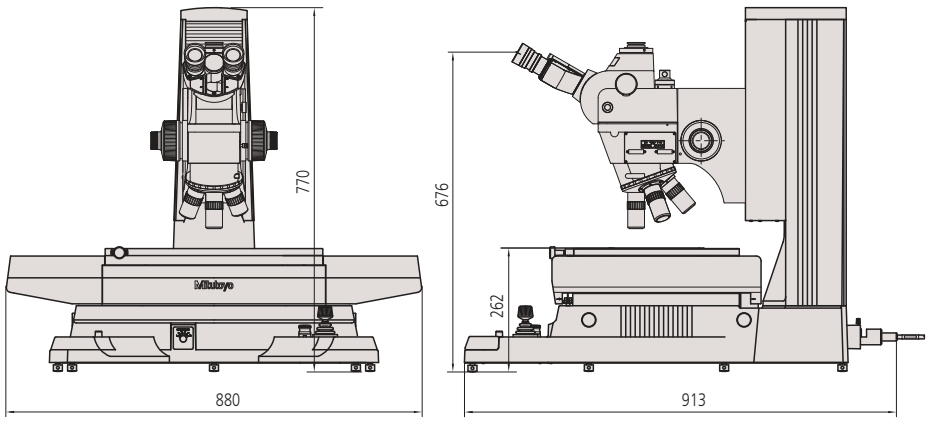

Hyper MF-UB2515B

QM-Data 200
2-D data processing unit

Vision Unit
PC-based vision measuring system

All products to be sold to commercial customers.
Product illustrations are without obligation. Product descriptions, in particular any and all technical specifications, are only binding when explicitly agreed upon.

Vision Unit

This vision system retrofit for microscopes allows you to complete your measurement in one easy step with its automatic edge-detection tools and various macro icons.
The Vision Unit offers you the following benefits:

- Easy operation due to the graphics and measurement navigation functions.
- Image data input/storage function.
- Measurement results are output to Microsoft® Excel®; this lets you generate an inspection table on the same computer.
- The unit allows you to verify that measurement results are within the tolerance zones and to carry out various types of statistical processing for each item.
- Combined use with the focus pilot gives you high accuracy in height measurements (patent pending).
- You can perform a series of measuring operations using just one screen display.
- The auto-brightness control function reproduces type and degree of illumination used.

The PC system, QSPAK VUE software and microscope are optional.

No.	Model	Description
359-763	Vision Unit 10D	For MF / MF-U generation D manual and motorized models
359-727	Vision Unt 9D	For MF generation C
359-729	Vision Unit 9UD	For MF-U generation C
359-717	Vision Unit 8D	For MF generation B
359-719	Vision Unit 8UD	For MF-U generation B
359-779	Vision Unit 7D	For Hyper MF / Hyper MF-U generation B
359-707	Vision Unit 6D	For MF generation A
359-709	Vision Unit 6UD	For MF-U generation A

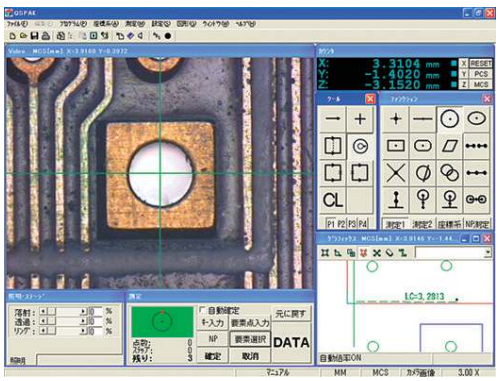

QSPAK VUE Measurement Window

Specifications

Projected image	Inverted
Camera unit	Image sensor: 1/2" / **12,7 mm** color CMOS camera Dimensions: 100 x 58 x 89 mm (W x D x H) Mass: 0,4 kg
Adapter unit	Operating software: QSPAK VUE (optional) Dimensions: 45 x 123 mm Magnification: 0,5X Mass: 0,3 kg
Magnification	19X - 1900X on 22" / **56 cm** monitor (image resizable)
QSPAK VUE, optional software	**For observation/comparison of form** - Template matching function - Manual pattern matching function **For simple measurement** - One-click edge detection tool function - Smart tool function - User macro function **Functions for repeated measurement/auto-measurement** - Quick navigation - Playback - Graphic - External data output - Statistical calculation

Standard accessories

No.	Description
12AAJ088	Footswitch

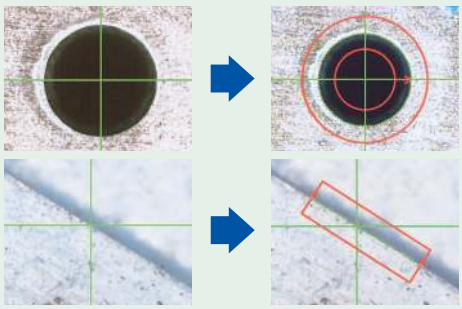

One-click Edge Detection
Just by clicking the mouse near the edge of a workpiece, QSPAK automatically scans the edge and detects it, showing its coordinates. This function also works with the point tool, box tool, circle tool and auto-focus tool.

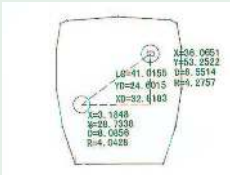

Graphic Window
The measurement results and measured elements are plotted in the graphic window in real-time. By using this function the user can check the current measuring position at a glance. The graphic window can be used for geometrical calculations.

All products to be sold to commercial customers.
Product illustrations are without obligation. Product descriptions, in particular any and all technical specifications, are only binding when explicitly agreed upon.

Eyepieces for Measuring Microscopes

Optional accessories

No.	Description
516848	Reticle, Cross hair
516576	Reticle, Broken Cross hair and 60° Angle
516578	Reticle, Concentric Circles
516577	Reticle, Cross hair with 20 mm Scale
516849	Reticle, 10 mm Scale (0,01 mm reading)
516850	Reticle, 5 mm Scale (0,005 mm reading)

Refer to the microscope units and objective lenses brochure

- Extra-wide field of view type.
- Optional reticles are available.
- Applicable microscope models: MF-C, MF-UC, Hyper MF, Hyper MF-U, FS70.

378-866-5

378-858-5

No.	Model	Remarks	Magnification	Field number [mm]	Visibility Adjustment	Mass [g]
378-866	WF10X/24	Set of pair	10X	24	-10 D to +5 D	150
378-866-5	WF10X/24	Single	10X	24	-10 D to +5 D	75
378-858	WF20X/12	Set of pair	20X	12	-8 D to +5 D	110
378-858-5	WF20X/12	Single	20X	12	-8 D to +5 D	55

All products to be sold to commercial customers.
Product illustrations are without obligation. Product descriptions, in particular any and all technical specifications, are only binding when explicitly agreed upon.

Mitutoyo

Video Microscope Unit VMU Series

VMU

The VMU is a compact, lightweight and easy-to-install microscope unit for CCD camera monitoring in semiconductor fabrication facilities.
The VMU offers you the following benefits:

- The optical system features ultra-long working distance objectives and correction for the wide range of radiation wavelengths in use.
- Reflected illumination keeps your workpiece free from thermal expansion (the fibreoptic illuminator is required.)
- Also available with a laser mount or turret (objective mount).
- The objective is optional.

VMU-V
378-505

VMU-H
378-506

VMU-LB
378-513

VMU-L4B
378-514

Selection Guide to System Configuration
(Depends on each system configuration)

No.	Applicable Wavelength	Vertical camera C-mount	Horizontal camera C-mount	YAG laser mount	Fibre optic illumination unit mount	Mass [g]
378-505	Near-infrared and visible radiation	Yes			Yes	570
378-506	Near-infrared and visible radiation		Yes		Yes	590
378-513	Near-infrared, visible, near-ultraviolet radiation	Yes		Yes	Yes	1270
378-514	Near infrared, visible, near ultraviolet and ultraviolet radiation	Yes		Yes	Yes	1300

Specifications

Magnification of tube	1X
Reflected illumination	- Telecentric system with aperture stop system - Fibre-optic illuminator (optional) is required
Light source	Halogen bulb (21V, 150W) (optional)
Objective lenses for bright field observation (Optional accessory)	M Plan Apo, M Plan Apo SL, G Plan Apo
Objective lenses for laser cutting (Optional accessory)	M plan Apo NIR, LCD Plan Apo NIR, M Plan Apo NUV and LCD Plan Apo NUV
Objective lenses for laser machining (Optional accessory)	M Plan UV **(for 378-514 only)**

Refer to the microscope units and objective lenses brochure

All products to be sold to commercial customers.
Product illustrations are without obligation. Product descriptions, in particular any and all technical specifications, are only binding when explicitly agreed upon.

Video Microscope Unit VMU Series

Refer to the microscope units and objective lenses brochure

WIDE VMU

The WIDE VMU series takes video microscopy to the next level with a 7 times bigger field of view than conventional models. It supports both bright field and dark field observation.

The WIDE VMU offers the following benefits:

- Supported sensor size of 2-inch-equivalent, APS-C format
- Image field of ø30 mm with 1X tube lens
- Both F-mount and C-mount cameras can be mounted
- Bright field (BF) observations are supported by the WIDE VMU-V and -H models ,
- Bright field/Dark field (BD) observations are supported by the WIDE VMU-BDV and -BDH models
- With the flexible orientation for camera and illumination mounting very compact arrangements can be configured.
- The objective is optional.

WIDE VMU-HR

WIDE VMU-BDV

WIDE VMU-BDH

Highly compact configuration of 4 WIDE VMU units

No.	Camera mount	Observation type	Illumination mount	Suitable objectives
378-517	Vertical	Bright field / Dark field (BD)	Dual port	BD Plan Apo, BD Plan Apo HR, BD Plan Apo SL
378-518	Horizontal	Bright field / Dark field (BD)	Dual port	BD Plan Apo, BD Plan Apo HR, BD Plan Apo SL
378-519	Vertical	Bright field (BF)	Single port	M Plan Apo, M Plan Apo HR, M Plan Apo SL, G Plan Apo

Optional accessories: Motorized turret, focusing unit, polarizer

All products to be sold to commercial customers.
Product illustrations are without obligation. Product descriptions, in particular any and all technical specifications, are only binding when explicitly agreed upon.

Mitutoyo

Finity Corrected Objectives for ML-Series

The Mitutoyo 375 Series finity corrected objective lenses realize clear images and long working distance.

375-036-2

375-037-1

375-034-1

375-039

375-051

375-052

375-053

No.	Magnification	N.A.	W.D. [mm]	R [µm]	D.F. [µm]	Mass [g]
375-036-2	1x	0,03	61	9,2	306	80
375-037-1	3x	0,09	77	3,06	34	55
375-034-1	5x	0,13	61	2,12	23	75
375-039	10x	0,21	51	1,31	6,2	125
375-051	20X	0,42	20	0,65	1,6	310
375-052	50x	0,55	10	0,5	0,9	350
375-053	100x	0,7	5	0,4	0,6	380

Specifications

Abbreviations in product table	Mag.: Magnification N.A.: Numerical aperture W.D.: Working distance P.D.: Parfocal distance f: Focal distance R: Resolving power D.F.: Depth of field FOV 1: Field of view when using ø24 mm eyepiece FOV 2: Field of view when using a digital camera with 1/2" chip size

All products to be sold to commercial customers.
Product illustrations are without obligation. Product descriptions, in particular any and all technical specifications, are only binding when explicitly agreed upon.

Objectives for M Plan Series

The Mitutoyo 378 Series objectives have one of the world's longest working distances and an infinitycorrection optical system. These objectives give you flexible observation at high magnifications and independent correction of chromatic aberration.

Specifications

Features

- The long working distance type objective lenses provide excellent clearance between the lens surface and the workpiece surface in focus, making it possible to observe workpieces which are usually hard-to-focus because of awkward projections.

- The metallurgical plan apochromatic (M Plan Apo) objective lens is an excellent optical system. This objective provides a flat, chromatic aberration-free image throughout the field of view, making it is suitable for any type of microscope.

- Specially designed objective lenses are also available with correction for the near-infrared, near-ultraviolet and ultraviolet regions of the spectrum, or various thicknesses of LCD screen glass.

- The mounting screw threads of objective lenses are designed to conform to JIS B-7141-1994.

M Plan Apo and M Plan Apo SL
Objectives for bright field observation

BD Plan Apo and BD Plan Apo SL
Objectives for bright/dark field observation

Near-ultraviolet wavelength corrected M Plan Apo NUV objectives

Ultraviolet wavelength corrected M Plan UV objectives

Near-infrared wavelength corrected M Plan Apo NIR objectives

Refer to the microscope units and objective lenses brochure

All products to be sold to commercial customers.
Product illustrations are without obligation. Product descriptions, in particular any and all technical specifications, are only binding when explicitly agreed upon.

Mitutoyo

Objectives for Brightfield Observation

M Plan Apo

Features

- Long Working Distances
- Infinity Corrected
- Bright Field Inspection
- High Quality Plan Apochromat Design
- Flat Image Surface over Entire Field of View

M Plan Apo for Bright Field Observation
Compatible with microscope types VMU / FS-70 / MF-U / Hyper MF-U
Note: Polarizing unit **(378-074)** is required when using 1X objective.

No.	Model	N.A.	W.D. [mm]	P.D. [mm]	f [mm]	R [µm]	D.F. [µm]	FOV 1 [mm]	FOV 2 [mm]	Mass [g]
378-800-12	M Plan Apo 1X	0,025	11	95	200	11	440	ø24	4,8 x 6,4	300
378-801-6	M Plan Apo 2X	0,055	34	95	100	5	91	ø12	2,4 x 3,2	220
378-802-6	M Plan Apo 5X	0,14	34	95	40	2	14	ø4,8	0,96 x 1,28	230
378-807-3	M Plan Apo 7,5X	0,21	35	95	26,67	1,3	6,2	ø3,6	0,64 x 0,85	240
378-803-3	M Plan Apo 10X	0,28	34	95	20	1	3,5	ø2,4	0,48 x 0,64	240
378-804-3	M Plan Apo 20X	0,42	20	95	10	0,7	1,6	ø1,2	0,24 x 0,32	270
378-805-3	M Plan Apo 50X	0,55	13	95	4	0,5	0,9	ø0,48	0,1 x 0,13	290
378-806-3	M Plan Apo 100X	0,7	6	95	2	0,4	0,6	ø0,24	0,05 x 0,06	320

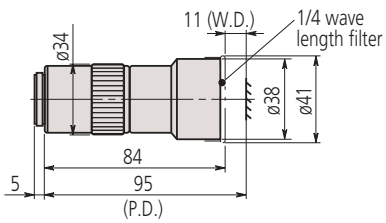

M Plan Apo 1X

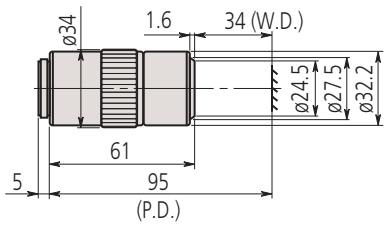

M Plan Apo 2X

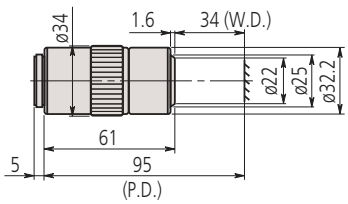

M Plan Apo 5X

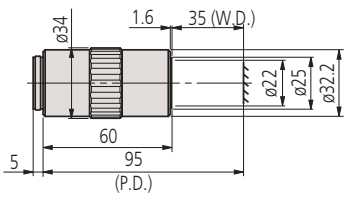

M Plan Apo 7,5X

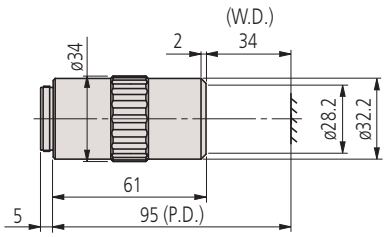

M Plan Apo 10X

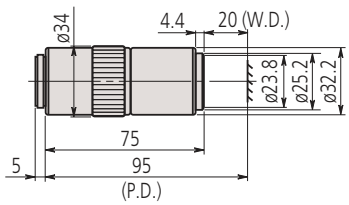

M Plan Apo 20X

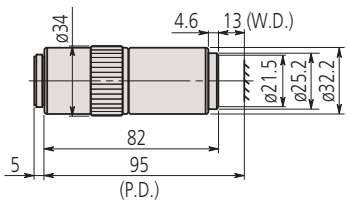

M Plan Apo 50X

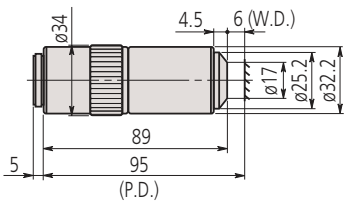

M Plan Apo 100X

Specifications

Abbreviations in product table	N.A.: Numerical aperture W.D.: Working distance P.D.: Parfocal distance f: Focal distance R: Resolving power D.F.: Depth of field FOV 1: Field of view when using ø24 mm eyepiece FOV 2: Field of view when using a digital camera with 1/2" chip size

Refer to the microscope units and objective lenses brochure

All products to be sold to commercial customers.
Product illustrations are without obligation. Product descriptions, in particular any and all technical specifications, are only binding when explicitly agreed upon.

Objectives for Brightfield Observation

Specifications

Abbreviations in product table

N.A.: Numerical aperture
W.D.: Working distance
P.D.: Parfocal distance
f: Focal distance
R: Resolving power
D.F.: Depth of field
FOV 1: Field of view when using ø24 mm eyepiece
FOV 2: Field of view when using a digital camera with 1/2" chip size

Refer to the microscope units and objective lenses brochure

M Plan Apo HR

Features

- High Resolution
- Infinity Corrected
- Breight Field Inspection
- High Quality Plan Apochromat
- Flat Image Surface over Entire Field of View

M Plan Apo HR for Bright Field Observation
Compatible with microscope types VMU / FS-70 / MF-U / Hyper MF-U
Note: These objectives offer extra-high resolving power.

No.	Model	N.A.	W.D. [mm]	P.D. [mm]	f [mm]	R [µm]	D.F. [µm]	FOV 1 [mm]	FOV 2 [mm]	Mass [g]
378-787-4	M Plan Apo HR 5X	0,21	25,5	95	40	1,3	6,2	ø4,8	0,96 x 1,28	285
378-788-4	M Plan Apo HR 10X	0,42	15	95	20	0,7	1,6	ø2,4	0,48 x 0,64	460
378-814-4	M Plan Apo HR 50X	0,75	5,2	95	4	0,4	0,49	ø0,48	0,1 x 0,13	400
378-815-4	M Plan Apo HR 100X	0,9	1,3	95	2	0,3	0,34	ø0,24	0,05 x 0,06	410

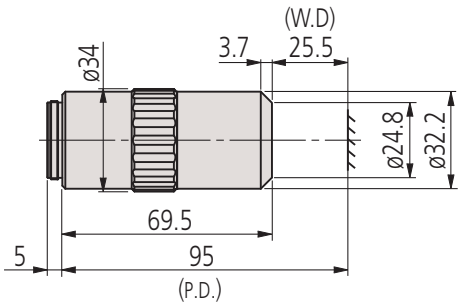

M Plan Apo HR 5X

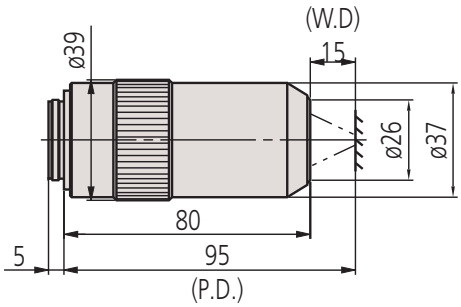

M Plan Apo HR 10X

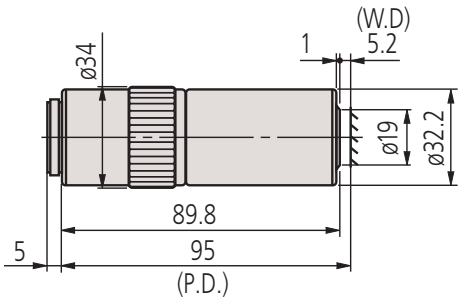

M Plan Apo HR 50X

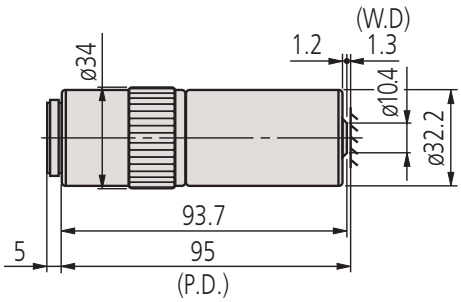

M Plan Apo HR 100X

All products to be sold to commercial customers.
Product illustrations are without obligation. Product descriptions, in particular any and all technical specifications, are only binding when explicitly agreed upon.

Mitutoyo

Objectives for Brightfield Observation

M Plan Apo SL

Features

- Super Long Working Distances
- Infintiy Corrected
- Bright Field Inspection
- High Qualtiy Plan Apochromat Design
- Flat Image Surface over Entire Field of View

M Plan Apo SL for Bright Field Observation
Compatible with microscope types VMU / FS-70 / MF-U / Hyper MF-U
Note: These objectives offer extra-long working distance.

No.	Model	N.A.	W.D. [mm]	P.D. [mm]	f [mm]	R [µm]	D.F. [µm]	FOV 1 [mm]	FOV 2 [mm]	Mass [g]
378-810-3	M Plan Apo SL 20X	0,28	30,5	95	10	1	3,5	ø1,2	0,24 x 0,32	240
378-811-15	M Plan Apo SL 50X	0,42	20,5	95	4	0,7	1,6	ø0,48	0,1 x 0,13	280
378-813-3	M Plan Apo SL 100X	0,55	13	95	2	0,5	0,9	ø0,24	0,05 x 0,06	290

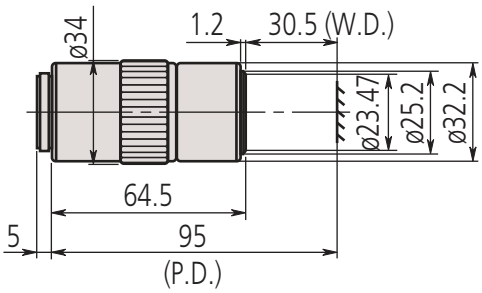

M Plan Apo SL 20X

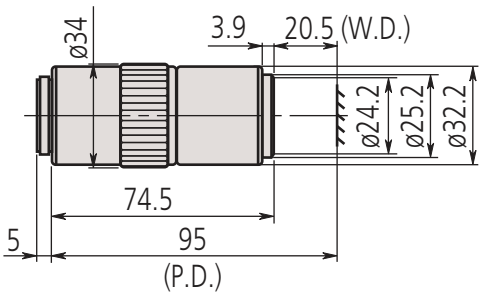

M Plan Apo SL 50X

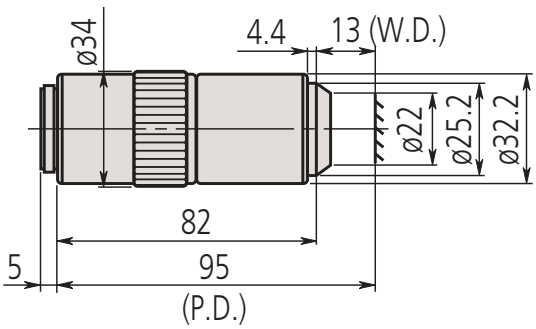

M Plan Apo SL 100X

Specifications

Abbreviations in product table	N.A.: Numerical aperture W.D.: Working distance P.D.: Parfocal distance f: Focal distance R: Resolving power D.F.: Depth of field FOV 1: Field of view when using ø24 mm eyepiece FOV 2: Field of view when using a digital camera with 1/2" chip size

Refer to the microscope units and objective lenses brochure

All products to be sold to commercial customers.
Product illustrations are without obligation. Product descriptions, in particular any and all technical specifications, are only binding when explicitly agreed upon.

Objectives for Brightfield Observation

G Plan Apo

Features

- Infinity Corrected
- Bright Field Inspection
- High Qualtiy Plan Apochromat Design
- Designed to observe Objects through 3,5 mm thick Cover Glass

Note: Contact Mitutoyo to custom order a specific cover glass correction to suit your application if required. Thickness, material and refractive index are all specifiable within usual limits.

Specifications

Abbreviations in product table	Mag.: Magnification N.A.: Numerical aperture W.D.: Working distance P.D.: Parfocal distance f: Focal distance R: Resolving power D.F.: Depth of field FOV 1: Field of view when using ø24 mm eyepiece FOV 2: Field of view when using a digital camera with 1/2" chip size

Refer to the microscope units and objective lenses brochure

Glass Thickness Corrected
G Plan Apo for Bright Field Observation
Compatible with microscope types VMU / FS-70 / MF-U / Hyper MF-U
Note: The G Plan Apo Series are designed for observing a workpiece through glass (thickness: 3,5 mm).

No.	Model	N.A.	W.D. [mm]	P.D. [mm]	f [mm]	R [µm]	D.F. [µm]	FOV 1 [mm]	FOV 2 [mm]	Mass [g]
378-847	G Plan Apo 20X	0,28	29,42	96,19	10	1	3,5	ø1,2	0,24 x 0,32	270
378-848-3	G Plan Apo 50X	0,5	13,89	96,19	4	0,6	1,1	ø0,48	0,1 x 0,13	320

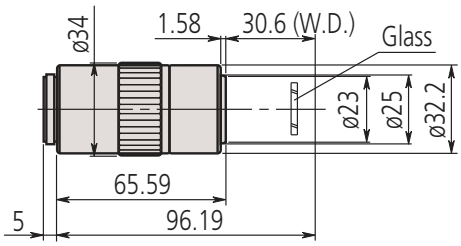

G Plan Apo 20X/t3,5

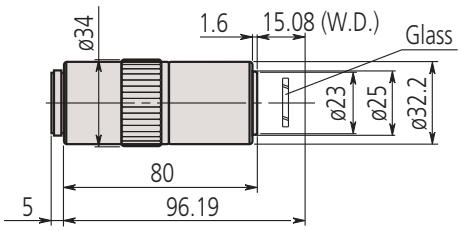

G Plan Apo 50X/t3,5

All products to be sold to commercial customers.
Product illustrations are without obligation. Product descriptions, in particular any and all technical specifications, are only binding when explicitly agreed upon.

Mitutoyo

Objectives for Brightfield/Darkfield Observation

BD Plan Apo

Features

- Bright/Dark Field Inspection
- Infinity corrected
- Long Working Distance
- High Qualtiy Plan Apochromat Design
- Suited for inspection of scratches, concavity and convexity on surfaces

BD Plan Apo for Bright/Dark Field Observation
Compatible with microscope types MF-U / Hyper MF-U

No.	Model	Magnification	N.A.	W.D. [mm]	f [mm]	R [µm]	D.F. [µm]	FOV 1 [mm]	FOV 2 [mm]	Mass [g]
378-832-7	BD Plan Apo 5X	5x	0,14	34	40	2	14	ø4,8	0,96 x 1,28	350
378-830-7	BD Plan Apo 7,5X	7,5x	0,21	34	26,67	1,3	6,2	ø3,6	0,64 x 0,85	350
378-833-7	BD Plan Apo 10X	10x	0,28	34	20	1	3,5	ø2,4	0,48 x 0,64	350
378-834-7	BD Plan Apo 20X	20x	0,42	20	10	0,7	1,6	ø1,2	0,24 x 0,32	400
378-835-7	BD Plan Apo 50X	50x	0,55	13	4	0,5	0,9	ø0,48	0,1 x 0,13	440
378-836-7	BD Plan Apo 100X	100x	0,7	6	2	0,4	0,6	ø0,24	0,05 x 0,06	460

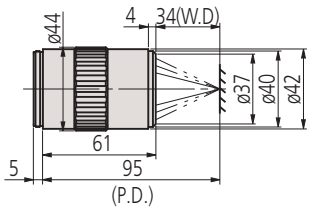

BD Plan Apo 2X

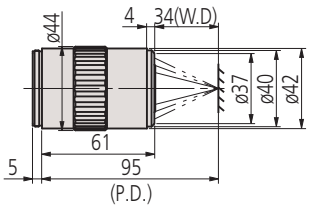

BD Plan Apo 5X

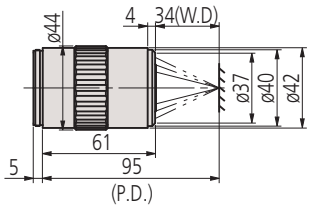

BD Plan Apo 7,5X

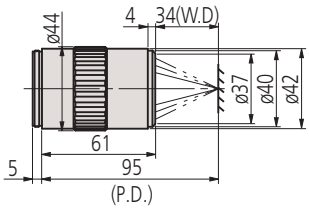

BD Plan Apo 10X

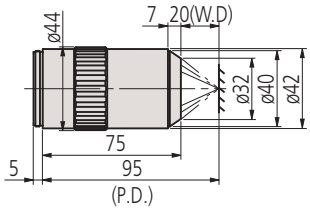

BD Plan Apo 20X

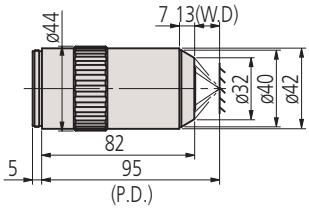

BD Plan Apo 50X

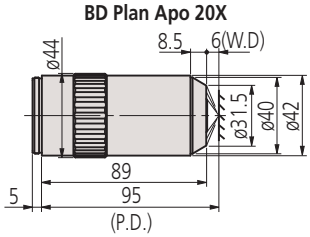

BD Plan Apo 100X

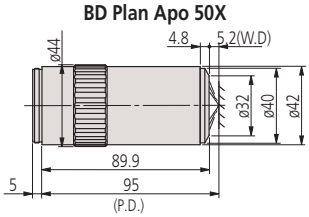

BD Plan Apo HR 50X

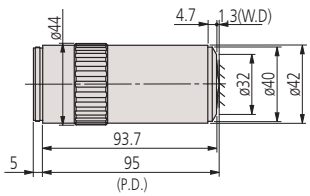

BD Plan Apo HR 100X

Specifications

Abbreviations in product table	N.A.: Numerical aperture W.D.: Working distance P.D.: Parfocal distance f: Focal distance R: Resolving power D.F.: Depth of field FOV 1: Field of view when using ø24 mm eyepiece FOV 2: Field of view when using a digital camera with 1/2" chip size

Refer to the microscope units and objective lenses brochure

All products to be sold to commercial customers.
Product illustrations are without obligation. Product descriptions, in particular any and all technical specifications, are only binding when explicitly agreed upon.

Objectives for NIR

M Plan Apo NIR / M Plan Apo NIR HR

Features

- Infinity Corrected
- Suitable for Bright Field Inspection and Laser Applications
- Long Working Distance
- High Quality Plan Apochromat Design
- Wavelength Correction from Visible to Near Infrared (1800 nm)

High-Power Type availabel (M Plan Apo NIR HR)

Specifications

Abbreviations in product table	N.A.: Numerical aperture W.D.: Working distance P.D.: Parfocal distance f: Focal distance R: Resolving power D.F.: Depth of field FOV 1: Field of view when using ø24 mm eyepiece FOV 2: Field of view when using a digital camera with 1/2" chip size
M Plan Apo NIR	Note: These objective lenses are designed so that the image of a workpiece remains focused within the focal depth even when the wavelength used is changed from within the visible range up to the near-infrared (480 to 1800 nm). Therefore the M Plan NIR Series are suitable for laser repair. However, when the wavelength used exceeds 1100 nm, the focussing position may deviate slightly from that in the visible range due to changes in glass dispersion and refractive index.

No.	Model	Magnification	N.A.	W.D. [mm]	P.D. [mm]	f [mm]	R [µm]	D.F. [µm]	FOV 1 [mm]	FOV 2 [mm]	Mass [g]
378-822-5	M Plan Apo NIR 5X	5x	0,14	37,5	95	40	2	14	ø4,8	0,96 x 1,28	220
378-823-15	M Plan Apo NIR 10X	10X	0,26	31	95	20	1,1	4,1	ø2,4	0,48 x 0,64	250
378-824-5	M Plan Apo NIR 20X	20x	0,4	20	95	10	0,7	1,7	ø1,2	0,24 x 0,32	300
378-825-5	M Plan Apo NIR 50X	50x	0,42	17	95	4	0,7	1,6	ø0,48	0,1 x 0,13	315
378-863-5	M Plan Apo NIR HR 50X	50x	0,65	10	95	4	0,42	0,65	ø0,48	0,1 x 0,13	450
378-864-5	M Plan Apo NIR HR 100X	100x	0,7	10	95	2	0,39	0,56	ø0,24	0,05 x 0,06	450

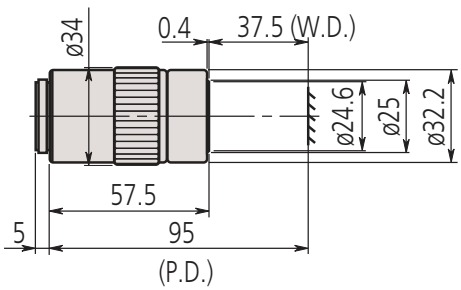

M Plan Apo NIR 5X

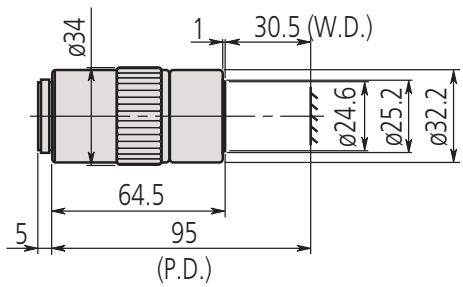

M Plan Apo NIR 10X

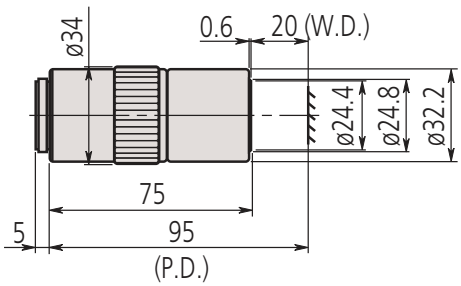

M Plan Apo NIR 20X

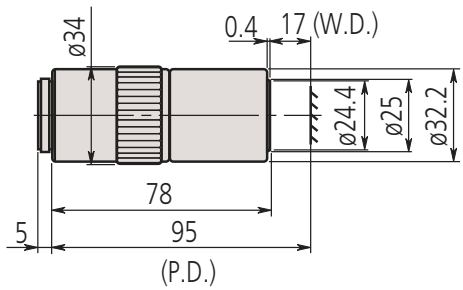

M Plan Apo NIR 50X

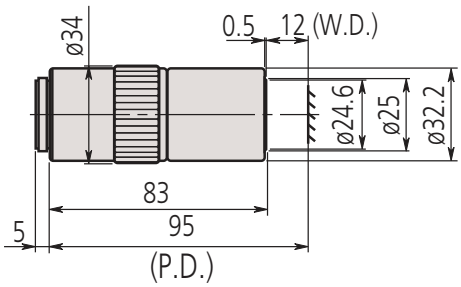

M Plan Apo NIR 100X

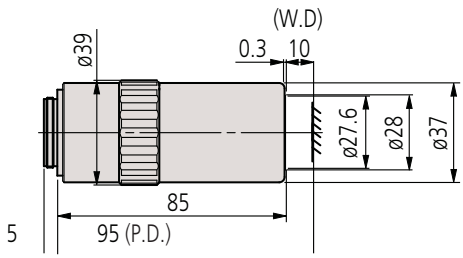

M Plan Apo NIR HR 50X
M Plan Apo NIR HR 100X

Refer to the microscope units and objective lenses brochure

All products to be sold to commercial customers.
Product illustrations are without obligation. Product descriptions, in particular any and all technical specifications, are only binding when explicitly agreed upon.

Mitutoyo

Objectives for NIR

M Plan Apo NIR B

Features

- Infinity Corrected
- Suitable for Bright Field Inspection and Laser Applications
- Long Working Distance 25,5 mm
- High Quality Plan Apochromat Design
- Wavelength Correction from Visible to Near Infrared (1800 nm)

No.	Model	Magnification	N.A.	W.D. [mm]	P.D. [mm]	f [mm]	R [µm]	D.F. [µm]	FOV 1 [mm]	FOV 2 [mm]	Mass [g]
378-867-5	M Plan Apo NIR B 20X	20x	0,4	25,5	95	10	0,7	1,7	ø1,2	0,24 x 0,32	350
378-868-5	M Plan Apo NIR B 50X	50x	0,42	25,5	95	4	0,7	1,6	ø0,48	0,24 x 0,13	375

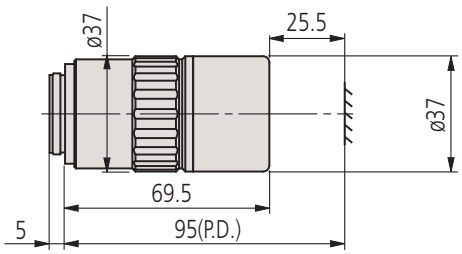

M Plan Apo NIR B 20X

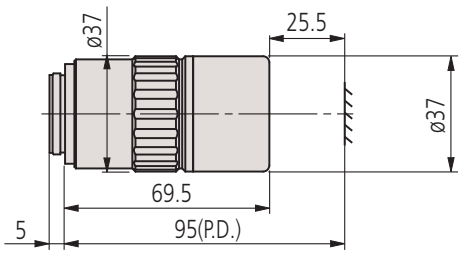

M Plan Apo NIR B 50X

Specifications

Abbreviations in product table	N.A.: Numerical aperture W.D.: Working distance P.D.: Parfocal distance f: Focal distance R: Resolving power D.F.: Depth of field FOV 1: Field of view when using ø24 mm eyepiece FOV 2: Field of view when using a digital camera with 1/2" chip size
M Plan Apo NIR B	Note: This series of objective has greatly improved in operability thanks to the achievement of an ultra-long working distance of 25,5 mm while maintaining the NA of the NIR series 20X/50X.
M Plan Apo NIR	Note: These objective lenses are designed so that the image of a workpiece remains focused within the focal depth even when the wavelength used is changed from within the visible range up to the near-infrared (480 to 1800 nm). Therefore the M Plan NIR Series are suitable for laser repair. However, when the wavelength used exceeds 1100 nm, the focussing position may deviate slightly from that in the visible range due to changes in glass dispersion and refractive index.

Refer to the microscope units and objective lenses brochure

All products to be sold to commercial customers.
Product illustrations are without obligation. Product descriptions, in particular any and all technical specifications, are only binding when explicitly agreed upon.

Objectives for NIR LCD

LCD Plan Apo NIR - LCD Plan Apo NIR HR

Features

- Suitabel for Bright Field Inspection and Laser-based repair Applications through 0,7 or 1,1 mm LCD cover-glass
- Long Working Distance
- High Quality Plan Apoochromat Design
- Wavelength correction from Visible to Near Infrared (1800 nm)

No.	Model	Magnification	N.A.	W.D. [mm]	f [mm]	R [µm]	D.F. [µm]	FOV 1 [mm]	FOV 2 [mm]	Mass [g]
378-827-5	LCD Plan Apo NIR 20X (t1,1)	20x	0,4	19,98	10	0,7	1,7	ø1,2	0,24 x 0,32	305
378-828-5	LCD Plan Apo NIR 50X (t1,1)	50x	0,42	17,13	3,9	0,7	1,6	ø0,48	0,1 x 0,13	320
378-829-5	LCD Plan Apo NIR 50X (t0,7)	50x	0,42	17,26	3,9	0,7	1,6	ø0,48	0,1 x 0,13	320
378-754-15	LCD Plan Apo NIR 100X (t0,7)	100x	0,5	12,06	2	0,6	1,1	ø0,24	0,05 x 0,06	335
378-869-5	LCD Plan Apo NIR HR 50X (t 0,7)	50x	0,65	9,6	4	0,4	0,7	ø0,48	0,1 x 0,13	450
378-870-5	LCD Plan Apo NIR HR 100X (t 0,7)	100x	0,7	9,6	2	0,4	0,6	ø0,24	0,05 x 0,06	450

Specifications

Abbreviations in product table

N.A.: Numerical aperture
W.D.: Working distance
P.D.: Parfocal distance
f: Focal distance
R: Resolving power
D.F.: Depth of focus
FOV 1: Field of view when using ø24 mm eyepiece
FOV 2: Field of view when using a digital camera with 1/2" chip size

Refer to the microscope units and objective lenses brochure

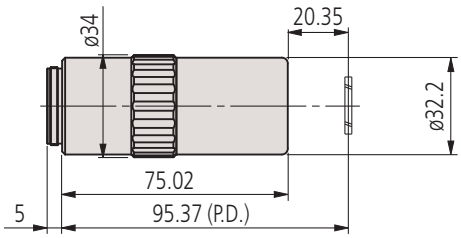

LCD Plan Apo NIR 20X (t1,1)

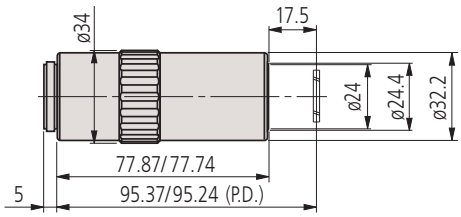

LCD Plan Apo NIR 50X (t1,1)/(t0,7)

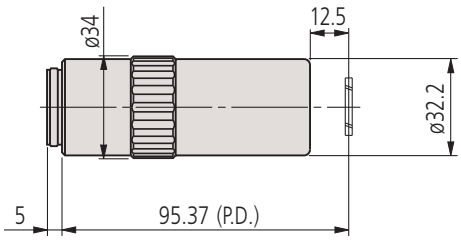

LCD Plan Apo NIR 100X (t1,1)

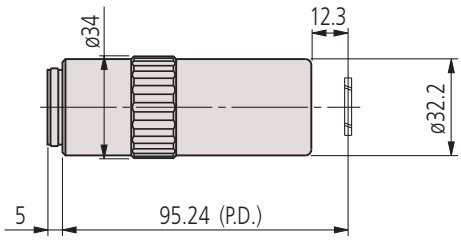

LCD Plan Apo NIR 100X (t0,7)

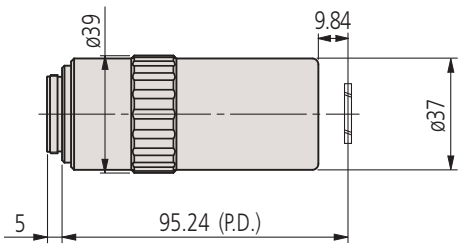

LCD Plan Apo NIR HR 50X (t0,7)

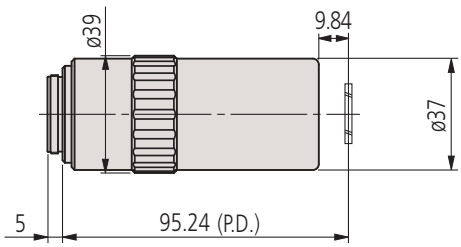

LCD Plan Apo NIR HR 100X(t0,7)

All products to be sold to commercial customers.
Product illustrations are without obligation. Product descriptions, in particular any and all technical specifications, are only binding when explicitly agreed upon.

Mitutoyo

Objectives for NUV

M Plan Apo NUV

Features

Suitable for Bright Field Inspection and Laser Applications
Long Working Distance
High Quality Plan Apochromat Design
Wavelength correction from Visible to Near Ultraviolett (355 nm)
High Power Type available (M Plan Apo NUV HR)

NUV

No.	Model	Magnification	N.A.	W.D. [mm]	P.D. [mm]	f [mm]	R [µm]	D.F. [µm]	FOV 1 [mm]	FOV 2 [mm]	Mass [g]
378-809-5	M Plan Apo NUV 10X	10x	0,28	30,5	95	20	1	3,5	ø2,4	0,48 x 0,64	255
378-817-8	M Plan Apo NUV 20X	20x	0,42	17	95	10	0,7	1,7	ø1,2	0,24 x 0,32	350
378-888-6	M Plan Apo NUV HR 50X	50x	0,65	10	95	4	0,42	0,65	ø0,48	0,1 x 0,13	550
378-819-4	M Plan Apo NUV 100X	100x	0,5	11	95	2	0,6	1,1	ø0,24	0,05 x 0,06	380

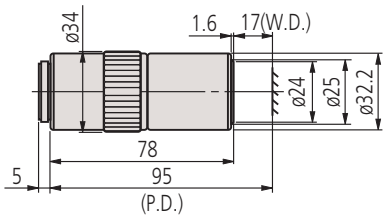

M Plan Apo NUV 20X

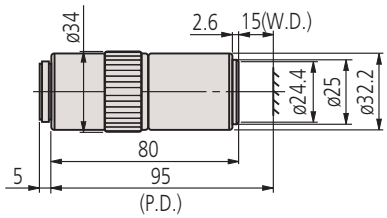

M Plan Apo NUV 50X

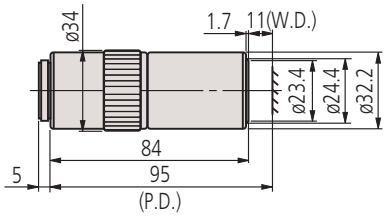

M Plan Apo NUV 100X

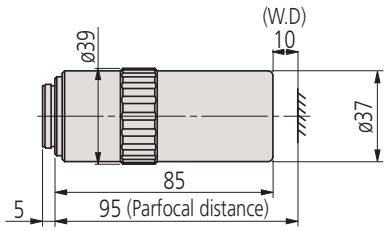

M Plan Apo NUV HR 50X

Specifications

Abbreviations in product table	N.A.: Numerical aperture W.D.: Working distance P.D.: Parfocal distance f: Focal distance R: Resolving power D.F.: Depth of focus FOV 1: Field of view when using ø24 mm eyepiece FOV 2: Field of view when using a digital camera with 1/2" chip size

Refer to the microscope units and objective lenses brochure

All products to be sold to commercial customers.
Product illustrations are without obligation. Product descriptions, in particular any and all technical specifications, are only binding when explicitly agreed upon.

Objectives for NUV LCD

Specifications

Abbreviations in product table

N.A.: Numerical aperture
W.D.: Working distance
P.D.: Parfocal distance
f: Focal distance
R: Resolving power
D.F.: Depth of focus
FOV 1: Field of view when using ø24 mm eyepiece
FOV 2: Field of view when using a digital camera with 1/2" chip size

Refer to the microscope units and objective lenses brochure

M Plan Apo NUV LCD

Features

- Suitable for Bright Field Inspection and Laser Applications through 0,7 or 1,1 mm LCD converglass
- Long Working Distance
- High Quality Plan Apochromat Design
- Wavelength correction from Visible to Near Ultraviolett (355 nm)
- High Power Type available (LCD Plan Apo NUV HR)

LCD NUV

No.	Model	Magnification	N.A.	W.D. [mm]	P.D. [mm]	f [mm]	R [µm]	D.F. [µm]	FOV 1 [mm]	FOV 2 [mm]	Mass [g]
378-890-8	LCD plan Apo NUV 20X (t0,7)	20x	0,42	16,96	95	10	0,7	1,6	ø1,2	0,24 x 0,32	350
378-820-8	LCD Plan Apo NUV 50X (t0,7)	50x	0,44	14,76	95	4	0,6	1,4	ø0,48	0,1 x 0,13	390
378-891-6	LCD plan Apo NUV HR 50X (t0,7)	50x	0,65	9,76	95	4	0,4	0,7	ø0,48	0,1 x 0,13	500

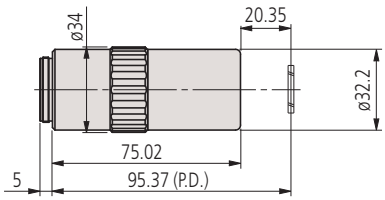

LCD Plan Apo NIR 20X (t1,1)

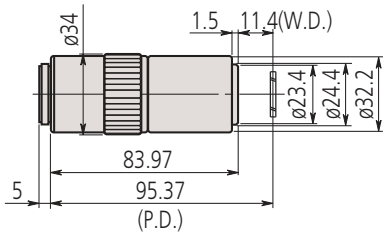

LCD Plan Apo NUV 100X (t1,1)

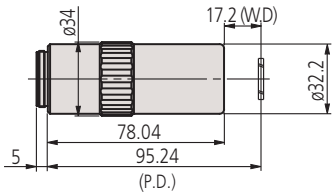

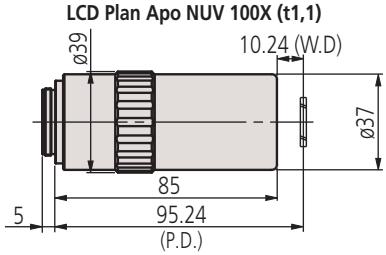

LCD Plan Apo NUV HR 50X (t0,7)

All products to be sold to commercial customers.
Product illustrations are without obligation. Product descriptions, in particular any and all technical specifications, are only binding when explicitly agreed upon.

Mitutoyo

Objectives for UV

M Plan UV

Features

- Suitable for Bright Field Inspection and Laser Applications
- Long Working Distance
- High Quality Plan Design
- Wavelength optimized for Visible and Ultraviolett (266 nm) Wavelength
- High Transmission in Ultraviolett Range

UV

No.	Model	Magnification	N.A.	W.D. [mm]	P.D. [mm]	f [mm]	R [µm]	D.F. [µm]	FOV 1 [mm]	FOV 2 [mm]	Mass [g]
378-844-15	M Plan UV 10X	10x	0,25	20	95	20	1,1	4,4	ø2,4	0,48 x 0,64	310
378-838-8	M Plan UV 50X	50x	0,4	12	95	4	0,7	1,7	ø0,48	0,1 x 0,13	400
378-839-5	M Plan UV 80X	80x	0,55	10	95	2,9	0,5	0,9	ø0,3	0,06 x 0,08	380

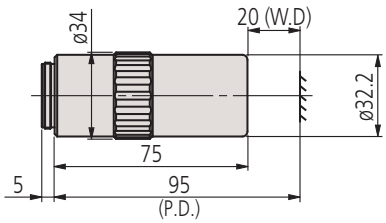

M Plan UV 10X

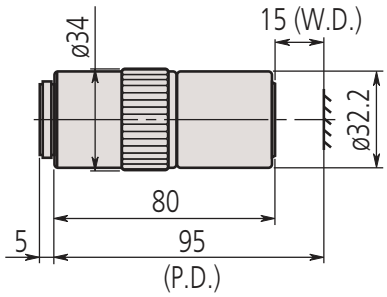

M Plan UV 20X

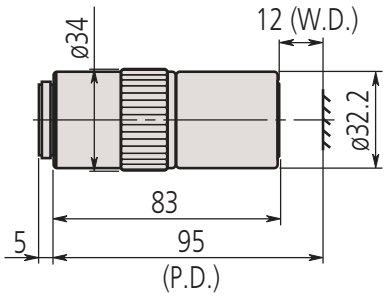

M Plan UV 50X

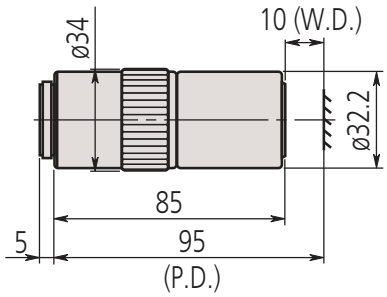

M Plan UV 80X

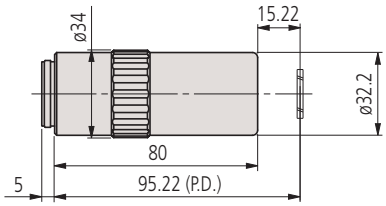

LCD Plan UV 20X (t0,7)

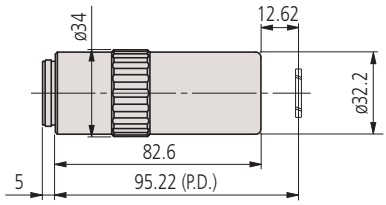

LCD Plan UV 50X (t0,7)

Specifications

Abbreviations in product table

N.A.: Numerical aperture
W.D.: Working distance
P.D.: Parfocal distance
f: Focal distance
R: Resolving power
D.F.: Depth of focus
FOV 1: Field of view when using ø24 mm eyepiece
FOV 2: Field of view when using a digital camera with 1/2" chip size

Refer to the microscope units and objective lenses brochure

All products to be sold to commercial customers.
Product illustrations are without obligation. Product descriptions, in particular any and all technical specifications, are only binding when explicitly agreed upon.

Measuring Projector PJ-PLUS Series

PJ-PLUS

The profile projector that "can be operated intuitively" even by inexperienced people and also has excellent durability and energy-saving performance thanks to the adoption of an "LED illumination source" and "fanless cooling system".
It provides stable dimension and angle measurements in harsher environments, such as manufacturing and processing lines, than can be handled by conventional models.

PJ-P1010A

No.	Model	Quick-release mechanism	XY stage table top size [mm]	XY stage effective area [mm]	Stage glass No.	Max stage loading [kg]	Mass [kg]
302-801-10	PJ-P1010A	X and Y axes	250 x 250	142 x 142	12BAE041	10	114.0
302-802-10	PJ-P2010A	X and Y axes	350 x 280	240 x 140	12BAD760	8	118.0

Standard accessories

No.	Description
383876	Cover, Vinyl cover for PJ projectors

Optional accessories

No.	Description
172-116	Inspection tool, Standard scale 50 mm/ 0,1 mm
172-118	Inspection tool, Reading scale 200 mm/ 0,5 mm
172-119	Inspection tool, Reading scale 8"/0.02"
172-161	Inspection tool, Reading Scale 300 mm/ 0,5 mm
172-162	Inspection tool, Reading Scale 12"/0.02"
172-160-3	Green Filter, Colour filter
172-197	Rotary Table
172-229	Lens accessory, Oblique reflecting mirror for 10X lens
172-230	Lens accessory, Oblique reflecting mirror for 20X lens
172-378	V-BLOCK, with clamp
176-107	Fixture/clamping material, Holder with clamp
172-160-2	Green filter
176-105	Fixture/clamping material, Swivel center support
176-310	Stage Adaptor, Type B, for size 2010
12AAE671	Attachment, OPTOEYE-200 Attachment A, 250-350 mm
332-151	Sensor, Optoeye-200 edge detection sensor
02ZAA021	Power Cord (CEE), High Capacity Type
176-106	Rotary table
172-196	Rotary table, 100 mm for TM-1005B
172-198	Rotary table, 100 mm with fine feed knob for TM-1005B
264-155D	2D Data processor, QM-Data 200, stand type
264-156D	2D Data processor, QM-Data 200, arm mount type
172-502	LED Circular Illuminator (PJ-PLUS)
12AAX044	Damping Ring A (for PJ 20X), to connect LED illumination 172-502 to 20x lens
172-296	Projection lens set, 10X magnification
172-297	Projection lens set, 20X magnification
172-298	Projection lens set, 50X magnification
172-299	Projection lens set, 100X magnification

172-116

172-229

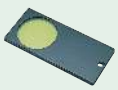

172-160-3

172-502

System Diagram

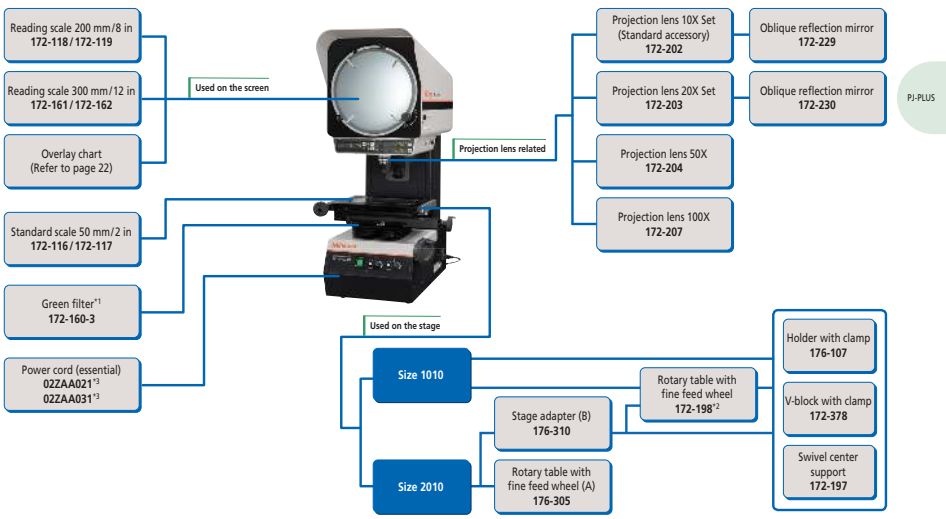

All products to be sold to commercial customers.
Product illustrations are without obligation. Product descriptions, in particular any and all technical specifications, are only binding when explicitly agreed upon.

Mitutoyo

Measuring Projector PJ-H30 Series

This measuring projector has adjustable incident illumination.
The PJ-H30 offers you the following benefits:

- By rotating the condenser lens and changing the angle of the mirror in the objective, you can represent even poorly reflecting surfaces optimally.
- Improved light intensity of a projected subject thanks to the new optical contour illumination system.
- High measuring accuracy (above JIS standard).
- Measuring stage with rapid single-handed adjustment on both axes enabling you to switch smoothly between quick positioning and fine adjustment.
- Constant current power supply unit with acceleration control to maximize the service life of the halogen lamp.
- Easily read digital counter with large digit display.
- The PJ-H30D models also offer you a built-in precision edge detector (Optoeye).
- RS-232C output.

3017B model

PJ-H30A1010B

PJ-H30A2010B

PJ-H30A2017B

PJ-H30A3017B

PJ-H30A

No.	Focus-sing	Accuracy	Edge de-tector	XY stage table top size [mm]	XY stage effective area [mm]	Stage glass No.	Table swivel-ing func-tion	Max stage loading [kg]	Mass [kg]
303-712-1D	Manual	(3+0,02L) µm L: measuring length	Optional	300 x 240	180 x 150	**380412**	±3°	10	176.0
303-713-1D	Manual	(3+0,02L) µm L: measuring length	Optional	350 x 280	250 x 150	**382762**	±3°	10	178.0
303-714-1D	Manual	(3+0,02L) µm L: measuring length	Optional	410 x 342	270 x 240	**12BAD363**	±5°	20	205.0
303-715-1D	Manual	(3+0,02L) µm L: measuring length	Optional	510 x 342	370 x 240	**12BAD330**	±5°	20	212.0

Specifications

Projected image	Erect
Projector screen	Effective diameter: 306 mm Screen material: Fine-ground glass Screen rotation: ±360°, fine adjustment and clamp Angle display: Digital counter (LED) Resolution: 1' or 0,01° (switchable) Range: ±370° ABS/INC mode switching, Zero Set Reference lines: Cross-hairs
Projection lens	10X **(172-472)** Optional: 5X, 20X, 50X, 100X
Magnification accuracy	Contour illumination: ±0,1% or better Surface illumination: ±0,15% or better
Contour illumination	Light source: Halogen bulb (24V, 150W) Optical system: Telecen-tric zoom Functions: Continuously variable brightness adjust-ment, Heat-absorbing fil-ter, Cooling fan
Surface illumination	Light source: Halogen bulb (24V, 150W) Optical system: Vertical/ Oblique illumination with an adjustable con-denser lens Functions: Continuously variable brightness adjust-ment, Heat-absorbing fil-ter, Cooling fan
Power supply	220V AC, 50/60Hz
Accuracy	(3+0,02L) µm L: measuring length
Resolution	0,001 mm

All products to be sold to commercial customers.
Product illustrations are without obligation. Product descriptions, in particular any and all technical specifications, are only binding when explicitly agreed upon.

Measuring Projector PJ-H30 Series

Optional accessories

No.	Description
12AAG983	Attachment, Optoeye-200 Attachment for PJ-H30 Series
12AAG981	Filter, Green filter for PJ-H30 Series projector
176-305	Rotary Table, Type A, D=240 mm
176-306	Illumination Unit, Type B, D=270 mm
176-105	Fixture/clamping material, Swivel center support
172-271	Projection lens, 5X magnification for PJ-311
172-473	Projection lens, 20X magnification for PJ-H30 Series
172-474	Projection lens, 50X magnification for PJ-H30 Series
172-475	Projection lens, 100X magnification for PJ-H30 Series
172-378	V-BLOCK, with clamp
12AAG982	Stand, Stand for QM-Data 200 on PJ-H30 Series
264-155D	2D Data processor, QM-Data 200, stand type
011534	MC Special Cleaner
332-151	Sensor, Optoeye-200 edge detection sensor
264-156D	2D Data processor, QM-Data 200, arm mount type
172-116	Inspection tool, Standard scale 50 mm/ 0,1 mm
172-118	Inspection tool, Reading scale 200 mm/ 0,5 mm
172-161	Inspection tool, Reading Scale 300 mm/ 0,5 mm
12AAE671	Attachment, OPTOEYE-200 Attachment A, 250-350 mm
172-198	Rotary table, 100 mm with fine feed knob for TM-1005B
6. Printer and interface	
12AAA807D	Cable RS-232C 2m Null Modem Type, Crossed Type
Stands	
172-197	Rotary Table

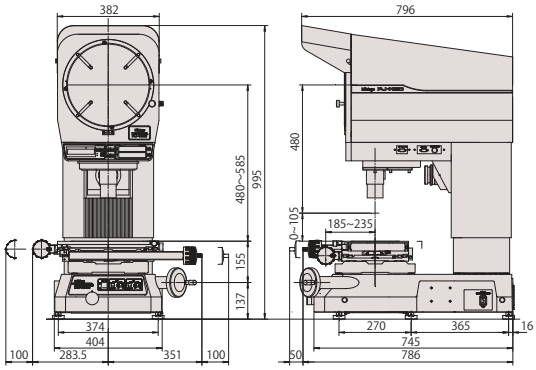

PJ-H30A2010B Model

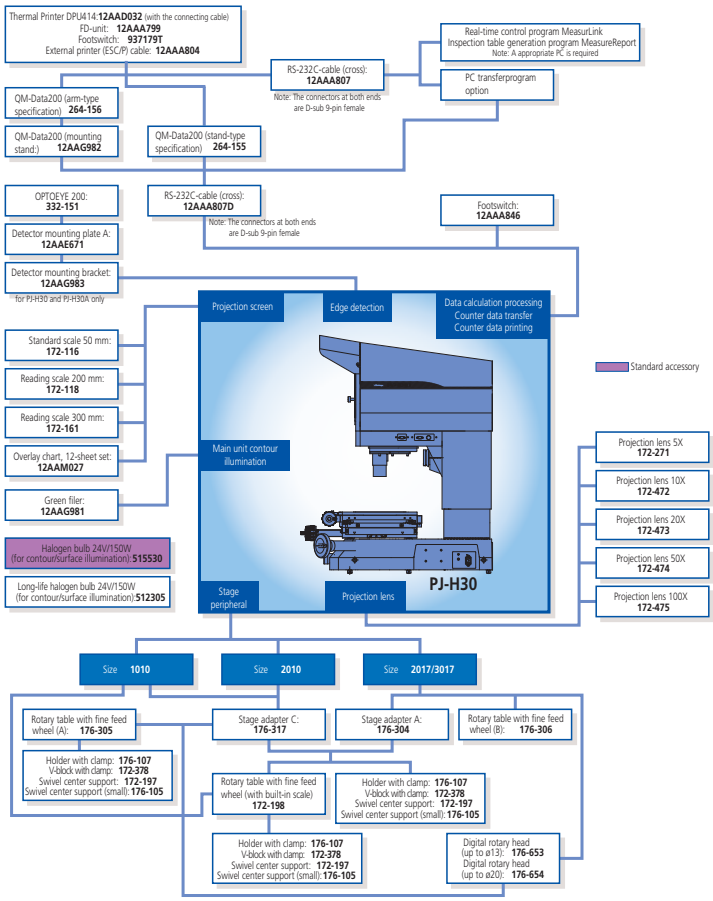

Vertical/oblique switchable surface illumination

Vertical illumination

Oblique illumination

264-155D
QM-Data 200

Profile Projector brochure on request

All products to be sold to commercial customers.
Product illustrations are without obligation. Product descriptions, in particular any and all technical specifications, are only binding when explicitly agreed upon.

Mitutoyo

Measuring Projector PV-5110

- This measuring projector is a robust stand-alone device.
- The large rotatable screen guarantees you good observation and easy measuring.

304-919D
Counter is optional

KA Counter

QM-Data 200

OPTOEYE 200

No.	Model	XY stage [mm]	Measuring method	Quick-release mechanism	XY stage table top size [mm]	XY stage effective area [mm]	Stage glass No.	Table swiveling function	Max stage loading [kg]
304-919D	PV-5110	200 x 100	Linear encoder	X and Y axes	380 x 250	266 x 170	**382762**	±3°	5

Specifications

Projected image	Inverted
Projector screen	Effective diameter: 508 mm Screen material: Fine-ground glass Screen rotation: ±360°, fine adjustment and clamp Angle reading: Digital counter (LED) Resolution: 1' or 0,01° (switchable) Range: ±370° ABS/INC mode switching, Zero Set Reference lines : Cross-hairs
Projection lens	10X **(172-402)** Optional: 5X, 20X, 50X, 100X
Magnification accuracy	Contour illumination: ±0,1% or better Surface illumination: ±0,15% or better
Contour illumination	Light source: Halogen bulb (24V, 150W) Optical system: Telecentric zoom Functions: 2-step (High/Low) brightness switch, Heat-absorbing filter, Cooling fan
Surface illumination	Light source: Halogen bulb (24V, 150W) Optical system: Vertical illumination Functions: Adjustable condenser lens, Oblique illumination (for 5X, 10X and 20X), Heat-absorbing filter, Cooling fan
Focussing	Manual
Resolution	0,001 mm
Power supply	220 - 240V AC, 50/60Hz
Mass	210 kg

Standard accessories

No.	Description
512305	Halogen Lamp for Measuring Projector, 24V/150W
12AAF182	Counter stand, For PV-5110 projector
382762	Stage glass, 280 x 180 mm, for projector
172-422	Illumination, Surface illumination unit PV-5110

All products to be sold to commercial customers.
Product illustrations are without obligation. Product descriptions, in particular any and all technical specifications, are only binding when explicitly agreed upon.

Measuring Projector PV-5110

Optional accessories

No.	Description
172-198	Rotary table, 100 mm with fine feed knob for TM-1005B
172-161	Inspection tool, Reading Scale 300 mm/ 0,5 mm
172-116	Inspection tool, Standard scale 50 mm/ 0,1 mm
011534	MC Special Cleaner
264-156D	2D Data processor, QM-Data 200, arm mount type
172-330	Inspection tool, Standard scale 80 mm/ 0,1 mm
172-329	Inspection tool, Reading scale 600 mm/ 0,5 mm
172-160-2	Green filter
172-319	Canopy
510189	Vinyl cover for PV500/600 projector
174-183D	Linear Scale Counter KA-212
12AAE672	Attachment, OPTOEYE-200 Attachment B, 500-600 mm
172-197	Rotary Table
172-378	V-BLOCK, with clamp
176-107	Fixture/clamping material, Holder with clamp

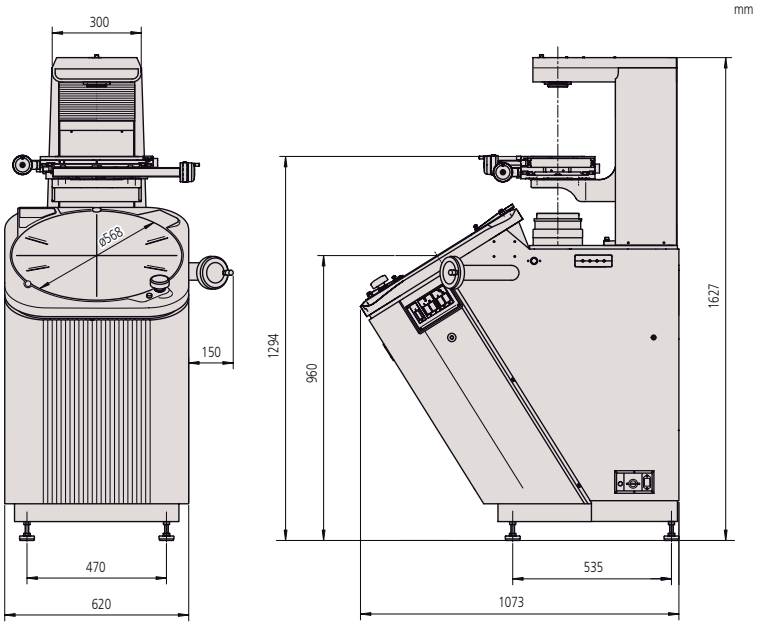

mm

	Magnification				
	5X	10X	20X	50X	100X
View field	ø101.6	ø50.8	ø25.4	ø10.16	ø5.08
H	125	181	206	87	87
W	60 (27)	60	60	32.4	22.5
D	120	120	120	64.8	45

( ) When using surface illumination

172-319

Profile Projector brochure on request

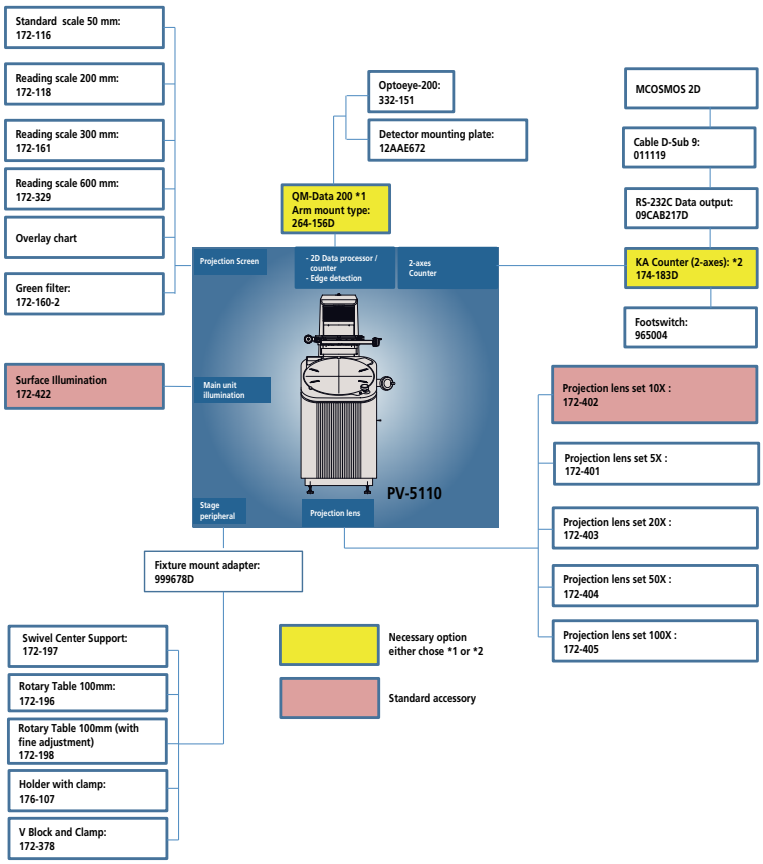

All products to be sold to commercial customers.
Product illustrations are without obligation. Product descriptions, in particular any and all technical specifications, are only binding when explicitly agreed upon.

Mitutoyo

Measuring Projector PH-3515F

Measuring Projector PH-3515F

- Due to the PH-3515F's horizontal-beam illumination, you can easily measure larger and heavier workpieces including toothed racks and punching tools. You can use the projector for a wide range of applications due to its generous 254 x 152 mm stage travel and 45 kg allowable stage loading.

172-868D

No.	Range	Model	XY stage [mm]	Measuring method	Quick-release mechanism	XY stage table top size [mm]	Table swiveling function	Max stage loading [kg]
172-868D	254 x 152 mm	PH-3515F	254 x 152	Linear encoder	X axis	450 x 146	±10°	45

Specifications

Projected image	Erect
Projector screen	Effective diameter: 353 mm Screen material: Fine-ground glass Screen rotation: ±360°, fine feed and clamp Angle display: Digital counter (LED) Resolution: 1' or 0,01° (switchable) Range: ±370° ABS/INC mode switching, Zero Set Reference lines : Cross-hairs
Projection lens	10X **(172-184)** Optional: 5X, 20X, 50X, 100X
Magnification accuracy	Contour illumination: ±0,1% or better Surface illumination: ±0,15% or better
Contour illumination	Light source: Halogen bulb (24V, 150W) Optical system: Telecentric system Functions: 2-step (High/Low) brightness adjustment, Heat-absorbing filter, Cooling fan
Surface illumination	Light source: Halogen bulb (24V, 150W) Optical system: Vertical illumination Functions: Adjustable condenser lens, 2-step (High/Low) brightness adjustment, Heat-absorbing filter, Cooling fan
Focussing	Manual
Resolution	0,001 mm
Power supply	220 - 240V AC, 50/60Hz
Mass	150 kg

Standard accessories

No.	Description
383228	Cover, Vinyl cover for PH3500 projector
512305	Halogen Lamp for Measuring Projector, 24V/150W
12BAA637	Bulb, Halogen 24V/200W for PH-3515F twin fiber

All products to be sold to commercial customers.
Product illustrations are without obligation. Product descriptions, in particular any and all technical specifications, are only binding when explicitly agreed upon.

Measuring Projector PH-3515F

Optional accessories

No.	Description
332-151	Sensor, Optoeye-200 edge detection sensor
12AAE671	Attachment, OPTOEYE-200 Attachment A, 250-350 mm
172-116	Inspection tool, Standard scale 50 mm/ 0,1 mm
172-161	Inspection tool, Reading Scale 300 mm/ 0,5 mm
12AAM027	Overlay chart set, for Measuring Projector No. 11-22
172-118	Inspection tool, Reading scale 200 mm/ 0,5 mm
174-183D	Linear Scale Counter KA-212
172-423	Illumination, Surface illumination unit PH-3515F
172-286	Filter, Colour filter
172-142	Fixture/clamping material, Center support
172-143	Fixture/clamping material, Riser for center stage
172-144	Fixture/clamping material, Rotary vise
172-234	Fixture/clamping material, V-block with clamp
172-132	Fixture/clamping material, Vertical workpiece holder
12AAF182	Counter stand, For PV-5110 projector
011534	MC Special Cleaner
264-156D	2D Data processor, QM-Data 200, arm mount type

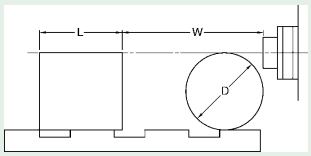

L : Max. workpiece width
W : Working distance
D : Max. workpiece diameter

PH-3515F mm

	Magnification				
	5X	10X	20X	50X	100X
View field	70.6	35.3	17.65	7.06	3.5
L	175	235	235	80	109
W	160 (64)	93 (35)	40	14.6	9.5
D	152.4	152.4	116	30.4	19

( ) When using surface illumination

QM-Data 200

mm

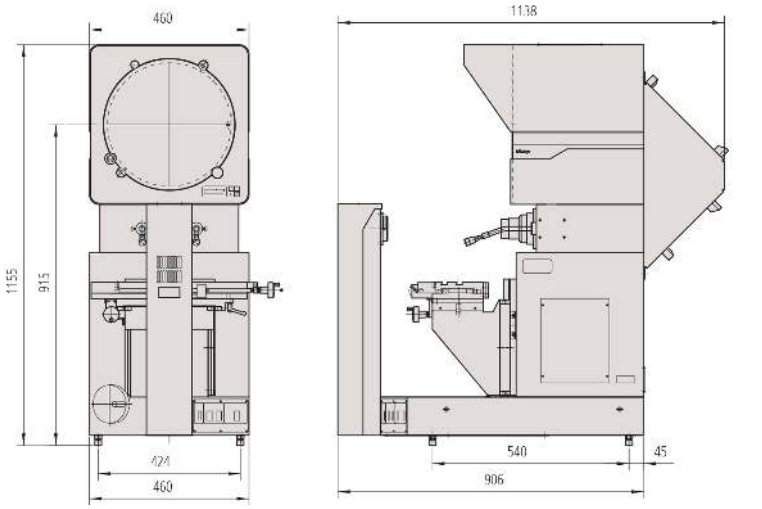

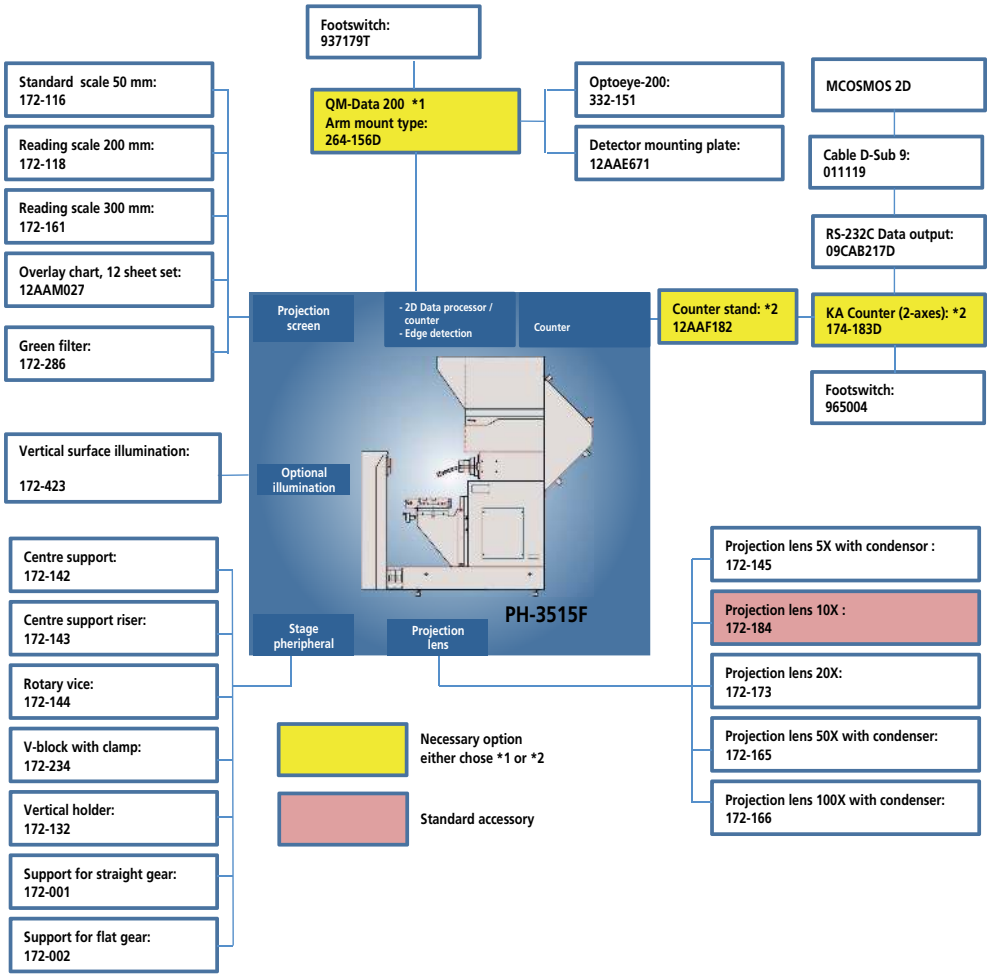

All products to be sold to commercial customers.
Product illustrations are without obligation. Product descriptions, in particular any and all technical specifications, are only binding when explicitly agreed upon.

Mitutoyo

M2 Software for Profile Projectors

M2 Software for Profile Projectors

Quick and easy measuring, with the innovative M2 software

Spend more time measuring and less time reading manuals thanks to the M2 software's straightforward and easy to operate user interface. Thanks to the familiar use of a touch screen, the M2 software can be quickly integrated into your process and drastically improve work efficiency.

- The M2 software interface is available for use in both portrait and landscape mode, providing maximum flexibility for the display or mounting device of your choosing
- Gain access to many powerful features and an intuitive measuring interface whether you are using an optical edge equipped system or an externally generated crosshair device. Precise optical edge detection mechanisms provide accurate results as well as access to powerful, industrial grade, measurement functionality

PJ-PLUS

PV-5100

PH-3515

Wireless Data Network: 802.11 b/g/n, Bluetooth V4.0 , or 802.11 ac, Bluetooth V4.0
LAN: 10/100/1000 Mbps
Camera: 1 M Pixel
Speaker: 2 x 1.5 W
Built-in Mic: Yes
Side I/O Ports:
2x USB 3.1 Gen 1
1 x 6-in-1 Card Reader
1 x Headphone
1 x Microphone
1 x Kensington Lock
Back I/O Ports:
2x USB 2.0
1 x HDMI-Out
1 x VGA(D-Sub)-Out
1 x RJ45 LAN
2 x COM Port(Serial Port)
1 x DC-in
Card Reader: 6-in-1: SD/SDHC/SDXC/MS/MS Pro/MMC

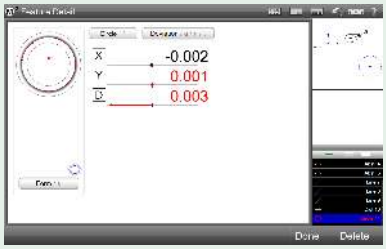

Geometric tolerancing
With only a few taps of the screen, you can measure features, apply tolerances, set nominals, and view deviation results.

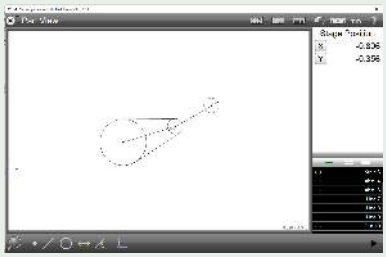

Graphics-based constructions
Construction types such as intersections and endpoints can be created from within the graphical part view.

M2 Software, 63AAA406

M2 Software, 63AAA407 / 63AAA462

All products to be sold to commercial customers.
Product illustrations are without obligation. Product descriptions, in particular any and all technical specifications, are only binding when explicitly agreed upon.

M2 Software for Profile Projectors

No.	Applicable models	System consist of	Function	Optional but necessary accessory
63AAA406	PJ-PLUS, PJ-A, PV5100, PH-3515, PH-A14	M2 Metrology software 2 axis interface box and 15 pin connecting cables Power supply and USB cable Machine bracket, RAM Ball, RAM arm, VESA mount (75 x 75 mm) for mounting the optional tablet PC to the projector body	Standard	63AAA572 All-in-One-PC with touch screen
63AAA407	PJ-PLUS, PJ-A, PH-3515, PH-A14	M2 Metrology software 2 axis interface box and 15 pin connecting cables Optical fibre and magnetic holder for sensor Power supply and USB cable Machine bracket, RAM Ball, RAM arm, VESA mount (75 x 75 mm) for mounting the optional tablet PC to the projector body	With edge detection	63AAA572 All-in-One-PC with touch screen
63AAA462	PV5100	M2 Metrology software 2 axis interface box and 15 pin connecting cables Optical fibre and magnetic holder for sensor Power supply and USB cable Machine bracket, RAM Ball, RAM arm, VESA mount (75 x 75 mm) for mounting the optional tablet PC to the projector body	With edge detection	63AAA572 All-in-One-PC with touch screen
63AAA572	Profile Projectors: 63AAA406, 63AAA407, 63AAA462 Microscopes: TM: 63AAA456, MF: 63AAA455	**Operating system:** Windows 10 Pro - ASUS recommends Windows 10 Pro for business. DOS **Display:** 15,6'' (39,6 cm), 16:9 Wide Screen, 1366 x 768/ LED-Backlight **Touch Screen:** Multi-touch (10 fingers touch) **Processor:** Intel® Celeron® J3160 **Chipset:** Integrated **Graphic:** Intel® HD Graphics **Memory:** 4GB up to 8GB; Single Channel, DDR3L at 1600MHz; 1 x SO-DIMM **Storage:** 2,5'' 500GB SATA III; 128GB SSD		

All products to be sold to commercial customers.
Product illustrations are without obligation. Product descriptions, in particular any and all technical specifications, are only binding when explicitly agreed upon.

Mitutoyo

Data Processing Unit QM-Data 200

The Data Processing Unit QM-Data 200 has been especially designed to process measurement data generated by a profile projector or measuring microscope.
The QM-Data 200 offers you the following benefits:

- Measuring instructions, measuring values and calculation results for various operations are shown on the back-lit LCD in a clear, easy to understand style.
- You can also print measuring results, either on a small and convenient thermal printer (available as a special option) or on an ESC/P printer and continuous paper.

Arm-mount type

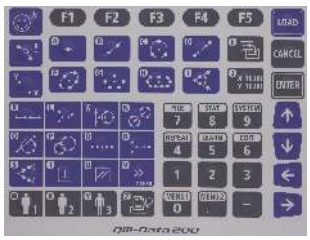

Intuitive panel design

No.	Description	Mass [kg]
264-155D	Stand-mount type	2.9
264-156D	Arm-mount type	2.8
264-159D	Stand-mount type for Hyper MF / MF-U	2.9

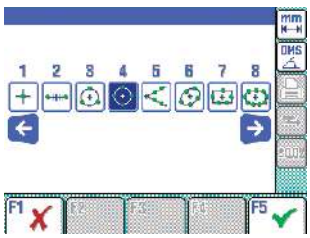

Clear function icons

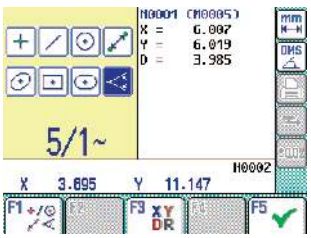

Coloured LCD display with backlight

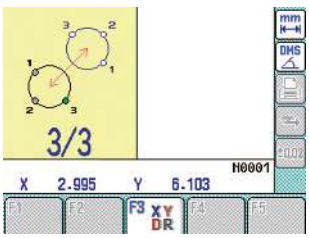

Guided measurements

Specifications

Resolution	1 / 0,1 µm
Dimensions [mm]	260 x 242 x 310: Stand-mount type 318 x 153 x 275: Arm-mount type
Screen	Colour graphics TFT LCD (320 x 240 dots, with background lighting)
Program functions	Part program creation, execution, editing
Power supply	100/240V AC, 50/60 Hz
Statisical processing	Number of data, maximum value, minimum value, mean value, standard deviation, range, histogram
Data output	USB, RS-232C, Printer
Display language	Japanese/English/German/French/Italian/Spanish/Portuguese/Chech/Traditional Chinese/Simplified Chinese/Korean/Turkish/Swedish/Polish/Dutch/Hungarian
Measuring of Geometric Elements	Maximum of 1000 elements, point, line, circle, distance, ellipse, rectangular hole, slotted hole, intersection and intersecting angle and point & angle, plus a number of functions for evaluation, e.g. perpendicularity and parallelism are provided.
Measurement result file output	CSV format; MUX-10F format
Functions	**Mitutoyo's AI Function:** The AI function (AI=Artificial Intelligence) renders choosing the element type before measuring obsolete. Point measurements are analyzed by the QM-Data and the results for basic elements calculated, thus accelerating the measuring procedure. **Customized Operation:** Macro functions and the creation of part programs speed up single and repetitive measurements. Additionally macro commands and part programs as well as frequently used standard operations can be stored as user settings.
Data input	USB, RS-232C, X/Y/Z-axis signal, Footswitch

Optional accessories

No.	Description
12AAA807D	Cable RS-232C 2m Null Modem Type, Crossed Type
63AAA108	RS-232C Signal Cable, D-Sub-25-D-Sub-9, 2m

All products to be sold to commercial customers.
Product illustrations are without obligation. Product descriptions, in particular any and all technical specifications, are only binding when explicitly agreed upon.

Edge Detection Sensor OPTOEYE 200

Specifications

Image detection	Directivity: All directions
Function	Automatic edge detection
Min. diameter	2 mm on the screen
Min. width	1 mm on the screen
Applicable illumination	Type: Surface/Contour illumination Range: 30 to 2000 Lux on the screen Bright-Dark field difference: 20 Lux

Optional accessories

No.	Description
12AAE671	Attachment, OPTOEYE-200 Attachment A, 250-350 mm
12AAE672	Attachment, OPTOEYE-200 Attachment B, 500-600 mm

This edge sensor allows you to make accurate measurements independant of your skill level by automatically detecting edges used in measurements.
The Optoeye 200 offers you the following benefits:

- OPTOEYE 200 reduces the effect of operator skill level on accuracy by automatically detecting edges used in measurements.
- PJ-H30: You can use the OPTOEYE edge detector on models PJ-H30A (requires adapter plate 12AAG983). The PJ-H30D models have a built-in edge detector.
- PV-5110, PJ-3515F and PJ-A14: You can use the OPTOEYE edge detector in combination with the QM-Data 200.
- PJ-PLUS: You can use the OPTOEYE edge detector on models 302-801-10/302-802-10 in combination with the QM-Data 200.
- When you are using the OPTOEYE all projector scales must be connected to QM-Data 200 directly and built-in counters can no longer be used (except PJ-H30D type).

No.	Description
332-151	Edge detection sensor OPTOEYE 200

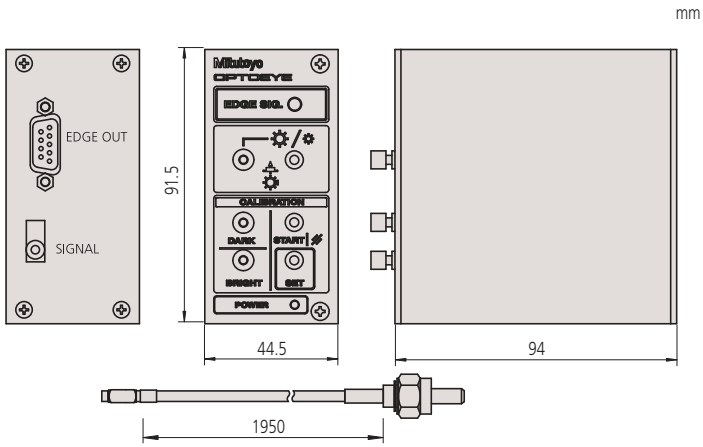

All products to be sold to commercial customers.
Product illustrations are without obligation. Product descriptions, in particular any and all technical specifications, are only binding when explicitly agreed upon.

Accessories for Measuring Projectors

Overlays

For measuring projectors

These standard overlay charts increase the range of application and the efficiency of Mitutoyo profile projectors.
This chart set offers you the following benefits:

- The charts are supplied in sizes ø250, 300, 340, 500 and 600 mm to suit the screens of Mitutoyo projectors.
- A large range of scales and profiles is provided that enables you to test workpiece features quickly and easily. You can test length, height, parallelism, angle, radius, taper, bore position, diameter, as well as all standardized thread and tooth profiles.
- All charts are made of a distortion-free special plastics compound and are provided with a protective coating.

Combination chart
Angle: Divisions at 10° and 30'
Features: All purpose chart for checking diameters, angles, radii and linear divisions

No.	Diameter [mm]
512651	250
512652	300
512653	340
512654	500
512655	600

Grid/protractor chart
Angle: 15° increments
Features: Ideal for checking diameters, concentricity of diameters, radii, angles and cams.

No.	Diameter [mm]
201380	250
201386	300
201392	340
512621	500
511843	600

Involute gear teeth

No.	Diameter [mm]
201385	250
201391	300
201397	340
512626	500
511848	600

ISO Metric threads

No.	Diameter [mm]
201384	250
201390	300
201396	340
512625	500
511847	600

Protractor chart
Angle : Divisions at 1° and 30'
Features: Dedicated chart especially designed for checking angles with exceptional clarity. Suitable for use at any magnification.

No.	Diameter [mm]
201381	250
201387	300
201393	340
512622	500
511844	600

Specifications

Grid divisions	10X: 0,1 mm 20X: 0,05 mm 50X: 0,02 mm 100X: 0,01 mm

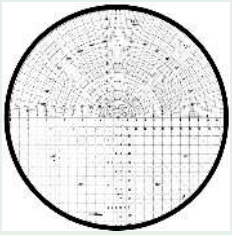
Combination chart

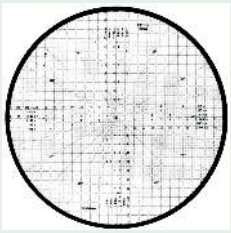
Grid/protractor chart

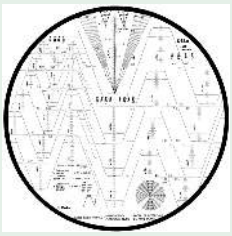
Involute gear teeth

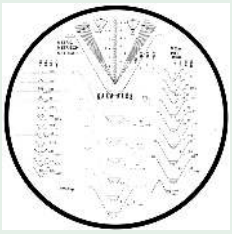
ISO Metric threads

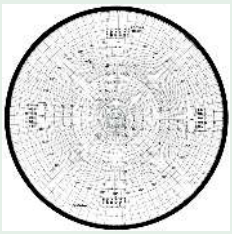
Protractor chart

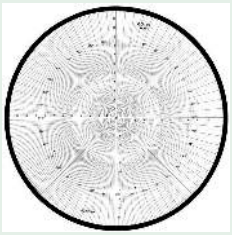
Radius/protractor chart

Radius chart

All products to be sold to commercial customers.
Product illustrations are without obligation. Product descriptions, in particular any and all technical specifications, are only binding when explicitly agreed upon.

Accessories for Measuring Projectors

Radius/protractor chart
Angle: Divisions at 1° and 30'
Features: Ideal for checking diameters, concentricity of diameters, radii, angles, radii and cams

No.	Diameter [mm]
201383	250
201389	300
201395	340
512624	500
511846	600

Radius chart
Features: Dedicated chart especially designed for checking radii, diameters and concentricity with exceptional clarity.

No.	Diameter [mm]
201382	250
201394	340
512623	500
511845	600

All products to be sold to commercial customers.
Product illustrations are without obligation. Product descriptions, in particular any and all technical specifications, are only binding when explicitly agreed upon.

Mitutoyo

Accessories for Measuring Projectors

Group 2 - Makes inspection of projected images an easy process.

Metric

No.	Diameter [mm]	Model
12AAM587	300	Circle/protractor chart metric
12AAM588	300	Circle chart 5 mm pitch metric
12AAM589	300	Circle chart 1 mm pitch metric
12AAM590	300	Grid chart 20X-50X, 1mm pitch
12AAM591	300	Grid chart 10 mm pitch metric
12AAM592	300	Crossed lines chart metric
12AAM593	300	Grid chart 1 mm pitch metric
12AAM594	300	Protractor chart 1° pitch metric
12AAM595	300	Hor.lines chart 1 mm pitch
12AAM596	300	Circle/protractor chart metric
12AAM597	300	Thread chart Metric, Unified, Whitworth
12AAM598	300	Thread/gear chart metric

Optional accessories

No.	Description
12AAM027	Overlay chart set, for Measuring Projector No. 11-22

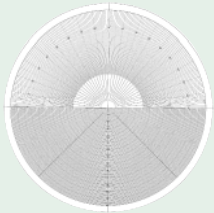
12AAM587

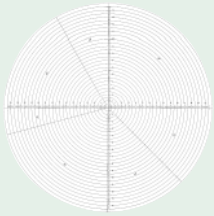
12AAM588

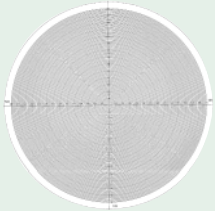
12AAM589

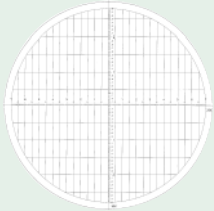
12AAM590

12AAM591

12AAM592

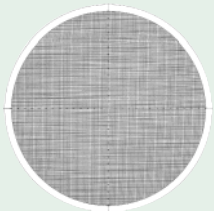
12AAM593

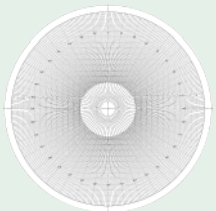
12AAM594

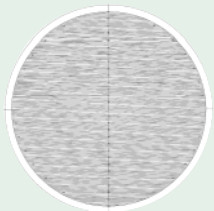
12AAM595

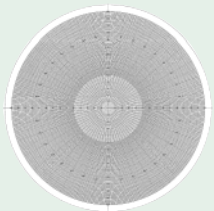
12AAM596

12AAM597

12AAM598

All products to be sold to commercial customers.
Product illustrations are without obligation. Product descriptions, in particular any and all technical specifications, are only binding when explicitly agreed upon.

Accessories for Measuring Projectors

Workpiece Fixtures

For Profile Projectors and Measuring Microscopes

172-142

172-143

176-107

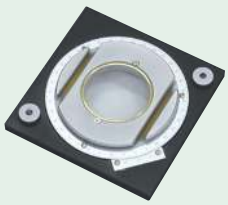

176-106

172-198

172-144

172-197

172-234 - 172-378

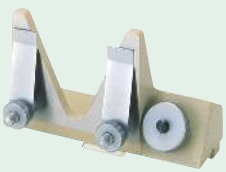

172-132

Centre Support

No.	Max. workpiece height	Mass [kg]
172-142	120 mm	3.3

Centre Support Riser

No.	Max. workpiece height	Mass [kg]
172-143	240 mm	3.3

Holder with Clamp

No.	Max. workpiece height	Mass [kg]
176-107	35 mm	0.42

Rotary Tables

No.	Effective glass dia. [mm]	Angular resolution °	Fine feed	Mass [kg]
176-305	182		Available	5.5
176-306	238		Available	6.5
176-106	66	6		1.7
172-196	100	1		2.5
172-198	96	1	Available	2.4

Rotary Vice

No.	Rotary range	Angle graduations °	Max. workpiece height	Mass [kg]
172-144	360°	5°	60 mm	2.8

Swivel Centre Support

No.	Max workpiece dia. [mm]	Swivel range	Max. workpiece length [mm]	Mass [kg]
176-105	70 (45) when swiveled 10°	±10°	140	2.4
172-197	80 (65) when swiveled 10°	±10°	140	2.5

V-Block with Clamp

No.	Max workpiece dia. [mm]	Width of block [mm]	Mass [kg]
172-234	50	60	1.24
172-378	25	41	0.8

Vertical Holder

No.	Mass [kg]
172-132	1.3

All products to be sold to commercial customers.
Product illustrations are without obligation. Product descriptions, in particular any and all technical specifications, are only binding when explicitly agreed upon.

Mitutoyo

Pocket Comparator

Pocket Comparator

This magnifier is ideal for a variety of measuring tasks. With the Precision Magnifier you can:

- Easily perform measurements including length, diameter, line thickness and thread pitch.
- Replace the reticles quickly.

No.	Model
183-140	Pocket comparator 10x
183-210	Mini scope 25X

Pocket comparator 10x

Reticle No. 1

Reticle No. 2

Reticle No. 3

Reticle No. 4

Reticle No. 5

Reticle No. 6

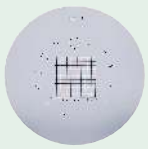

Reticle No. 7

Reticle No. 8

Reticle No. 9

Reticle No. 10

Reticle No. 11

Reticle No. 12

All products to be sold to commercial customers.
Product illustrations are without obligation. Product descriptions, in particular any and all technical specifications, are only binding when explicitly agreed upon.

Reticles for Comparator

Pocket comparator 10x

Reticle No. 1

Reticle No. 2

Reticle No. 3

Reticle No. 4

Reticle No. 5

Reticle No. 6

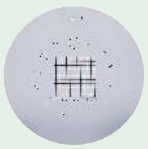

Reticle No. 7

Reticle No. 8

Reticle No. 9

Reticle No. 10

Reticle No. 11

Reticle No. 12

Pocket Comparator

This magnifier is ideal for a variety of measuring tasks. With the Precision Magnifier you can:

- Easily perform measurements including length, diameter, line thickness and thread pitch.
- Replace the reticles quickly.

No.	Model	Functions
183-141	Reticle No. 1	**Diameter:** 0,1; 0,2; 0,3; 0,4; 0,5; 0,6; 0,7; 1,5; 3 mm **Grid:** 0,3" x 0,4" (Pitch 0,025"); Radius 0 – 10 mm (Pitch 0,5mm) **Angle:** 0 – 90° (Pitch 1°) **Scale:** 0 – 10 mm (Pitch 0,1 mm)
183-142	Reticle No. 2	**Diameter:** 0-1 mm(pitch 0,1 mm); 0,05"; 0,01"; 0,02"; 0,03"; 0,04"; 0,05"; 1/64"; 1/32"; 3/64"; 1/16" **Radius:** 0 - 10 mm; 0,1 mm pitch from 0 - 1 mm; 0,5 mm pitch from 1 - 10 mm **Angle:** 0 - 90°; pitch 5° from 0 - 80°; pitch 1° from 80° - 90°; 29°; 55°; 60°; 118° **Scale:** 0 - 0,5" (pitch= 0,005"); 0 - 1/8" (pitch= 1/64")
183-143	Reticle No. 3	**Thickness:** 0,02 - 0,16 (pitch= 0,01 mm)
183-144	Reticle No. 4	**Diameter:** 0 - 1 mm (pitch= 0,1 mm) **Grid:** Vertically 5 mm, Horizontal 10 mm scale (pitch 1 mm) **Radius:** 0 - 10 mm (pitch= 0,5 mm) **Angle:** 0° - 90°; 1° pitch from 0° - 10°; 5° pitch from 10° - 90° **Scale:** 0 - 10 mm (pitch= 0,1 mm)
183-145	Reticle No. 5	**Diameter:** 0,002"; 0,005"; 0,01"; 0,02"; 0,04"; 0,05"; 1/64"; 1/32"; 3/64"; 1/16" **Radius:** 1/16"; 3/32"; 1/8"; 5/32"; 3/16"; 7/32" 1/4"; 9/32"; 5/16"; 11/32"; 3/8" **Angle:** 0° - 90°, pitch = 5°; Scale: 0 -10 mm (pitch = 0,2 mm); 0 - 0,5" (pitch = 0,005"); 1/64"; 1/32"; 3/64"; 3/32"; 1/8"; 1/4"; 3/16"
183-146	Reticle No. 6	**Radius:** 0 - 10 mm; 0,1 mm pitch from 0- 1 mm and 0,5 mm from 1 - 10 mm **Angle:** 0° - 90°; 5° pitch from 0° - 80 ° and 1° from 80° - 90° **Scale:** 0 - 3/8" (pitch = 1/64"); 0 - 0,3" (pitch = 0,005")
183-147	Reticle No. 7	**Diameter:** 0 - 2,5 mm with 0,1 mm pitch from 0,1 mm - 1 mm and 0,5 mm pitch from 1 mm - 10 mm **Grid:** Vertically/Horizontal 10 x 10 mm with 0,5 mm pitch
183-148	Reticle No. 8	**Scale:** 0 - 10 mm (pitch = 0,1 mm)
183-149	Reticle No. 9	**Radius:** 0 - 10 mm (pitch = 0,5 mm) **Angle:** 0° - 180° (pitch = 1°)
183-150	Reticle No. 10	**Metric screw threads:** 0,25; 0,3; 0,35; 0,4; 0,45; 0,6; 0,75; 0,9; 1 mm
183-151	Reticle No. 11	**Inch screw threads:** 50; 32; 28; 24; 20; 18; 16; 14; 8 threads
183-152	Reticle No. 12	**Radius:** 1/16" to 3/8" (pitch 1/32") **Angle:** 0° to 90° (pitch = 1°) **Scale:** 0 to 10 mm (pitch 0,1 mm); 0 to 5" (pitch 0,005")

All products to be sold to commercial customers.
Product illustrations are without obligation. Product descriptions, in particular any and all technical specifications, are only binding when explicitly agreed upon.

TAGLENS and Software

TAGLENS

The Mitutoyo TAGLENS
Ultra-deep-focus eliminates the most important conventional lens limitation. In optical inspection of three-dimensional targets the complicating factors of variable distance, inclination and movement inevitably result in some surfaces being out of focus in every image captured, which has always been the major issue with conventional lenses.
Ultra-high speed, varifocal lens.
A dedicated controller and the software TAGPAK-C V1,2 is equipped as standard.

No.	Delivered
379-010-1A	TAGLENS -T1 includes software TAGPAK-C
379-011-1A	TAGLENS-T1 E-Set includes software TAGPAK-C and –E (2NEA67B)

Specifications

Resonance frequency	70 kHz
Effective aperture	ø11 mm
Transmittance	90% or more (400 nm to 700 nm)
Refractivity range	0,7 D to 1 D
Mountable posture	All directions
Accuracy guaranteed temperature range	15°C to 30°C
Operating Environment / Humidity	10°C to 40°C / 40% to 70% RH or less (non-condensing)

Optional accessories

No.	Description
379-110	VMU-T1 for TAGLENS-T1
379-200A	Pulsed Light Source (PLS), for TAGLENS-T1
02NEA067B	Software for TAGLENS-T1, TAGPAK-E V1.1

TAGLENS-T1

Controller
The controller supplies power to the TAGLENS main unit and controls the lens main unit via TAGPAK-C. Other than the connector to the main unit, output connectors for synchronization with external devices are equipped. The AC adapter supplied should be used to supply power to the controller.

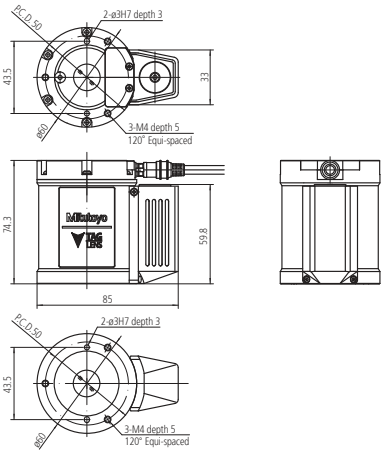

TAGLENS-T1 Dimensions

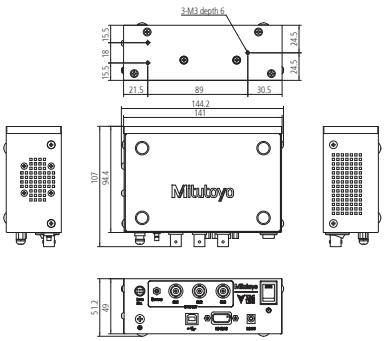

Controller Dimensions

All products to be sold to commercial customers.
Product illustrations are without obligation. Product descriptions, in particular any and all technical specifications, are only binding when explicitly agreed upon.

TAGLENS and Software

Specifications

Software	Optional Software for TAGLENS-T1 (Required for EDOF and checking inspection images)
OS compatibility	Windows10 Pro 64 bit
TAGLENS control software	TAGPAK-C Ver.1.2
CPU	Clock frequency: 2 GHz or more Number of physical cores: 4 cores or more (Recommendation: 8 cores or more)
Memory	8 GB or more
Hard disk	25 GB or more
Optical Drive	DVD-ROM Drive for installation software
Communication port	TAGLENS control: USB 2.0 x 1 port and RS-232C x 1 port GigE Vision control: 1000BASE-T x 1 port USB3 Vision control: USB 3.0 x 1 port Dongle: USB 2.0 x 1 port Pulsed Light Source control: USB 2.0 x 1 port
Monitor	SXGA (1280x1024 Pixel) or more

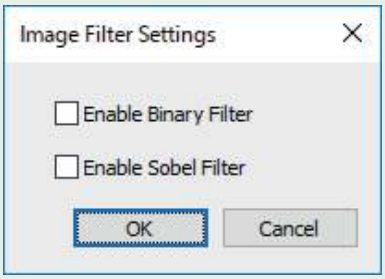

Two filters, the binarization filter and the Sobel* filter, are available for the image displayed on the viewer.

*** A filter function to emphasize a contour.**

TAGPAK-E (Optional Software)

TAGPAK-E software converts images captured by the optical system using TAGLENS for extended depth of field (EDOF) images.
The software provides functions relating to EDOF images such as parameter setting, image ON/OFF and saving and loading the images.

An included SDK (Software Development Kit) enables the integration of TAGLENS functions into customers' software.

No.	Description	Remarks
02NEA067B	Software for TAGLENS-T1, TAGPAK-E V 1	Software version V1.1 or higher is required for use in combination with the Pulsed Light Source (PLS) for TAGLENS.

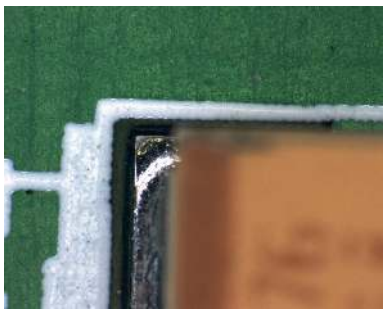

Normal microscope observation (lower)
With a height difference, only the upper or lower plane can be focused.

Normal microscope observation (upper)
With a height difference, only the upper or lower plane can be focused.

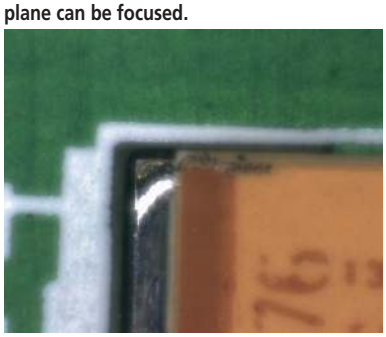

When using TAGLENS (TAGLENS ON)
TAGLENS changes the focus point at high speed. However, because the capturing time per frame is longer than the focusing time, the images will have optically mixed focus points from different heights,and the image will be blurred.

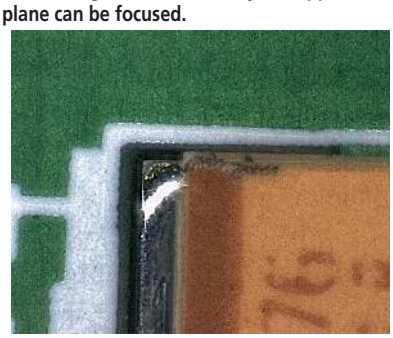

When using TAGLENS (EDOF ON)
Eliminate the blurriness caused by a change in the optical system or focus position, and you obtain an entirely sharper image. This is called the EDOF image.

All products to be sold to commercial customers.
Product illustrations are without obligation. Product descriptions, in particular any and all technical specifications, are only binding when explicitly agreed upon.

Mitutoyo

Accessories for TAGLENS

Video Microscope Unit

By integrating the TAGLENS-T1 and incorporating the objective lens with the camera enables configuring a varifocal optical system.

No.	Description
379-110	VMU-T1 for TAGLENS-T1

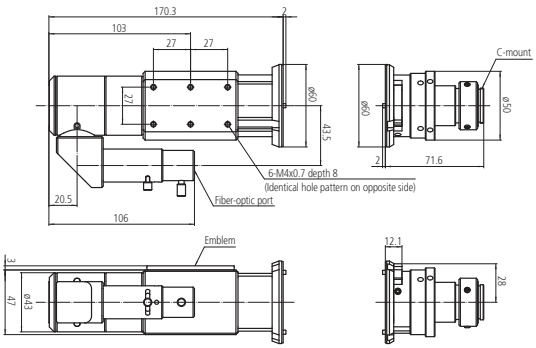

Dimensions VMU-T1

Specifications

Compatible TAGLENS	TAGLENS-T1
Imaging lens magnification	1x
Imaging area	ø11 mm
Applicable objective lenses	M Plan Apo Series

Standard accessories

No.	Description
379-010-1A	TAGLENS-T1, with TAGPAK-C

Optional accessories

No.	Description
378-801-6	M Plan APO 2X, Objective for bright-field observation in visible range
378-802-6	M Plan APO 5X
378-807-3	M Plan APO 7.5X
378-803-3	M Plan APO 10X
378-804-3	M Plan APO 20X
378-805-3	M Plan APO 50X
378-806-3	M Plan APO 100x
379-011-1A	TAGLENS-T1 E-Set, with TAGPAK-C and -E
379-200A	Pulsed Light Source (PLS), for TAGLENS-T1

All products to be sold to commercial customers.
Product illustrations are without obligation. Product descriptions, in particular any and all technical specifications, are only binding when explicitly agreed upon.

Accessories for TAGLENS

Specifications

Luminous color	White
Frequency	75 kHz or less
Maximum light output	30 lm
Input pulse width	10 ns to 85 ns
Optical pulse width	50 ns to 100 ns
Operating temperature range	5 to 40°C, 80% RH max.

Pulsed Light Source for TAGLENS

The new Pulsed Light Source (PLS) is an ultrafast LED pulse illuminator that combines with TAGLENS-T1 to achieve focused image acquisition and two-dimensional image synthesis at a desired position.
Using the PLS and TAGLENS software (TAGPAK-C), the brightness and focus position can be adjusted.

No.	Lighting system
379-200A	Pulse lighting

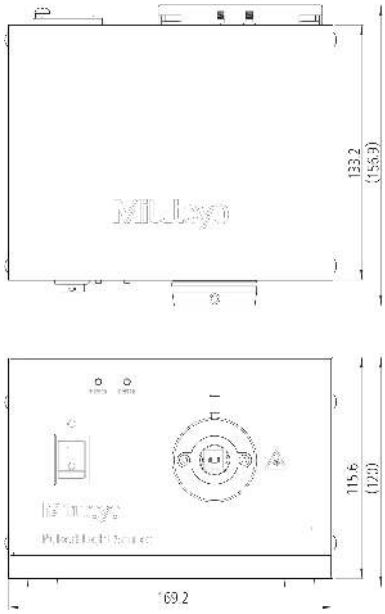

Dimensions Pulsed Light Source

All products to be sold to commercial customers.
Product illustrations are without obligation. Product descriptions, in particular any and all technical specifications, are only binding when explicitly agreed upon.

Surface Roughness Measuring Instruments
Page 475

Contour Measuring Instruments
Page 491

Surface Roughness and Contour Measuring Instruments
Formtracer
Page 496

Form Measuring Instruments
Roundtest + Roundtracer
Page 506

Styli & Arms Form Measurement
Page 521

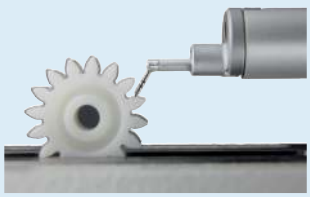

All products to be sold to commercial customers.
Product illustrations are without obligation. Product descriptions, in particular any and all technical specifications, are only binding when explicitly agreed upon.

Surftest SJ-210

Series 178 - Portable Surface Roughness Measuring Instrument

This is a portable measuring instrument that allows you to easily and accurately measure surface roughness.

The Surftest SJ-210 offers you the following benefits:

- Skid system gives you user friendly and intuitive menu navigation.
- It works independently of mains power, allowing you to make on-site measurements.
- The **6 cm** [2,4“] colour graphic, back-lit LCD gives you excellent readability.
- It performs roughness analyses conform to various international standards (EN ISO, VDA, ANSI, JIS) and customized settings.
- Different drivers expanding the range of applications.
- Calculation results, assessed profiles, bearing and amplitude curves can be displayed.
- Support of 21 languages.
- Operation by keys on the front and under the sliding cover.

SJ-210

Specifications

Drive unit	
Measuring range	16 mm, 4,8 mm [S-type]
Traverse	17,5 mm, 5,6 mm [S-type]
Measuring speed	0,25 mm/s; 0,5 mm/s; 0,75 mm/s
Detector	
Measuring method	Differential inductance
Range	360 µm
Stylus	Diamond Tip
Skid radius	40 mm
Display unit	
Profiles	Roughness Profile (R), R-Motif, DF-Profile and more
Roughness standard	EN ISO, VDA, JIS, ANSI and customize settings
Digital filter	Gauss, 2CR75, PC75
Cut-off length	λc : 0,08 mm; 0,25 mm; 0,8 mm; 2,5 mm λs : 2,5 µm; 8 µm
Tolerance	Coloured upper / lower limit
Interface	USB, Digimatic, RS-232C, Foot switch
Power supply	AC adapter or rechargeable battery

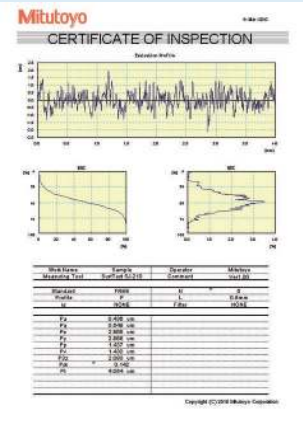

USB COMMUNICATION TOOL
as a free download on www.mitutoyo.eu registration required
(refer to page Optional Software USB Communication Tool)

Refer to Surftest SJ-210 brochure

Scan QR Code with your mobile device and watch our product videos on YouTube

Metric

Switchable between 16 languages: Japanese, English, German, French, Italian,
Spanish, Portuguese, Czech, Polish, Hungarian, Turkish, Swedish, Dutch,
Korean, Traditional Chinese, Simplified Chinese

No.	Detector measuring force [mN]	Stylus tip angle	Stylus tip radius [µm]	Description	Mass
178-560-11D	0,75	60°	2	SJ-210 model	500 g
178-562-11D	0,75	60°	2	SJ-210R model	500 g
178-564-11D	0,75	60°	2	SJ-210S model	500 g

Metric

Switchable between 16 languages: Japanese, English, Russian, Slovenian,
Rumanian, Bulgarian, Finnish, German, French, Italian, Spanish, Czech,
Polish, Hungarian, Turkish, Swedish

No.	Detector measuring force [mN]	Stylus tip angle	Stylus tip radius [µm]	Description	Mass
178-560-13D	0,75	60°	2	SJ-210 model	500 g

Standard

R-type

S-type

All products to be sold to commercial customers.
Product illustrations are without obligation. Product descriptions, in particular any and all technical specifications, are only binding when explicitly agreed upon.

Surftest SJ-210

Series 178 - Portable Surface Roughness Measuring Instrument

The SJ-210R – Retract System is a portable measuring instrument for surface roughness that includes a safety system.

- The detector starts in a safety position, not in contact with the workpiece surface. When measurement starts, the detector is lowered onto the workpiece while the drive unit moves in X measuring direction. During the return movement, the detector lifts up from the workpiece surface before returning to the start position. This is useful for avoiding stylus damage in applications where you cannot easily see the test surface.

SJ-210S (detailed information further on in this chapter)

- The SJ-210S model is a portable measuring instrument for surface roughness that has a transverse drive capability. This allows you to test shrouded surfaces in the transverse direction, such as crankshaft bearing surfaces, flanged features or deep grooves.

Keyboard protective cover open

Back view

SJ-210

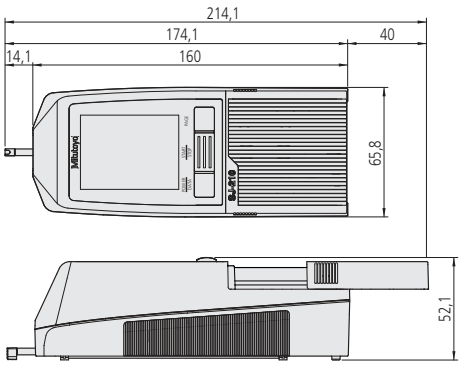

Dimensions

178-029 (displayed with SJ-210)

All products to be sold to commercial customers.
Product illustrations are without obligation. Product descriptions, in particular any and all technical specifications, are only binding when explicitly agreed upon.

Surftest SJ-310

Series 178 - Portable Surface Roughness Measuring Instrument

This is a portable measuring instrument that allows you to easily and accurately measure surface roughness.

The Surftest SJ-310 offers you the following benefits:

- Skid system with touch-screen functionality and built-in printer.
- It works independently of mains power, allowing you to make on-site measurements.
- Easy and intuitive menu navigation.
- The large **14,5 cm** [5,7"] colour LCD gives you high visibility.
- It performs roughness analyses conform to various international standards (EN ISO, VDA, ANSI, JIS) and customized settings.
- You can store up to 10 different measuring conditions inside the SJ-310, and up to 500 with an optional SD card.
- Statistical analysis and coloured tolerance judgement.
- 2 different evaluation conditions within 1 measurement adjustable.
- You can separately password protect many functions.
- It comes with support for 16 languages.

Specifications

Drive unit	
Measuring range	16 mm 4,8 mm [S-type]
Traverse	17,5 mm 5,6 mm [S-type]
Measuring speed	0,25 mm/s; 0,5 mm/s; 0,75 mm/s
Detector	
Measuring method	Differential inductance
Range	360 µm
Stylus	Diamond Tip
Skid radius	40 mm
Display unit	
Profiles	Roughness Profile (R), R-Motif, DF-Profile and more
Roughness standard	EN ISO, VDA, JIS, ANSI and customize settings
Digital filter	Gauss, 2CR75, PC75
Cut-off length	λc : 0,08 mm; 0,25 mm; 0,8 mm; 2,5 mm; 8 mm λs : 2,5 µm; 8 µm
Printer	Thermal Printer
Tolerance	Coloured upper / lower limit
Interface	USB, Digimatic, RS-232C, Foot switch
Mass	1.7 kg
Power supply	AC adapter or rechargeable battery

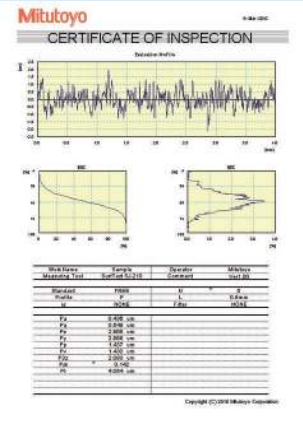

USB COMMUNICATION TOOL
as a free download on www.mitutoyo.eu registration required
(refer to page Optional Software USB Communication Tool)

Refer to Surftest SJ-310 brochure

Scan QR Code with your mobile device and watch our product videos on YouTube

Metric

No.	Detector measuring force [mN]	Stylus tip angle	Stylus tip radius [µm]	Description	Mass
178-570-11D	0,75	60°	2	SJ-310 model	1.7 kg
178-572-11D	0,75	60°	2	SJ-310R model	1.7 kg
178-574-11D	0,75	60°	2	SJ-310S model	1.7 kg

Standard

R-type

S-type

All products to be sold to commercial customers.
Product illustrations are without obligation. Product descriptions, in particular any and all technical specifications, are only binding when explicitly agreed upon.

Surftest SJ-210 and SJ-310 - S-Type

Series 178 – Portable Transverse Measurement with S-Type Drive Unit

This is an S-Type drive unit for the Surftest SJ-210 and SJ-310 that provides portable transverse measurement.

It offers you the following benefits:

- It is compatible with the conventional drive units of the Surftest SJ-210 and SJ-310.
- You can simply connected it to the display unit.
- A typical application would be to position the S-Type unit on a crankshaft journal bearing, as shown in the photograph below. Once started the S-Type drive will track the stylus across the surface transversely to its own axis and reliably measure surface roughness in the direction of the crankshaft axis. Transverse tracking simplifies the measurement of surface roughness even in very confined situations, which has long been a problem with conventional instruments which allow only longitudinal measurement.

178-234-3 S-Type Drive Unit Set: [incl. 178-233-3 - 12AAE644 - 12AAE643]

S - Type Drive Unit Set: [incl. 178-233-3 - 12AAE644 - 12AAE643]

No.	Traverse	Detector measuring force [mN]	Stylus tip angle	Stylus tip radius [µm]
178-234-3	5,6 mm	0,75	60°	2

12AAE644
V-type adapter

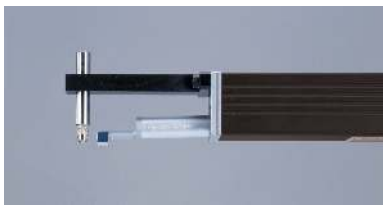

12AAE643
Point - contact adapter

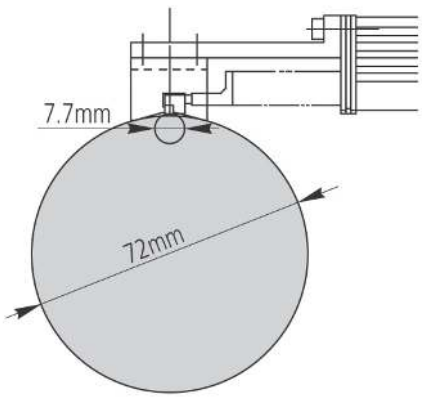

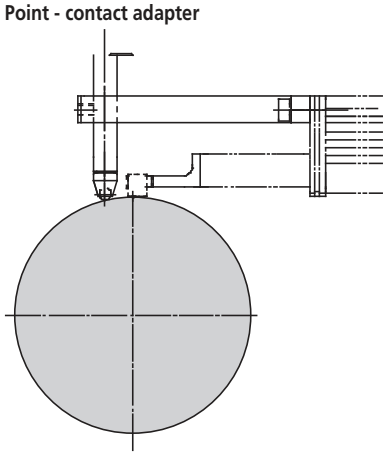

Specifications

Traverse	5,6 mm
Measuring speed	0,25 mm/s; 0,5 mm/s; 0,75 mm/s

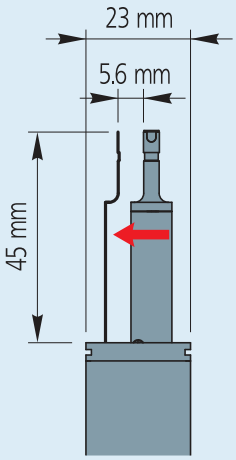

Linear movement of S-Type

All products to be sold to commercial customers.
Product illustrations are without obligation. Product descriptions, in particular any and all technical specifications, are only binding when explicitly agreed upon.

Accessories for SJ-210 and SJ-310

Series 178 - Standard and Optional Accessories for Surftest SJ-210 / SJ-310

Model		Surftest SJ-210		Surftest SJ-210R		Surftest SJ-210S		Surftest SJ-310		Surftest SJ-310R		Surftest SJ-310S	
No.	Description	Std	Opt	Std	Opt	Std	Opt	Std	Opt	Std	Opt	Std	Opt
12AAA210	Extension rod length 50 mm		●		●				●		●		
12AAA216	Height adjustment feet		●		●			●					
12AAA217	Nosepiece (flat)		●		●			●		●			
12AAA218	Nosepiece (cylindrical)		●		●			●		●			
12AAA219	Adapter for vertical position		●		●				●		●		
12AAA221	Adapter for magnetic stand		●		●		●		●		●		●
12AAA222	Height gauge adapter		●		●		●		●		●		●
12AAA882D	RS-232C connection cable								●		●		●
12AAD510	USB cable for SJ-310 / SJ-410								●		●		●
12AAE643	Point - contact adapter					●						●	
12AAE644	V-type adapter					●						●	
12AAJ088	Footswitch		●		●		●		●		●		●
12AAL066	Protective sheets for display (5 sheets)		●		●		●						
12AAL067	RS-232C cable for printer		●		●		●						
12AAN040	Protective film								●		●		●
12AAN046	Battery							●		●		●	
12AAW452	Memory card 2GB		●		●		●		●		●		●
12BAA303	Connecting cable for extension 1 m	●		●		●			●		●		●
12BAG834	Touch pen							●		●		●	
12BAK700	Calibration table	●		●		●		●		●		●	
12BAR954	AC adaptor	●		●		●							
12BAL402	Touch Panel Protection							●		●		●	
178-029*	Granite stand*		●		●		●		●		●		●
178-230-3	Standard Drive unit 17,5 mm	●			●		●	●			●		●
178-233-3	S-Type drive unit 5,6 mm		●		●	●			●		●	●	
178-235-3	R-Type drive unit 17,5 mm		●	●			●		●	●			●
178-296	Standard detector 2 µm; 0,75 mN	●		●				●		●			
178-383	Detector for small holes Ø4,5 mm; 2 µm; 0,75 mN		●		●		●		●		●		●
178-384	Detector for small holes Ø2,8mm<BR/7<Ø2,8 mm; 2 µm; 0,75 mN		●		●				●		●		●
178-385	Deep groove detector 2 µm; 0,75 mN		●		●				●		●		
178-386	Detector for S-drive 5 µm; 4 mN		●		●	●			●		●	●	
178-387	Detector for S-drive 2 µm; 0,75 mN		●		●	●			●		●	●	
178-388	Detector for gear tooth surface 2 µm; 0,75 mN		●		●		●		●		●		●
178-390	Detector 5 µm; 4 mN		●		●				●		●		
178-391	Detector for soft materials 10 µm; 4 mN		●		●				●		●		●
178-392	Detector for small holes Ø4,5 mm; 5 µm; 4 mN		●		●		●		●		●		●
178-393	Detector for small holes Ø2,8 mm; 5 µm; 4 mN		●		●		●		●		●		●
178-394	Deep groove detector 5 µm; 4 mN		●		●				●		●		
178-398	Detector for geartooth surface 5 µm; 4 mN; 90°		●		●		●		●		●		●
178-421D	Printer set for SJ-210 with cable and battery		●		●		●						
178-423D	Printer for SJ-210 with cable		●		●		●						
178-601	Roughness specimen Ra 3 µm	●		●			●	●		●		●	
178-604	Roughness specimen Ra 0,4 µm /3 µm		●		●		●		●		●		●
178-605	Roughness specimen Ra 1 µm		●		●	●			●		●	●	
270732	Printer papers (5 rolls)		●		●		●	●		●		●	
357651	AC Adapter 12V							●		●		●	
63AAA211	USB cable for SJ-210		●		●		●						

All products to be sold to commercial customers.
Product illustrations are without obligation. Product descriptions, in particular any and all technical specifications, are only binding when explicitly agreed upon.

Mitutoyo

Accessories for SJ-210 and SJ-310

Series 178

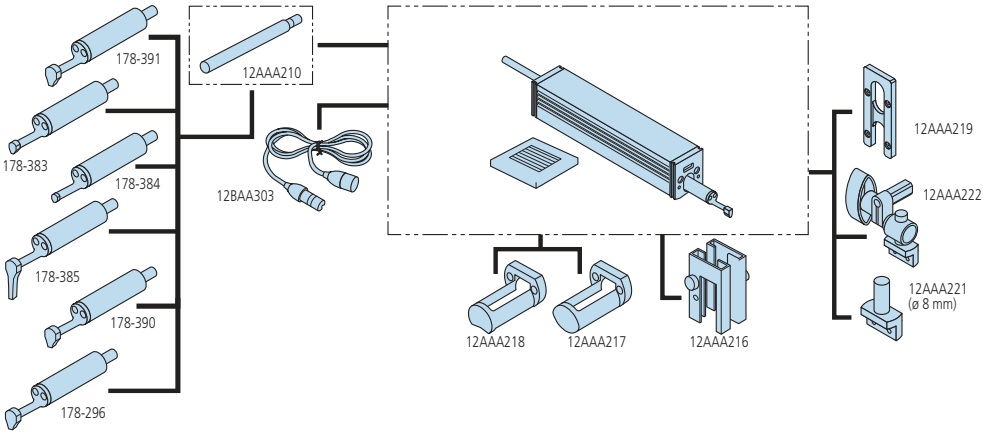

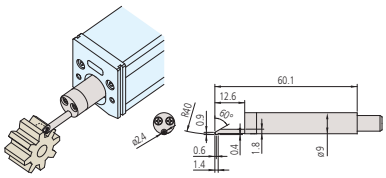

178-388/178-398

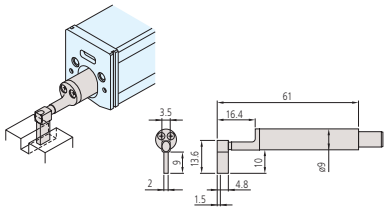

178-385/178-394

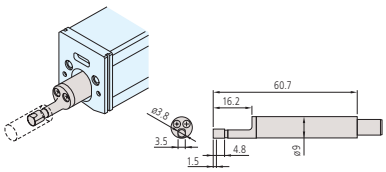

178-383/178-392

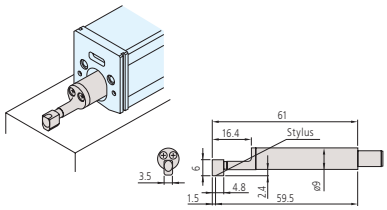

178-390/178-387
178-296/178-386

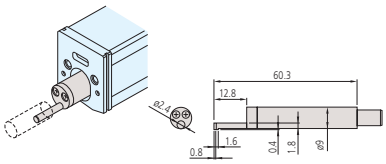

178-384/178-393

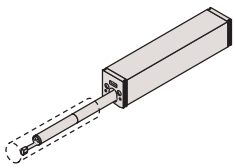

12AAA210

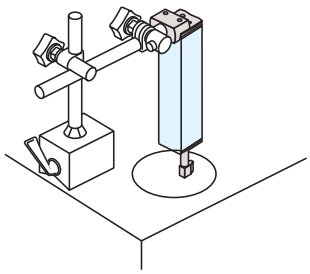

12AAA221

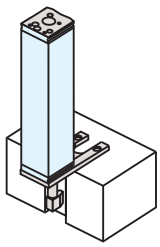

12AAA219

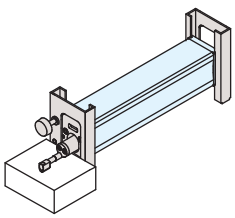

12AAA216

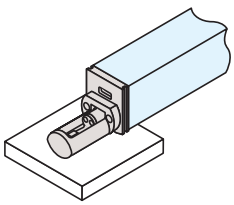

12AAA217

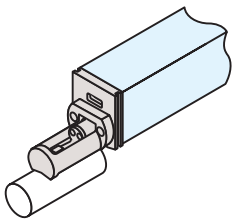

12AAA218

Optional accessories

No.	Description
178-033	Device for cylindrical workpieces, for Surftest SJ-210 / SJ-310
178-034	Device as universal fixture
178-035	Device for measuring inside diameter

178-029

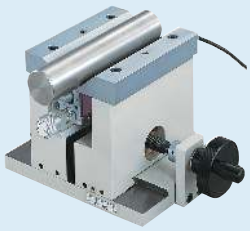

178-033

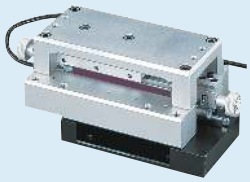

178-034

178-035

All products to be sold to commercial customers.
Product illustrations are without obligation. Product descriptions, in particular any and all technical specifications, are only binding when explicitly agreed upon.

Surftest SJ-410

Series 178 - Portable Surface Roughness Measuring Instrument

This is a portable measuring instrument that allows you to easily and accurately measure surface roughness.

The Surftest SJ-410 offers you the following benefits:

- Skidless system with touch-screen functionality and built-in printer.
- It works independently of mains power, allowing you to make on-site measurements.
- Easy and intuitive menu navigation.
- The large **14,5 cm** [5,7"] colour LCD gives you high visibility.
- The skidless detector allows you to measure the primary profile (P), roughness profile (R), waviness profile (W) and more.
- Surface compensation of curved, radial and tilted surfaces.
- It performs roughness analyses conform to various international standards (EN ISO, VDA, ANSI, JIS) and customized settings.
- You can store up to 10 different measuring conditions inside the SJ-410, and up to 500 with an optional SD card.
- It allows two different evaluation conditions within one measurement adjustable.
- You can separately password protect many functions.
- It comes with support for 16 languages.
- Available options include an auto-set unit, X-axis fine adjustment and digital levelling unit.

SJ-410

Specifications

Drive unit	
Traverse	SJ-411: 25 mm SJ-412: 50 mm
Measuring speed	0,05 mm/s; 0,1 mm/s; 0,2 mm/s; 0,5 mm/s; 1 mm/s
Detector	
Measuring method	Skidless - Differential inductance
Range	800 µm; 80 µm; 8 µm (bis zu 2,4 mm mit optionalem Taster)
Positioning	±1,5° (tilting), 10 mm (up/down)
Display unit	
Profiles	Primary Profile (P), Roughness Profile (R), Waviness (W), MOTIF (R, W) and more
Standard	EN ISO, VDA, JIS, ANSI and customize settings
Analysis graphs	BAC, ADC
Digital filter	Gauss, 2CR75, PC75
Cut-off length	λc : 0,08 mm; 0,25 mm; 0,8 mm; 2,5 mm; 8 mm λs : 2,5 µm; 8 µm; 25 µm
Printer	Thermal Printer
Tolerance	Coloured upper / lower limit
Interface	USB, Digimatic, RS-232C, Foot switch
Power supply	AC adapter or rechargeable battery

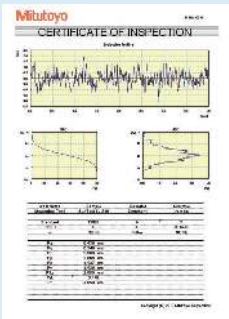

USB COMMUNICATION TOOL
as a free download on www.mitutoyo.eu registration required
(refer to page Optional Software USB Communication Tool)

Refer to Surftest SJ-410 brochure

Scan QR Code with your mobile device and watch our product videos on YouTube

Surftest SJ-411
Traverse : 25 mm
Traverse straightness : 0.3 µm / 25 mm

No.	Detector measuring force [mN]	Stylus tip angle	Stylus tip radius [µm]
178-580-11D	0,75	60°	2
178-580-12D	4	90°	5

Surftest SJ-412
Traverse : 50 mm
Traverse straightness : 0.5 µm / 50 mm

No.	Detector measuring force [mN]	Stylus tip angle	Stylus tip radius [µm]
178-582-11D	0,75	60°	2
178-582-12D	4	90°	5

All products to be sold to commercial customers.
Product illustrations are without obligation. Product descriptions, in particular any and all technical specifications, are only binding when explicitly agreed upon.

Surftest SJ-410

Series 178 - Portable Surface Roughness Measuring Instrument

Optional leveling table (178-048)

R-surface measurement

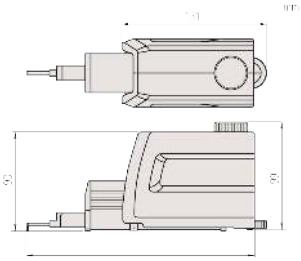

SJ-411: 207,5 mm / SJ-412: 234 mm
Drive unit

Optional:
- Autoset unit 178-010
- X-axis adjustment unit 178-020
- Digital leveling unit 178-030

Scope of delivery

178-039
(displayed with SJ-411)

Optional accessories	Other optional and standard accessories are listed later in different sections for accessories and styli.

Optional accessories

No.	Description
02AZD790D	U-WAVE-T Connection Cable D, Flat 10-Pin Type
12AAB358	Cylinder attachment Ø15-60mm
12AAD510	USB cable for SJ-310 / SJ-410 series
178-019	Precision vise
178-039	Granite stand, for SJ-410
178-042-1	Digital XY leveling table [mm], Leveling range +/- 1,5°; 25 x 25mm
178-043-1	XY leveling table [mm], Leveling range +/- 1,5°; 25 x 25mm
178-047	Digital three-axis adjustment table
178-048	Leveling table D.A.T
178-396-2	Detector, 0,75mN
178-397-2	Detector, 4mN
178-605	Roughness specimen Ra 1µm [mm], Ra 1µm
178-610	Step gauge, (1, 2, 5, 10)µm
178-611	Step gauge, mm, (2, 10)µm
936937	Digimatic Cable, Flat 10-Pin Type, 1m
965014	Digimatic Cable, Flat 10-Pin Type, 2m
12AAW452	Memory card 2GB, for SJ-210

Consumable spares

No.	Description
12AAN046	Replacement battery, for Surftest SJ-310 / SJ-410
12BAL402	Touch Panel Protecting Sheet
270732	Printer paper, 5 rolls SJ series / SV-2100

12AAB358
Cylinder attachment

178-048
Leveling table D.A.T.

All products to be sold to commercial customers.
Product illustrations are without obligation. Product descriptions, in particular any and all technical specifications, are only binding when explicitly agreed upon.

Surftest SJ-500

Series 178 - Surface Roughness Measuring Instrument

This is a measuring instrument that allows you to easily and accurately measure surface roughness.

The Surftest SJ-500 offers you the following benefits:

- The skidless detector allows you to measure the primary profile (P), roughness profile (R), waviness profile (W) and more.
- User friendly control unit for high precision surface roughness measurement.
- The large **19 cm** [7,5”] colour TFT LCD with touch-screen functionality gives you high visibility and ease of use.
- The display menu is easy to read and simple to operate.
- It performs roughness analyses conform to various international standards (EN ISO, VDA, ANSI, JIS) and customized settings.
- The built-in joystick on the control unit enables quick and easy positioning. The manual adjustment knob allows you to finely position a small stylus to measure the inside surface of small holes.
- The detector unit allows a 90° displacement of the stylus, which is ideal for crankshaft and narrow space measurement.
- You can use the instrument stand-alone or mounted on a stand.

SJ-500

No.	Detector measuring force [mN]	Stylus tip angle	Stylus tip radius [µm]
178-532-01D	0,75	60°	2
178-532-02D	4	90°	5

SJ-500 with optional manual column stand

Preview

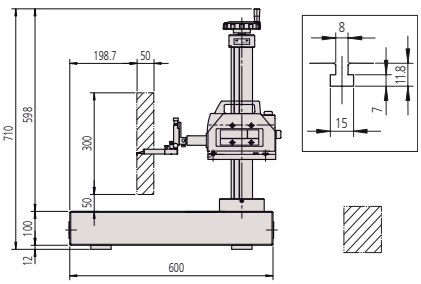

178-085
600x450x710 mm

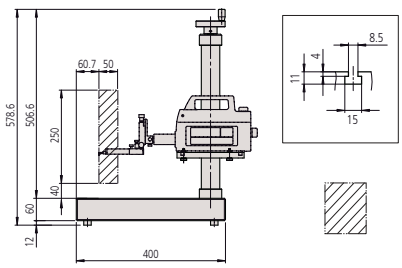

178-089
400x250x578 mm

Specifications

Drive unit	
Traverse	50 mm
Measuring speed	0,02 - 5 mm/s
Drive speed	0 - 20 mm/s or joystick operation
Traverse straightness	0,2 µm / 50 mm
Detector	
Range	800 µm; 80 µm; 8 µm (bis zu 2,4 mm mit optionalem Taster)
Positioning	±1,5° (tilting) 30 mm (up/down)
Measuring method	Skidless - Differential inductance
Display unit	
Profiles	Primary Profile (P), Roughness Profile (R), Waviness (W), MOTIF (R, W) and more
Standard	EN ISO, VDA, JIS, ANSI and customize setting
Analysis graphs	BAC, ADC
Digital filter	Gauss, 2CR75, PC75, RobustSpline
Cut-off length	λc : 0,025 mm; 0,08 mm; 0,25 mm; 0,8 mm; 2,5 mm; 8 mm; 25 mm λs : 0,25 µm; 0,8 µm; 2,5 µm; 8 µm; 25 µm; 80 µm; 250 µm; None λf : 0,08 mm; 0,25 mm; 0,8 mm; 2,5 mm; 8mm; 25mm; None
Printer	Thermal printer

Optional accessories

No.	Description
12AAG202	Extension rod, 50mm
12AAG203	Extension rod, 100mm
178-042-1	Digital XY leveling table [mm], Leveling range +/- 1,5°; 25 x 25mm
178-043-1	XY leveling table [mm], Leveling range +/- 1,5°; 25 x 25mm
178-047	Digital three-axis adjustment table
178-048	Leveling table D.A.T
178-085	Granite stand 600 x 450 x 710mm
178-089	Granite stand 400 x 250 x 578mm
178-093-1	Desktop vibration isolator pump type, with max loading mass 120kg
178-396-2	Detector, 0,75mN
178-397-2	Detector, 4mN

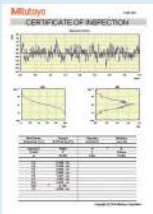

USB COMMUNICATION TOOL
as a free download on www.mitutoyo.eu registration required
(refer to page Optional Software USB Communication Tool)

Refer to SURFACE MEASUREMENT brochure

All products to be sold to commercial customers.
Product illustrations are without obligation. Product descriptions, in particular any and all technical specifications, are only binding when explicitly agreed upon.

Mitutoyo

Surftest SV-2100

Series 178 - Surface Roughness Measuring Instrument

This is a stationary measuring instrument that allows you to easily and accurately measure surface roughness.

The Surftest SV-2100 offers you the following benefits:

- It is mounted on a granite base with a manual or power column.
- The large **19 cm** [7,5“] colour TFT LCD gives you high visibility and touch-screen functionality.
- It has a user friendly display unit for high precision surface roughness measurement.
- It performs roughness analyses conform to various international standards (EN ISO, VDA, ANSI, JIS) and customized settings.
- Designed for usage in workshop areas.

SV-2100S4

SV-2100M4

SV-2100H4 model
Vertical travel : 550 mm power column
Granite base size (WxD) : 600 x 450 mm

No.	Detector measuring force [mN]	Stylus tip angle	Stylus tip radius [µm]
178-682-01D	0,75	60°	2

SV-2100M4 model
Vertical travel : 350 mm manual column
Granite base size (WxD) : 600 x 450 mm

No.	Detector measuring force [mN]	Stylus tip angle	Stylus tip radius [µm]
178-636-01D	0,75	60°	2

SV-2100S4 model
Vertical travel : 350 mm power column
Granite base size (WxD) : 600 x 450 mm

No.	Detector measuring force [mN]	Stylus tip angle	Stylus tip radius [µm]
178-680-01D	0,75	60°	2

SV-2100W4 model
Vertical travel : 550 mm power column
Granite base size (WxD) : 1000 x 450 mm

No.	Detector measuring force [mN]	Stylus tip angle	Stylus tip radius [µm]
178-684-01D	0,75	60°	2

Specifications

Drive unit	
Traverse	100 mm
Measuring speed	0,02 - 5 mm/s
Drive speed	X = 0-40 mm/s Z2 = 0-20 mm/s [S4, H4, W4] or joystick operation
Traverse straightness	0,15 µm / 100 mm
Detector	
Range	8
Measuring method	Skidless - Differential inductance
Display unit	
Profiles	Primary Profile (P), Roughness Profile (R), Waviness (W), MOTIF (R, W) and more
Standard	EN ISO, VDA, JIS, ANSI and customize settings
Analysis graphs	BAC, ADC
Digital filter	Gauss, 2CR75, PC75, RobustSpline
Cut-off length	λc : 0,025 mm; 0,08 mm; 0,25 mm; 0,8 mm; 2,5 mm; 8 mm; 25 mm; 80 mm λs : 0,25 µm; 0,8 µm; 2,5 µm; 8 µm; 25 µm; 80 µm; 250 µm; none λf : 0,08 mm; 0,25 mm; 0,8 mm; 2,5 mm; 8 mm; 25 mm; 80 mm; none
Printer	Thermal printer

Optional accessories

No.	Description
12AAG202	Extension rod, 50mm
12AAG203	Extension rod, 100mm
218-001	Cross-travel table [mm], 100 x 50mm XY travel
218-003	Rotary vise

Preview

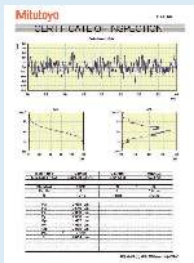

Software
USB COMMUNICATION TOOL
as a free download on www.mitutoyo.eu registration required
(refer to page
Optional Software USB Communication Tool)

Refer to SURFACE MEASUREMENT brochure

All products to be sold to commercial customers.
Product illustrations are without obligation. Product descriptions, in particular any and all technical specifications, are only binding when explicitly agreed upon.

Surftest SJ-500P

Series 178 - Surface Roughness Measuring Instruments with Software FORMTRACEPAK

These are surface roughness measuring instruments with software FORMTRACEPAK.

Software FORMTRACEPAK offers you the following benefits:

- It performs roughness analyses conform to various international standards (EN ISO, VDA, ANSI, JIS) and customized settings.
- It can be used for several contour calculations within the measuring range.
- It offers total support for measurement system control, analysis and inspection report.
- All advantages of the SJ-500 also apply to the P Type.

SJ-500P

No.	Detector measuring force [mN]	Stylus tip angle	Stylus tip radius [µm]
178-534-11	0,75	60°	2

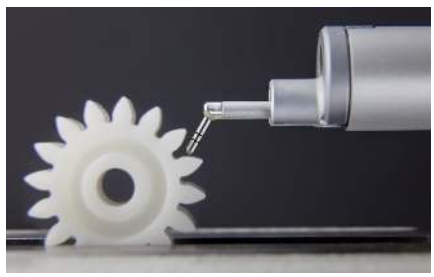

Specifications

Drive unit	
Traverse	50 mm
Drive speed	0-20 mm/s
Measuring speed	0,02 - 5 mm/s
Traverse straightness	0,2 µm / 50 mm
Detector	
Measuring method	Skidless - Differential inductance
Range	800 µm; 80 µm; 8 µm (bis zu 2,4 mm mit optionalem Taster)
Positioning	±1,5° (tilting) 30 mm (up/down)
Software	**FORMTRACEPAK**

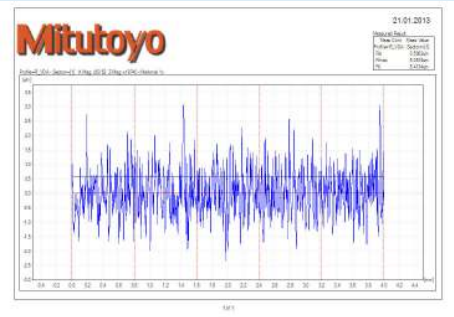

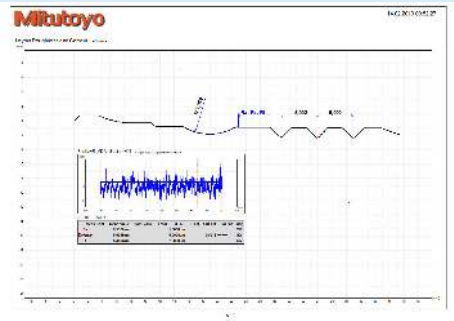

Formtracepak layout

All products to be sold to commercial customers.
Product illustrations are without obligation. Product descriptions, in particular any and all technical specifications, are only binding when explicitly agreed upon.

Surftest SV-2100P

Series 178 - Surface Roughness Measuring Instruments with Software FORMTRACEPAK

These are surface roughness measuring instruments with software FORMTRACEPAK.

Software FORMTRACEPAK offers you the following benefits:

- It performs roughness analyses conform to various international standards (EN ISO, VDA, ANSI, JIS) and customized settings.
- It can be used for several contour calculations within the measuring range.
- It offers total support for measurement system control, analysis and inspection report.
- All advantages of the SV-2100 also apply to the P Type.

SV-2100P

No.	Detector measuring force [mN]	Stylus tip angle	Stylus tip radius [µm]
178-638-11	0,75	60°	2

Specifications

Drive unit	
Traverse	100 mm
Drive speed	X = 0-40 mm/s
Measuring speed	0,02 - 5 mm/s
Traverse straightness	0,15 µm / 100 mm
Detector	
Measuring method	Skidless - Differential inductance
Range	800 µm; 80 µm; 8 µm (bis zu 2,4 mm mit optionalem Taster)
Software	**FORMTRACEPAK**

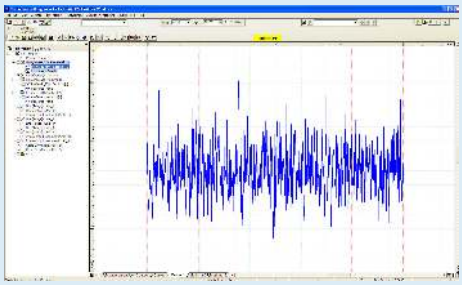

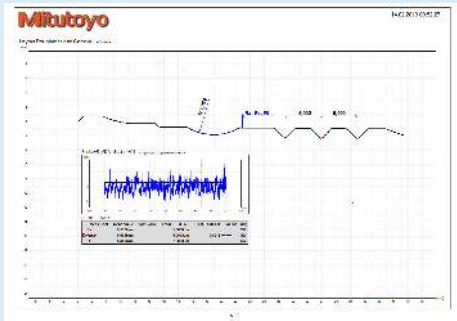

Formtracepak layout

Refer to SURFACE MEASUREMENT brochure

All products to be sold to commercial customers.
Product illustrations are without obligation. Product descriptions, in particular any and all technical specifications, are only binding when explicitly agreed upon.

Formtracer Avant FTA-S3000

Serie 178 - Surface Roughness Measuring Instrument with Software FORMTRACEPAK

The Formtracer Avant FTA-S3000 is the next-generation surface roughness measuring machine that boasts outstanding operability and a wide variety of measurement functions because of the further expansion of the optional equipment range.

The Formtracer Avant FTA-S3000 offers you the following benefits:

- Easy to operate
- High-accuracy surface roughness testers
- A large range of optional styli ensure access to restricted features
- Remote control box for quick and accurate machine positioning
- The detector holders (optional) enables both crank and /or upward measurement
- 3D/Y-axis table (optional) with a travel range of 100 mm enables 3D surface roughness measurement
- DAT unit (optional) can tilt the X-axis drive unit to allow a workpiece to be levelled easily
- Retrofit options for contour measurement
- X-axis tilting

Specifications

Traverse	100 mm / 200 mm
Measuring speed	0,02-30 mm/s
Range	800 µm; 80 µm; 8 µm (up to 2,4 mm with an optional stylus) µm
Drive speed	X = 0-80 mm/s Z2 = 0-40 mm/s
Inclining range	±45°
Vertical travel	300 mm / 500 mm / 700 mm
Standard	EN ISO, VDA, JIS, ANSI and customize setting
Profiles	Primary Profile (P), Roughness Profile (R), Waviness (W), MOTIF (R, W) and more
Software	**FORMTRACEPAK** • Enables control of all axes and rotary table for realizing efficient measurement automation. • Perform surface roughness evaluation. • Able to create an original inspection certificate by setting the print format to suit particular requirements.

Detector Holder S-3000C

Detector holder S-3000CR

Detector holder S-3000MR

FTA-S3000

All products to be sold to commercial customers.
Product illustrations are without obligation. Product descriptions, in particular any and all technical specifications, are only binding when explicitly agreed upon.

Formtracer Avant FTA-S3000

Serie 178 - Surface Roughness Measuring Instrument with Softwrae FORMTRACEPAK

Metric

Traverse: 100 mm

Model	FTA - S4 S3000	FTA - H4 S3000	FTA - W4 S3000	FTA - L4 S3000
No.	**178-151-11**	**178-152-11**	**178-153-11**	**178-154-11**
Range µm	800 µm; 80 µm; 8 µm (up to 2,4 mm with an optional stylus)	800 µm; 80 µm; 8 µm (up to 2,4 mm with an optional stylus)	800 µm; 80 µm; 8 µm (bis zu 2,4 mm mit optionalem Tastele-ment)	800 µm; 80 µm; 8 µm (bis zu 2,4 mm mit optionalem Tastele-ment)
Granite base size (WxD) [mm]	600 x 450	600 x 450	1000 x 450	1000 x 450
Detector measuring force mN	0,75	0,75	0,75	0,75
Mass [kg]	140	150	220	270

Metric

Traverse: 200 mm

Model	FTA - S8 S3000	FTA - H8 S3000	FTA - W8 S3000	FTA - L8 S3000
No.	**178-156-11**	**178-157-11**	**178-158-11**	**178-159-11**
Range µm	800 µm; 80 µm; 8 µm (up to 2,4 mm with an optional stylus)	800 µm; 80 µm; 8 µm (up to 2,4 mm with an optional stylus)	800 µm; 80 µm; 8 µm (up to 2,4 mm with an optional stylus)	800 µm; 80 µm; 8 µm (up to 2,4 mm with an optional stylus)
Granite base size (WxD) [mm]	600 x 450	600 x 450	1000 x 450	1000 x 450
Detector measuring force mN	0,75	0,75	0,75	0,75
Mass [kg]	140	150	220	270

Formtracer Avant FTA-S3000
with vibration isolator and side table

Optional accessories

No.	Description
12AAD975	Theta-1 axis, Rotary Axis
12AAG202	Extension rod, 50mm
12AAG203	Extension rod, 100mm
12AAV701	Detector stand for retrofit
178-050	DAT unit
178-077	3D leveling table
178-078	Theta-2 axis, Rotary Axis
178-096	3 D/Y-axis table
178-097	Y-axis table
178-141	Detector holder S3000C-D
178-142	Detector holder S3000CR-D set
178-143	Detector holder S3000MR-D set
178-181	Side table
178-188	Vibration isolator standard base
178-189	Vibration isolator wide base
178-397-2	Detector, 4mN
178-611	Step gauge, mm, (2, 10)µm
218-261-11	C3200 retrofit kit [mm]
218-271-11	C4500 retrofit kit [mm]

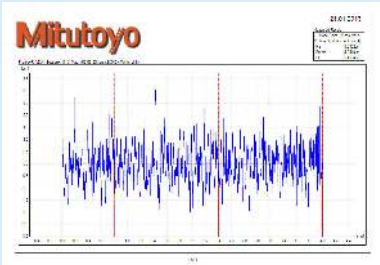

Formtracepak Layout

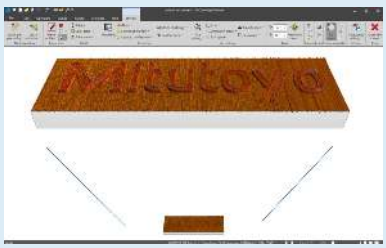

Optional MCubeMap
(in combination with 3D Y-axis 178-096)

All products to be sold to commercial customers.
Product illustrations are without obligation. Product descriptions, in particular any and all technical specifications, are only binding when explicitly agreed upon.

Surftest Extreme SV-3000CNC

Series 178 – CNC Surface Roughness Measuring Instrument

These is a fully CNC surface roughness measuring instrument with powerful software FORMTRACEPAK.

The Surftest Extreme SV-3000CNC offers you the following benefits:

- It is perfectly made for increased throughput of multiple profile and workpiece measurement tasks.
- Each axis has a drive speed of up to 200 mm/s.
- You can take continuous measurement over horizontal and inclined surfaces by power-tilting the drive unit.
- Within the measuring range of the styli software FORMTRACEPAK supports contour calculation features.
- 3D topography measurement as option available.
- Inclined plane measurement is possible through 2-axis simultaneous control in the X and Y directions.
- The detector unit incorporates an anti-collision safety device, causing it to automatically stop if its main body collides with a workpiece or jig.
- All models equipped with Y-axis.
- Z-axis tracking measurement for models without α-axis.

Specifications

Traverse	X = 200 mm Y = 200 mm
Measuring speed	0,02 - 2 mm/s
Drive speed	CNC mode: max. 200 mm/s Joystick mode: 0 - 50 mm/s
Traverse straightness	0,5 µm / 200 mm
Inclining range	-45° (CCW) to +10° (CW)
Range	800 µm; 80 µm; 8 µm (up to 2,4 mm with an optional stylus)
Standard	EN ISO, VDA, JIS, ANSI and customize setting
Profiles	Primary Profile (P), Roughness Profile (R), Waviness (W), MOTIF (R, W) and more
Software	**FORMTRACEPAK** • Allows control of all axis, motor-driven Y-axis table and optional rotary table for efficient automated measurement. • Surface roughness analysis • An inspection certificate can be created by setting the print format as required.
Optional accessories	Other optional and standard accessories are listed later in different sections for accessories and styli.

Optional accessories

No.	Description
12AAD975	Theta-1 axis, Rotary Axis
12AAE032	Special anti-vibration table
178-037	2D auto-leveling table, for CNC Surftest and Formtracer
178-077	3D leveling table
178-078	Theta-2 axis, Rotary Axis

Refer to SURFACE MEASUREMENT brochure

SV-3000CNC

Model	SV-3000CNC-S	SV-3000CNC-H	SV-3000CNC-S.	SV-3000CNC-H.
No.	**178-508-12**	**178-509-12**	**178-528-12**	**178-529-12**
Z2-axis range [mm]	300	300	500	500
Y-axis table unit	Installed	Installed	Installed	Installed
α-axis unit	-	Installed	-	Installed

Automatic measurement

All products to be sold to commercial customers.
Product illustrations are without obligation. Product descriptions, in particular any and all technical specifications, are only binding when explicitly agreed upon.

Mitutoyo

Surftest Extreme SV-M3000CNC

Series 178 - CNC Surface Roughness Measuring Instrument

This is a top performance CNC surface roughness measuring instrument with powerful software FORMTRACEPAK.

The Surftest Extreme SV-M3000CNC offers you the following benefits:

- You can measure large and heavy workpieces such as engine blocks and crankshafts.
- It has an 800mm moving column configuration to largely eliminate workpiece size restrictions.
- Each axis has a drive speed of up to 200 mm/s.
- When combined with the optional detector swivelling unit, continuous measurement over the bottom, top and side surface of a workpiece is possible.
- The huge load table has a self-contained structure ensuring that you can easily accommodate various size workpieces, standard and custom jigs, and auto-feed devices.

No.	Model	Detector hold type (Essential option)
178-549-2	178-071 178-072 178-073	Standard Long type Rotary type

Typical measurement task

Specifications

Traverse	X = 200 mm Y = 800 mm Z2 = 500 mm
Measuring speed	0,02 - 2 mm/s
Drive speed	CNC mode: max. 200 mm/s Joystick mode: 0 - 50 mm/s
Traverse straightness	X = 0,5 µm / 200 mm (standard) X = 0,7 µm / 200 mm (long-type detector) X = 0,5 µm / 200 mm (rotary-type detector) Y = 0,5 µm / 50 mm; 2 µm / 800 mm (standard) Y = 0,7 µm / 50 mm; 3 µm / 800 mm (long-type detector) Y = 0,7 µm / 50 mm; 3 µm / 800 mm (rotary-type detector)
Inclining range	-45° (CCW) to +10° (CW)
Range	800 µm; 80 µm; 8 µm (up to 2,4 mm with an optional stylus)
Standard	EN ISO, VDA, JIS, ANSI and customize setting
Profiles	Primary Profile (P), Roughness Profile (R), Waviness (W), MOTIF (R, W) and more
Loading weight	300 kg
Software	**FORMTRACEPAK** • Enables control of all axes for realizing efficient measurement automation. • Perform roughness evaluation. • Able to create an original inspection certificate by setting the print format to suit particular requirements.

Refer to SURFACE MEASUREMENT brochure

All products to be sold to commercial customers.
Product illustrations are without obligation. Product descriptions, in particular any and all technical specifications, are only binding when explicitly agreed upon.

Contracer CV-2100

Series 218 - Contour Measuring Instruments

This contour measuring instrument is designed to support "easy to use" and "speedy" measurements.

The Contracer CV-2100N4 and CV-2100M4 offer you the following benefits:

- Extensive contour measurement quick and easy.
- Quick movement in Z2 because of an easy to use quick grip. [M4 type]
- Auto execution and multi point measurement with the new stylus up-and down function.
- X-axis drive up to 20 mm/s by jog shuttle.
- Easy part programming as well as single measurement with software FORMTRACEPAK.
- Automatic evaluation, best fit of contours, CAD comparison and many more features as standard.
- CV-2100 M4 mounted with quick grip stand on a granite base.
- CV-2100 N4 can be mounted on an optional granite base with a manual column.
- Centralized front control panel.

Specifications

Measuring range	Z1 = 50 mm X = 100 mm
Measuring speed	0,02 - 5 mm/s
Drive speed	X = 0 - 20 mm/s
Accuracy	X = (2,5 + 0,02L) µm [L: drive length (mm)] Z1 = (2,5 + I0,1HI) µm [H: Measurement height from the horizontal position (mm)]
Traverse straightness	2,5 µm / 100 mm
Column type	M4: 350 mm
Software	**FORMTRACEPAK** • Allows control of measuring conditions for efficient automated measurement. • Contour evaluation can be performed using analysis of level differences, angle, pitch, area and contour tolerancing as standard. • An inspection certificate can be created by setting the print format as required.
Optional accessories	Other optional and standard accessories are listed later in different sections for accessories and styli.

Optional accessories

No.	Description
218-001	Cross-travel table [mm], 100 x 50mm XY travel
218-003	Rotary vise
218-042	Column Stand, for CV-2100N4

CV-2100M4
(with optional 218-001 and 218-003)

CV-2100N4

All products to be sold to commercial customers.
Product illustrations are without obligation. Product descriptions, in particular any and all technical specifications, are only binding when explicitly agreed upon.

Mitutoyo

Contracer CV-2100

Model	CV-2100N4	CV-2100M4
No.	**218-613D**	**218-633D**
Z2-axis range [mm]	-	350
Z1-axis range [mm]	50	50
Z2-axis column type	Optional: Manual	Manual: Quick up-and-down motion, fine feed
X1-axis range [mm]	100	100

CV-2100 stylus up-and-down function

CV-2100M4 with column and quick grip

Easy and quick movement in Z2

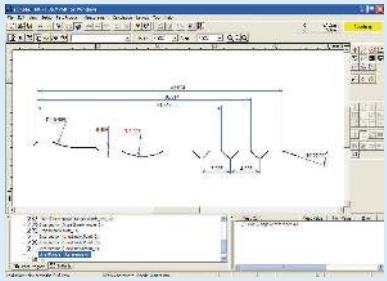

FORMTRACEPAK

Optional column stand 218-042

Refer to CV-2100 brochure

Scan QR Code with your mobile device and watch our product videos on YouTube

All products to be sold to commercial customers.
Product illustrations are without obligation. Product descriptions, in particular any and all technical specifications, are only binding when explicitly agreed upon.

Formtracer Avant FTA-C3000 and FTA-C4000

Specifications

Vertical travel [mm]	Z2 = 300 / 500 / 700
Traverse	100 mm / 200 mm
Measuring range	Z1 = 60 mm
Measuring speed	0,02 - 30 mm/s
Drive speed	X = 0 - 80 mm/s Z2 = 0 - 30 mm/s
Inclining range	±45°
Accuracy	X = (0,8+0,01L) µm (S4, H4, W4, L4 model) X = (0,8+0,015L) µm (S8, H8, W8, L8 model) [L : Drive length (mm)] **FTA-C3000 :** Z1 = (1,2+2H/100) µm **FTA-C4000 :** Z1 = (0,8+2H/100) µm [H : Measurement height from the horizontal position (mm)]
Software	**FORMTRACEPAK** • Allows control of all axis, optional motor-driven Y-axis table and rotary table for efficient automated measurement. • Contour evaluation can be performed using analysis of level differences, angle, pitch, area and contour tolerancing as standard. • An inspection certificate can be created by setting the print format as required.
Optional accessories	Other optional and standard accessories are listed later in different sections for accessories and styli.

Formtracer Avant FTA-C3000 and FTA-C4000

Serie 218 – Contour Measuring Instruments

These are high-accuracy 2D contour measuring instruments as single or dual stylus system. The Avant FTA-C3000 and FTA-C4000 series are benchtop machines and come with a motorised granite column and stand.

The Formtracer Avant FTA-C3000 and FTA-C4000 offers you the following benefits:

- Easy to operate
- Accurate measurement of small features
- Large vertical range and very high resolution
- A large range of optional arms and styli ensures access to restricted features
- Remote control box for quick and accurate machine positioning
- Magnetic joint for a quick change of arms - quick and simple calibration
- Simplified CNC operation
- Optional motorised accessories
- Retrofit options for surface roughness measurement

Formtracer Avant FTA-C4000
with vibration isolator and side table

All products to be sold to commercial customers.
Product illustrations are without obligation. Product descriptions, in particular any and all technical specifications, are only binding when explicitly agreed upon.

Formtracer Avant FTA-C3000 and FTA-C4000

Formtracer Avant FTA-C3000 series

A high-accuracy 2D contour measuring instrument; the Avant C3000 is a benchtop machine and comes with a motorised granite column and stand.

The Formtracer Avant FTA-C3000 offers you the following benefits:

- Easy to operate
- Accurate measurement of small features
- Large vertical range and very high resolution
- A large range of optional arms and styli ensures access to restricted features
- Remote control box for quick and accurate machine positioning
- Magnetic joint for a quick change of arms - quick and simple calibration
- Simplified CNC operation
- Optional motorised accessories
- Retrofit options for surface roughness measurement

Metric Traverse: 100 mm

Model	FTA - S4 C3000	FTA - H4 C3000	FTA - W4 C3000	FTA - L4 C3000
No.	**218-361-11**	**218-362-11**	**218-363-11**	**218-364-11**
Z1-axis range [mm]	60	60	60	60
Granite base size (WxD) [mm]	600 x 450	600 x 450	1000 x 450	1000 x 450
Vertical travel [mm]	300	500	500	700

Metric Traverse: 200 mm

Model	FTA - S8 C3000	FTA - H8 C3000	FTA - W8 C3000	FTA - L8 C3000
No.	**218-366-11**	**218-367-11**	**218-368-11**	**218-369-11**
Z1-axis range [mm]	60	60	60	60
Granite base size (WxD) [mm]	600 x 450	600 x 450	1000 x 450	1000 x 450
Vertical travel [mm]	300	500	500	700

FTA-C3000

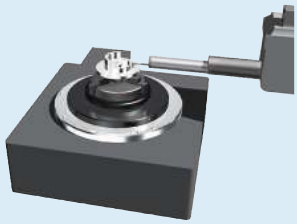

Optional Rotary table θ1 - 12AAD975

Optional Rotary table θ2 - 178-078

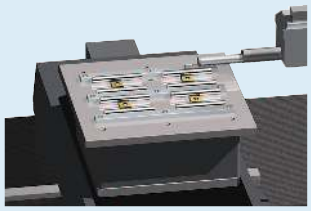

Optional Y-axis - 178-097

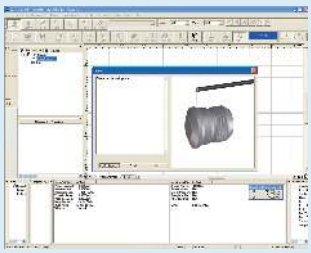

Measurement control screen

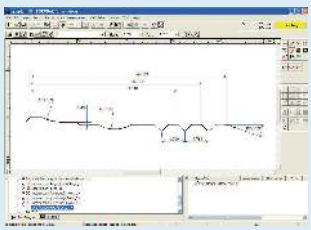

Contour analysis screen

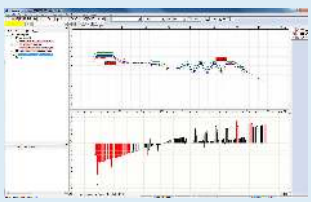

Contour comparison
FORMTRACEPAK

Refer to CONTOUR MEASUREMENT brochure

All products to be sold to commercial customers.
Product illustrations are without obligation. Product descriptions, in particular any and all technical specifications, are only binding when explicitly agreed upon.

Formtracer Avant FTA-C3000 and FTA-C4000

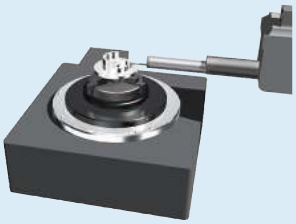

Optional Rotary table θ1 - 12AAD975

Optional Rotary table θ2 - 178-078

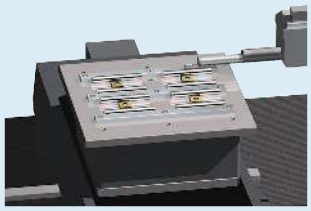

Optional Y-axis - 178-097

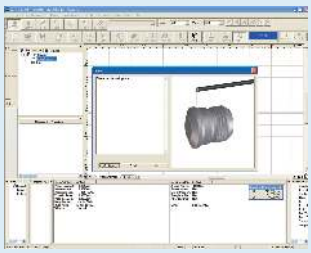

Measurement control screen

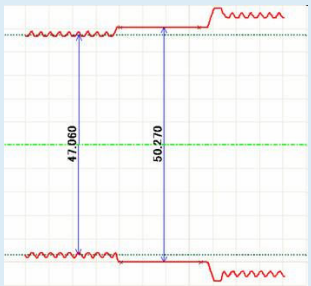

Double sided contour

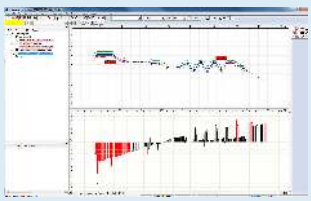

Contour comparison
FORMTRACEPAK

Refer to CONTOUR MEASUREMENT brochure

Formtracer Avant FTA-C4000 series

A high-accuracy 2D contour measuring instrument with dual stylus system; the Avant FTA-C4000 is a benchtop machine and comes with a motorised granite column and stand.

The Formtracer FTA-C4000 offers you the following benefits:

- Easy to operate upward/downward measurements at double sided contours
- Variable measuring force controlled by software FORMTRACEPAK
- Large vertical range and very high resolution
- A large range of optional arms and styli ensures access to restricted features
- Remote control box for quick and accurate machine positioning
- Magnetic joint for a quick change of arms - quick and simple calibration
- Simplified CNC operation
- Optional motorised accessories
- Retrofit options for surface roughness measurement

Metric Traverse: 100 mm

Model	FTA - S4 C4000	FTA - H4 C4000	FTA - W4 C4000	FTA - L4 C4000
No.	**218-371-11**	**218-372-11**	**218-373-11**	**218-374-11**
Z1-axis range [mm]	60	60	60	60
Granite base size (WxD) [mm]	600 x 450	600 x 450	1000 x 450	1000 x 450
Vertical travel [mm]	300	500	500	700

Metric Traverse: 200 mm

Model	FTA - S8 C4000	FTA - H8 C4000	FTA - W8 C4000	FTA - L8 C4000
No.	**218-376-11**	**218-377-11**	**218-378-11**	**218-379-11**
Z1-axis range [mm]	60	60	60	60
Granite base size (WxD) [mm]	600 x 450	600 x 450	1000 x 450	1000 x 450
Vertical travel [mm]	300	500	500	700

FTA-C4000

All products to be sold to commercial customers.
Product illustrations are without obligation. Product descriptions, in particular any and all technical specifications, are only binding when explicitly agreed upon.

Formtracer Avant FTA-D3000 / FTA-D4000 Series

Formtracer Avant FTA-D3000 and FTA-D4000

A high-accuracy 2D surface roughness and contour measuring instrument; the Avant D type is a benchtop machine and comes with a motorised granite column and stand.

The Formtracer Avant FTA-D3000 and FTA-D4000 offer you the following benefits:

- "Hot plug" exchange of drive units
- Easy to operate
- Dual stylus system for upward and downward contour measurements with D4000 type
- Variable contour measuring force set with Formtracepak software with D4000 type
- High accurate surface roughness and contour measurements
- A large range of optional arms and styli ensures access to restricted features
- Remote control box for quick and accurate machine positioning
- Simplified CNC operation
- Optional motorised accessories

Formtracer Avant FTA-D4000
with monitor arm, vibration isolator and side table

Specifications

Vertical travel	300 mm / 500 mm / 700 mm
Traverse	X = 100 mm / 200 mm
Measuring range	Contour Z1 = 60 mm Roughness Z1 = 800 µm / 80 µm / 8 µm
Measuring speed	0,02 - 30 mm/s
Drive speed	X = 0 - 80 mm/s Z2 = 0 - 30 mm/s
Software	**FORMTRACEPAK** • Allows control of all axis, optional motor-driven Y-axis table and rotary table for efficient automated measurement. • Contour evaluation can be performed using analysis of level differences, angle, pitch, area and contour tolerancing as well as surface roughness evaluation as standard. • An inspection certificate can be created by setting the print format as required.

All products to be sold to commercial customers.
Product illustrations are without obligation. Product descriptions, in particular any and all technical specifications, are only binding when explicitly agreed upon.

Formtracer Avant FTA-D3000 / FTA-D4000 Series

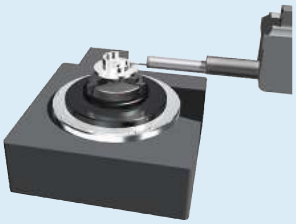

Optional Rotary table θ1 - 12AAD975

Optional Rotary table θ2 - 178-078

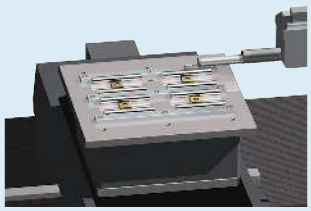

Optional Y-axis - 178-097

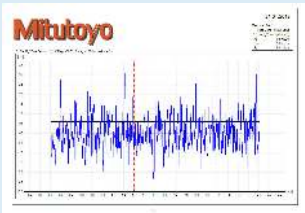

Formtracepak Layout

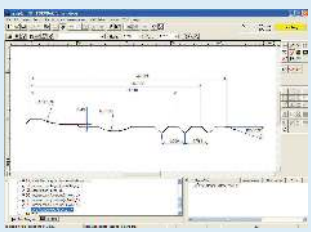

Contour analysis screen

Optional MCubeMap
(in combination with 3D Y-axis 178-096)

Formtracer Avant FTA-D3000 series

A high-accuracy 2D surface roughness and contour measuring instrument; the Avant FTA-D3000 is a benchtop machine and comes with a motorised granite column and stand.

The Formtracer Avant FTA-D3000 offers you the following benefits:

- "Hot plug" exchange of drive units
- Easy to operate
- High accurate surface roughness and contour measurements
- Large vertical range and very high resolution
- A large range of optional arms and styli ensures access to restricted features
- Remote control box for quick and accurate machine positioning
- Simplified CNC operation
- Optional motorised accessories

FTA-D3000

Metric

No.	Model	Detector 0,75 mN	X-axis 100 mm	X-axis 200 mm	Z2-axis 300 mm	Z2-axis 500 mm	Z2-axis 700 mm	Granite size (WxD) [mm]
525-311-11	FTA - S4 D3000	●	●		●			600 x 450
525-312-11	FTA - H4 D3000	●	●			●		600 x 450
525-313-11	FTA - W4 D3000	●	●			●		1000 x 450
525-314-11	FTA - L4 D3000	●	●				●	1000 x 450
525-316-11	FTA - S8 D3000	●		●	●			600 x 450
525-317-11	FTA - H8 D3000	●		●		●		600 x 450
525-318-11	FTA - W8 D3000	●		●		●		1000 x 450
525-319-11	FTA - L8 D3000	●		●			●	1000 x 450

All products to be sold to commercial customers.
Product illustrations are without obligation. Product descriptions, in particular any and all technical specifications, are only binding when explicitly agreed upon.

Formtracer Avant FTA-D3000 / FTA-D4000 Series

Formtracer Avant FTA-D4000 series

A high-accuracy 2D surface roughness and contour measuring instrument; the Avant FTA-D4000 is a benchtop machine and comes with a motorised granite column and stand.

The Formtracer Avant FTA-D4000 offers you the following benefits:

- "Hot plug" exchange of drive units
- Easy to operate
- Dual stylus system for upward and downward contour measurements
- Variable contour measuring force set with Formtracepak software
- High accurate surface roughness and contour measurements
- A large range of optional arms and styli ensures access to restricted features
- Remote control box for quick and accurate machine positioning
- Simplified CNC operation
- Optional motorised accessories

FTA-D4000

Metric

No.	Model	Detector 0,75 mN	X-axis 100 mm	X-axis 200 mm	Z2-axis 300 mm	Z2-axis 500 mm	Z2-axis 700 mm	Granite size (WxD) [mm]
525-321-11	FTA - S4 D4000	●	●		●			600 x 450
525-322-11	FTA - H4 D4000	●	●			●		600 x 450
525-323-11	FTA - W4 D4000	●	●			●		1000 x 450
525-324-11	FTA - L4 D4000	●	●				●	1000 x 450
525-326-11	FTA - S8 D4000	●		●	●			600 x 450
525-327-11	FTA - H8 D4000	●		●		●		600 x 450
525-328-11	FTA - W8 D4000	●		●		●		1000 x 450
525-329-11	FTA - L8 D4000	●		●			●	1000 x 450

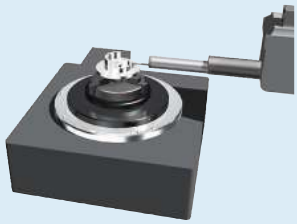

Optional Rotary table θ1 - 12AAD975

Optional Rotary table θ2 - 178-078

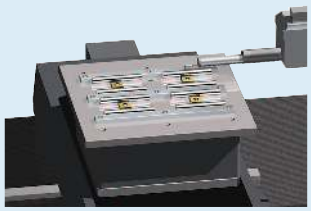

Optional Y-axis - 178-097

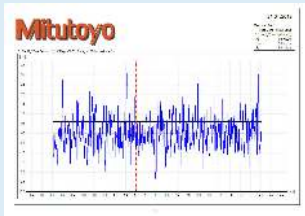

Formtracepak Layout

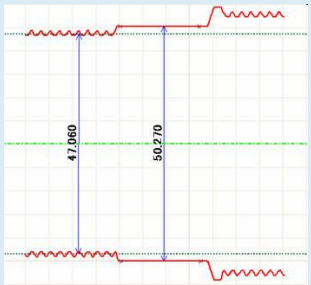

Double sided contour

Optional MCubeMap
(in combination with 3D Y-axis 178-096)

All products to be sold to commercial customers.
Product illustrations are without obligation. Product descriptions, in particular any and all technical specifications, are only binding when explicitly agreed upon.

Formtracer CS-3300

Series 525 - Surface and Contour Measuring System

This provides all-in-one surface roughness and contour measurement within one drive unit.

The Formtracer CS-3300 offers you the following benefits:

- You can carry out simultaneous analysis of roughness and contour with one measurement.
- It performs roughness analyses conform to various international standards (EN ISO, VDA, ANSI, JIS and customized settings).
- It gives you the best measuring condition with a vibration stand as standard.
- The high drive speed reduces the total measurement time.
- The detector unit can be extended to avoid interference between the drive unit and workpiece.

Specifications

Vertical travel [mm]	Z2 = 300 mm / 500 mm / 700 mm
Traverse	X = 100 mm / 200mm
Measuring range	Z1 = 5 mm (Up to 10 mm with an optional stylus)
Measuring speed	Roughness measurement: 0,02 / 0,05 / 0,1 / 0,2 mm/s Contour measurement: 0,02 / 0,05 / 0,1 / 0,2 / 0,5 / 1 / 2 / 5 / 10 / 20 / 30 mm/s
Drive speed	X = 0 - 80 mm/s Z2 = 0 - 30 mm/s
Traverse straightness	X = 0,2 µm / 100 mm X = 0,6 µm / 200 mm
Inclining range	±45°
Accuracy	X = (0,8+0,01L) µm (S4, H4, W4, L4 model) X = (0,8+0,015L) µm (S8, H8, W8, L8 model) [L : Drive length (mm)] Z1 = (1,5+2H/100) µm H : Measurement height from the horizontal position (mm)
Software	**FORMTRACEPAK** • Allows control of all axis, optional motor-driven Y-axis table and rotary table for efficient automated measurement. • Surface roughness analysis and contour evaluation can be performed using analysis of level differences, angle, pitch, area and contour tolerancing as standard. • An inspection certificate can be created by setting the print format as required.

Scan QR Code with your mobile device and watch our product videos on YouTube

CS-3300H4
(with optional Y-axis 178-097, shown grayed)

Metric — Traverse: 100 mm

Model	CS-3300S4	CS-3300H4	CS-3300W4	CS-3300L4
No.	**525-211-11**	**525-212-11**	**525-213-11**	**525-214-11**
Granite base size (WxD) [mm]	600 x 450	600 x 450	1000 x 450	1000 x 450
Vertical travel [mm]	300	500	500	700

Metric — Traverse: 200 mm

Model	CS-3300S8	CS-3300H8	CS-3300W8	CS-3300L8
No.	**525-216-11**	**525-217-11**	**525-218-11**	**525-219-11**
Granite base size (WxD) [mm]	600 x 450	600 x 450	1000 x 450	1000 x 450
Vertical travel [mm]	300	500	500	700

All products to be sold to commercial customers.
Product illustrations are without obligation. Product descriptions, in particular any and all technical specifications, are only binding when explicitly agreed upon.

Formtracer CS-3300

Series 525 - Surface and Contour Measuring System

Specifications and Styli

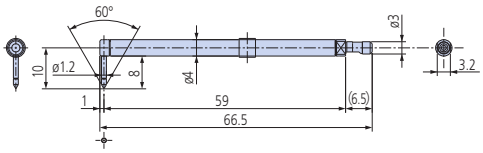

12AAD554
Standard stylus
Radius of tip curvature = 2 µm
Tip material: Diamond

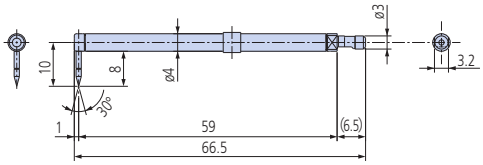

12AAD552
Cone stylus
Radius of tip curvature = 25 µm
Tip material: Sapphire

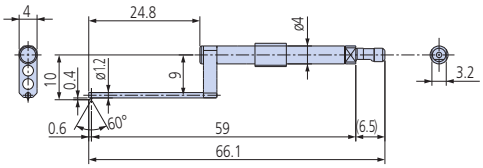

12AAD556
Small hole stylus
Radius of tip curvature = 2 µm
Tip material: Diamond

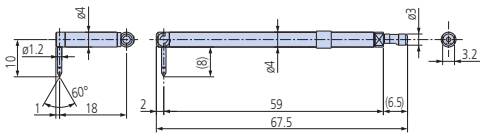

12AAD558
Eccentric type stylus
Radius of tip curvature = 2 µm
Tip material: Diamond

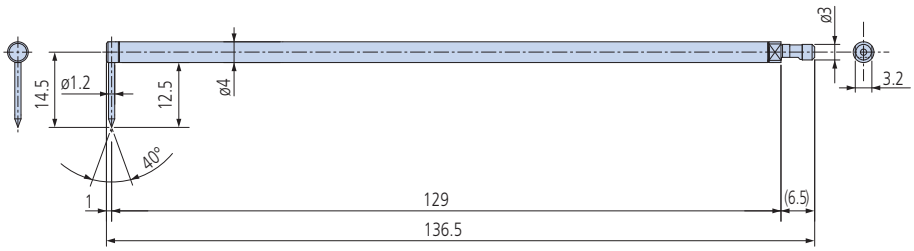

12AAD562
2x-long stylus*[1]
Radius of tip curvature = 5 µm
Tip material: Diamond

*[1]: Measuring force is 4 mN and the Z1 measuring and resolution is double that of the standard stylus.

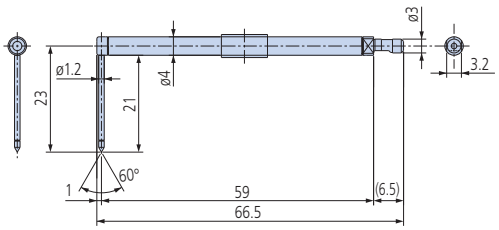

12AAD560
Deep groove stylus
Radius of tip curvature = 2 µm
Tip material: Diamond

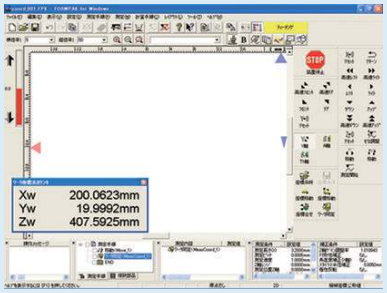

Measuring instrument control

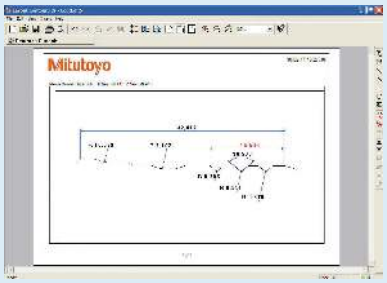

Contour analysis screen

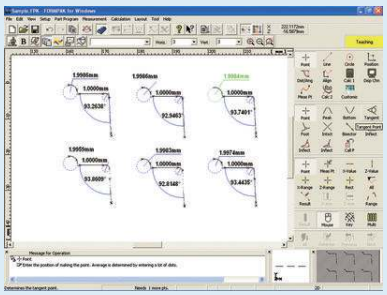

Contour analysis screen

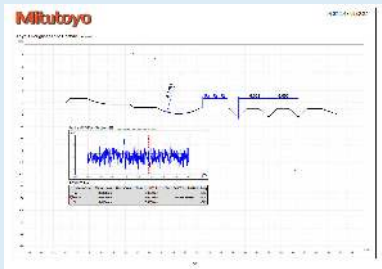

Contour and roughness layout

All products to be sold to commercial customers.
Product illustrations are without obligation. Product descriptions, in particular any and all technical specifications, are only binding when explicitly agreed upon.

Formtracer Extreme SV-C4500CNC

Series 525 - Surface and Contour Measuring Instrument

High accurate fully CNC surface and contour measuring instrument.

The Formtracer Extreme SV-C4500CNC offers you the following benefits:

- Powerful as two separate, fully CNC instruments.
- Measurement of long distances in Z2-axis for models without α- axis.
- Each axis has a drive speed up to 200 mm/s.
- Dual stylus system for upward and downward contour measurement at doubled sided contours.
- It´s variable contour measuring force is controlled by software FORMTRACEPAK.
- The contour drive unit is equipped with an arc encoder detector giving excellent accuracy and resolution in Z1-axis.
- Perfectly made for increased throughput of multiple profile and workpiece measurement tasks.
- The detector unit incorporates an anti-collision safety device, causing it to stop automatically if its main body collides with a workpiece or jig.

Specifications

Measuring range	Z2= [S] 300 mm / [H] 500 mm
Measuring speed	0,02 - 2 mm/s
Drive speed	CNC mode: max. 200 mm/s Joystick mode: 0-50 mm/s
Accuracy	Contour detector: X= (0,8 +4L/200) µm [L: Drive length (mm)] Contour Z1= (0,8 + I2HI/100) µm [H: Measurement height from the horizontal position (mm)] Z2=(3,5 + 15H/1000) µm
Inclining range	-45° (CCW) to +10° (CW) (for models equipped with with α - axis)
Measuring force	0,75 mN
Software	**FORMTRACEPAK** • Allows control of all axis, motor-driven Y-axis table and rotary table for efficient automated measurement. • Contour evaluation can be performed using analysis of level differences, angle, pitch, area and contour tolerancing as standard. • An inspection certificate can be created by setting the print format as required.
Optional accessories	Other optional and standard accessories are listed later in different sections for accessories and styli.

Optional accessories

No.	Description
12AAD975	Theta-1 axis, Rotary Axis
178-037	2D auto-leveling table, for CNC Surftest and Formtracer
178-077	3D leveling table
178-078	Theta-2 axis, Rotary Axis
178-397-2	Detector, 4mN

Refer to CONTOUR AND SURFACE MEASUREMENT brochure

SV-C4500CNC equipped with two powerful exchangeable drive units

Surface Roughness drive unit

Contour drive unit

All products to be sold to commercial customers.
Product illustrations are without obligation. Product descriptions, in particular any and all technical specifications, are only binding when explicitly agreed upon.

Mitutoyo

Formtracer Extreme SV-C4500CNC

No.	Z2-axis range [mm]	Y-axis table unit	α-axis unit
525-701-12	300	Installed	-
525-702-12	300	Installed	Installed
525-703-12	500	Installed	-
525-704-12	500	Installed	Installed

Multiple measurements

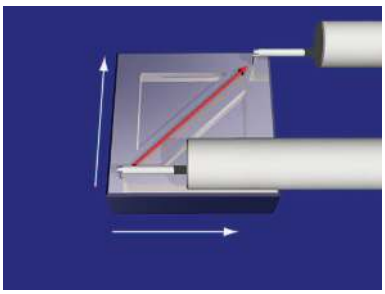

Through 2-axis simultaneous control in the X and Y directions

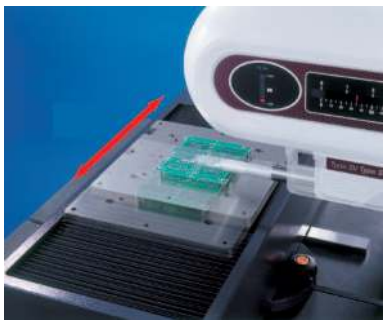

Y-axis

α-axis

All products to be sold to commercial customers.
Product illustrations are without obligation. Product descriptions, in particular any and all technical specifications, are only binding when explicitly agreed upon.

Formtracer Extreme SV-C4500CNC HYBRID Type 1

Series 525 - Surface and Contour Measuring Instrument

This measuring system is equipped with a surface roughness detector, a contour detector and a confocal chromatic point sensor (CPS) employing axial chromatic aberration.

The Formtracer Extreme SV-C4500CNC Hybrid Type 1 offers you the following benefits:

- Powerful as three separate fully CNC instruments.
- High accurate fully CNC surface and contour measuring instrument.
- Non-contact and contact measurement combined in one instrument.
- Two machine types with different CPS sensors available, depending on measuring range and resolution.
- Drive speed of up to 200 mm/s in all axes.
- Vibration isolator as standard.

Specifications

Vertical travel	Z2 = 500 mm
Measuring range	X= 200 mm Y= 200 mm **Contour:** Z1= 60 mm **Roughness:** Z1= 800 µm; 80 µm; 8 µm (up to 2,4 mm with an optional stylus)
Measuring speed	0,02 - 2 mm/s
Accuracy	Contour detector: X= (0,8 +4L/200) µm [L: Drive length (mm)] Contour Z1= (0,8 + I2HI/100) µm [H: Measurement height from the horizontal position (mm)] Z2=(3,5 + 15H/1000) µm
Software	**FORMTRACEPAK** • Allows control of all axis, motor-driven Y-axis table and rotary table for efficient automated measurement. • Contour evaluation can be performed using analysis of level differences, angle, pitch, area and contour tolerancing as standard. • An inspection certificate can be created by setting the print format as required.
Non-contact detector	
Measuring range	CPS0517 = 100 µm CPS2525 = 1200 µm
Working distance	CPS0517 = 12 mm CPS2525 = 21 mm
Resolution	CPS0517 = 5 nm CPS2525 = 25 nm

Surface roughness drive unit

Contour drive unit

CPS sensor drive unit

No.	Model	Roughness	Contour	Non-contact
525-676-12	Type 1A	0,75 mN	Dual contour stylus	CPS2525
525-677-12	Type 1B	0,75 mN	Dual contour stylus	CPS0517

All products to be sold to commercial customers.
Product illustrations are without obligation. Product descriptions, in particular any and all technical specifications, are only binding when explicitly agreed upon.

Mitutoyo

Formtracer Extreme CS-5000CNC and CS-H5000CNC

Series 525 - CNC Surface and Contour Measuring Instruments

This is the highest-accuracy stylus type CNC surface roughness and contour measuring instrument.

The Formtracer Extreme CS-5000CNC / CS-H5000CNC offers you the following benefits:

- It meets the highest demands of accuracy and repeatability.
- You can carry out simultaneous analysis of roughness and contour within one measurement.
- It includes a cabin and a vibration stand as standard to avoid external influences.
- High resolution in X1-axis: 5 nm and Z1-axis: 0,8 nm/1,6 nm.

CS-H5000CNC

Specifications

Vertical travel	Z2 = 300 mm / 500 mm
Traverse	200mm
Measuring range	Z1= 12mm
Measuring speed	Roughness measurement: 0,02 - 0,2 mm/s Contour measurement: 0,02 - 2 mm/s
Drive speed	CNC mode: max. 40 mm/s Joystick mode 0 - 40 mm/s
Accuracy	**CS-5000CNC:** X = (0,3+0.002L) µm Z1 = (0,3+I0,02HI) µm **CS-H5000CNC:** X = (0,16+0,001L) µm Z1 = (0,07+I0,02HI) µm [L : Drive length (mm)] [H : Measurement height from the horizontal position (mm)]
Traverse straightness	**CS-5000CNC:** X = (0,1+0,0015L) µm [standard stylus] X = (0,2+0,0015L) µm [double length stylus] **CS-H5000CNC:** X = (0,05+0,0003L) µm [standard stylus] X = (0,1+0,0015L) µm [double length stylus]
Resolution	X = 0,005 µm Z1 = 0,0008 µm [standard stylus] Z1 = 0,0016 µm [double length stylus]
Software	**FORMTRACEPAK** • Allows control of all axis, optional motor-driven Y-axis table and rotary table for efficient automated measurement. • Contour evaluation can be performed using analysis of level differences, angle, pitch, area and contour tolerancing as well as surface roughness evaluation as standard. • An inspection certificate can be created by setting the print format as required.

All products to be sold to commercial customers.
Product illustrations are without obligation. Product descriptions, in particular any and all technical specifications, are only binding when explicitly agreed upon.

Formtracer Extreme CS-5000CNC and CS-H5000CNC

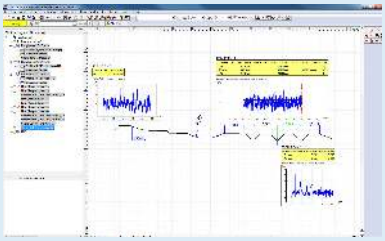

Contour and roughness analysis

Optional:
Aspherical lens analysis program
ASLPAK

Refer to CONTOUR AND SURFACE MEASUREMENT brochure

CS-5000CNC

Model	CS-5000CNC S	CS-5000CNC S + Y-axis	CS-5000CNC H	CS-5000CNC H + Y-axis
No.	**525-727-12**	**525-729-12**	**525-747-12**	**525-749-12**
Z2-axis range [mm]	300	300	500	500
Y-axis table unit	-	Installed	-	Installed
α-axis unit	Installed	Installed	Installed	Installed

CS-H5000CNC

Model	CS-H5000CNC S	CS-H5000CNC S + Y-axis	CS-H5000CNC H	CS-H5000CNC H + Y-axis
No.	**525-776-12**	**525-777-12**	**525-706-12**	**525-707-12**
Z2-axis range [mm]	300	300	500	500
Y-axis table unit	-	Installed	-	Installed
α-axis unit	-	-	-	-

Standard

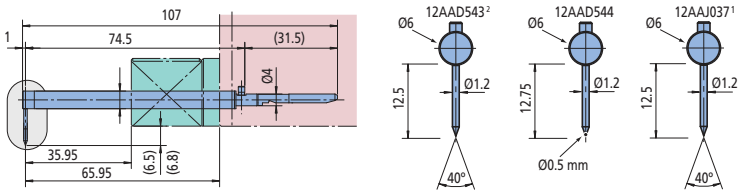

Double length

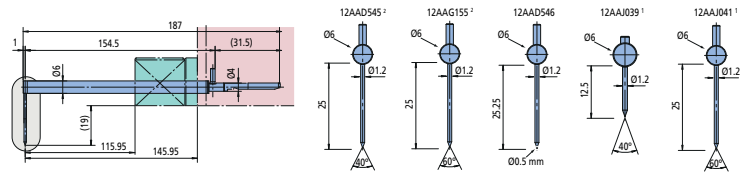

For small holes

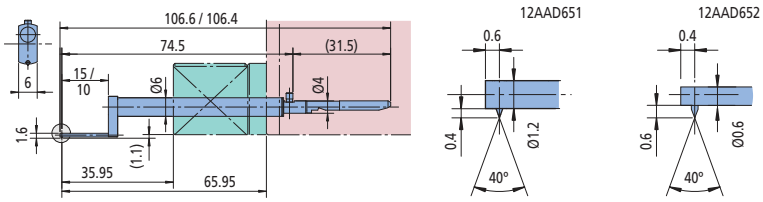

Eccentric

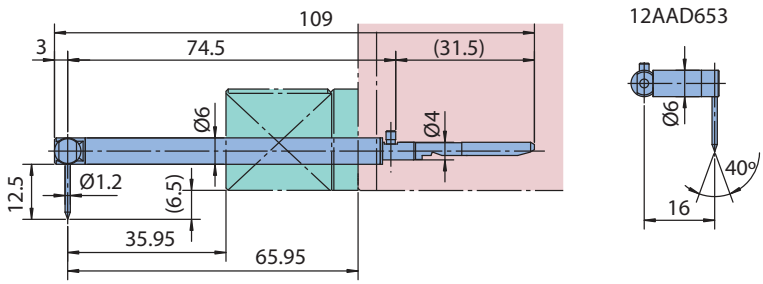

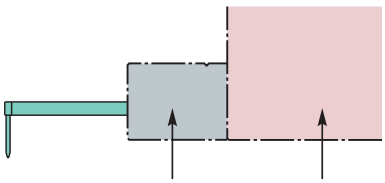

Nosepiece Detector

1 = only for CS-H5000CNC
2 = only for CS-5000CNC

All products to be sold to commercial customers.
Product illustrations are without obligation. Product descriptions, in particular any and all technical specifications, are only binding when explicitly agreed upon.

Mitutoyo

Roundtest RA-10

Series 211 - Form Measuring Instrument

This is a compact and affordable form measuring instrument.

The Roundtest RA-10 offers you the following benefits:

- It combines outstanding cost and performance with full measurement capabilities.
- The machine has a compact body with integrated electronics and printer, making it ideal for installation in space-restricted locations.
- You can easily view measurement results and recorded profiles on the large coloured LCD panel display.
- Despite being a low-priced model, the turntable with air bearings gives you rotational accuracy as high as (0,04+0,0006H) µm, assuring a precision that compares well with that of higher priced models.
- The control panel has large keys and an intuitive layout for easy operation.
- One-key calling function.
- One-key zero-set function.
- Support of 16 languages.
- It complies with EN ISO standard like 12181-1, 12181-2, 12781-1 and 12781-2.
- USB Communication Program – Microsoft® Excel ® based – to import results and create, save and print out inspection certificates on PC.

RA-10 with optional collet

Z-axis scale unit

X-axis stop

Specifications

Range	±1000 µm
Turntable	
Rotational accuracy	**Radial:** (0,04+0,0006H) µm H: Measuring height from turntable surface (mm) **Axial:** (0,04+0,0006X) µm X: Radial distance from center (mm)
Max. probing Ø	100 mm
Max. workpiece ø	320 mm
Max. turntable loading	10 kg
Vertical column	
Vertical travel [mm]	117 mm
Max. probing height	152 mm
Display unit	
Data analysis items	Roundness, Coaxiality, Concentricity, Flatness, Runout radial
Printer	Built-in thermal line printer

Optional accessories

No.	Description
12AAH318	Z-axis scale unit
12AAH320	X-axis stopper
12AAH402	Collet (Ø 0,5-1,0mm)*
12AAH403	Collet (Ø 1,0-1,5mm)*
12AAH404	Collet (Ø1,5-2,0mm)*
12AAH405	Collet (Ø 2,0-2,5mm)*
12AAH406	Collet (Ø2,5-3,0mm)*
12AAH407	Collet (Ø3,0-3,5mm)*
12AAH408	Collet (Ø3,5-4,0mm)*
12AAH409	Collet (Ø4,5-5,0mm)*
12AAH410	Collet (Ø5,0-6,0mm)*
12AAH411	Collet (Ø6,0-7,0mm)*
12AAH412	Collet (Ø 7,0-8,0mm)*
12AAH413	Collet (Ø8,0-9,0mm)*
12AAH414	Collet (Ø 9,0-10,0mm)*
12AAH420	Spacer for reference hemisphere
12AAH425	Alignment table with D.A.T (mm)
211-013	Micro vibration isolator
211-016	Reference hemisphere
211-031	Micro chuck, OD: 0,1-1,5mm
211-032	Quick chuck, OD: 1-79mm, ID: 16-69 mm
211-045	Magnification calibration gauge, for Roundtest
211-051	Collet chuck holder (OD: 0,5-10mm)*
211-052	Quick chuck
211-053	V-block A (Screw clamp)
211-054	V-block B (spring clamp)
211-055	Spigot / Socket fixture
356038	Auxiliary stage for low height workpiece, for Roundtest
997090	Gauge block set for calibration, for Roundtest
K551133	eco-fix Kit Form S, CMM fixtures, eco-fix series

Consumable spares

No.	Description
12AAH181	Printer paper (10 rolls)

All products to be sold to commercial customers.
Product illustrations are without obligation. Product descriptions, in particular any and all technical specifications, are only binding when explicitly agreed upon.

Roundtest RA-10

No.	Model	Max. probing Ø [mm]	Max. workpiece ø [mm]	Max. turntable loading [kg]
211-541D	RA-10	100	320	10

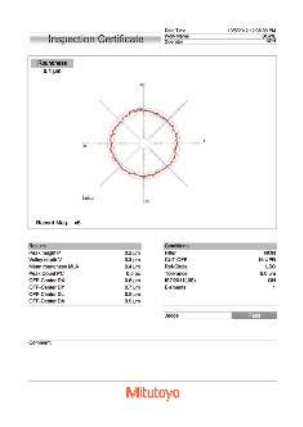

Software USB Communication Program as a free download on www.mitutoyo.eu (registration required)

Refer to FORM MEASUREMENT brochure

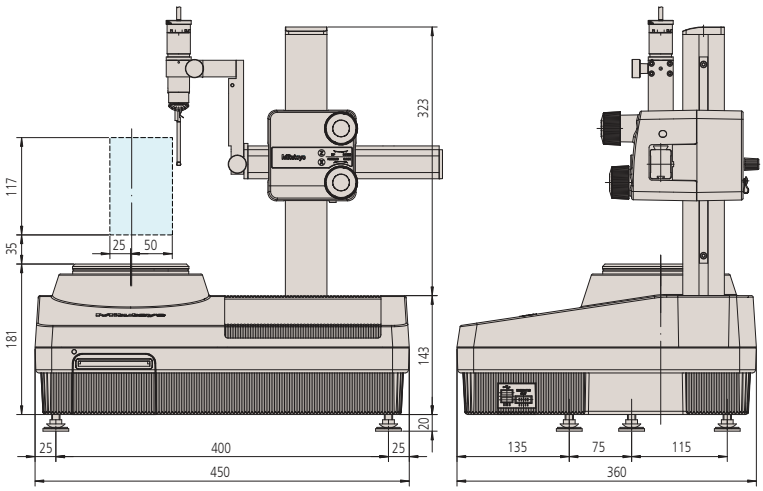

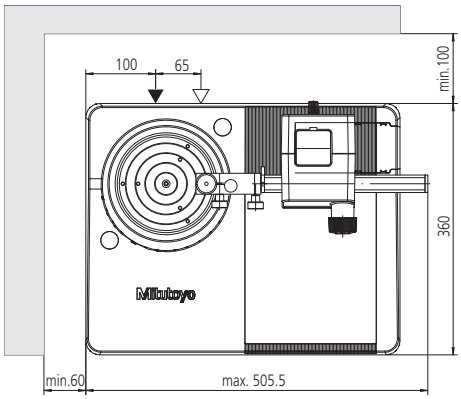

211-031

211-032

211-051

211-052

211-053

211-054

211-055

12AAH425

211-013

All products to be sold to commercial customers.
Product illustrations are without obligation. Product descriptions, in particular any and all technical specifications, are only binding when explicitly agreed upon.

Roundtest RA-120 and RA-120P

Series 211 - Form Measuring Instrument

These are compact, affordable and simple-to-use instruments for measuring roundform geometry.

The Roundtest RA-120 and RA-120P offer you the following benefits:
- The turntable accuracy of (0,04+0,0006H) µm provides high level form analysis.

RA-120
- The RA-120 has a compact body with integrated electronics and printer, making it ideal for installation in space-restricted locations.
- You can easily view measurement results and recorded profiles on the large coloured LCD panel display.
- One-key operations.
- Support of 16 languages.
- It complies with EN ISO standard like 12181-1, 12181-2, 12781-1 and 12781-2
- USB Communication Program – Microsoft® Excel ® based – to import results and create, save and print out inspection certificates on PC.

RA-120P
- The RA-120P is a PC based model with all operations controlled via powerful ROUNDPAK software.
- Software ROUNDPAK gives you excellent possibilities for single measurement and part programming.

RA-120

RA-120P

Specifications

Turntable	
Rotational accuracy	**Radial:** 7>(0,04+0,0006H) µm 7>H: Measuring height from turntable surface (mm) **Axial:** 7>(0,04+0,0006X) µm 7>X: Radial distance from center (mm)
Max. probing Ø	280 mm 380 mm in reverse position mm
Max. workpiece ø	440 mm
Max. turntable loading	25 kg
Centering range	±3 mm
Leveling range	±1°
Vertical column	
Vertical travel	280 mm
Max. probing height	280 mm above turntable surface 480 mm in reverse position
Max. probing depth	100 mm (minimum ID: 30 mm)
Display unit	
Data analysis items	Roundness, Coaxiality, Flatness, Runout (radial), Runout (axial), Thickness deviation, Parallelism, Perpendicularity
Printer	Built-in thermal line printer (RA-120)
Software	**ROUNDPAK** (only RA-120P)

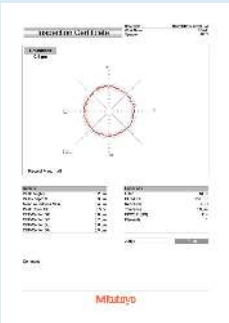

Software
USB Communication Program
as a free download on www.mitutoyo.eu
(registration required)
(only RA-120)

Refer to ROUNDTEST RA-120 brochure

Scan QR Code with your mobile device and watch our product videos on YouTube

All products to be sold to commercial customers.
Product illustrations are without obligation. Product descriptions, in particular any and all technical specifications, are only binding when explicitly agreed upon.

Roundtest RA-120 and RA-120P

Optional accessories	Other optional and standard accessories are listed later in this section for accessories and styli.

Optional accessories

No.	Description
12AAH320	X-axis stopper
211-013	Micro vibration isolator
211-014	Three-jaw chuck, OD: 2-78mm, ID: 25-68mm
211-016	Reference hemisphere
211-031	Micro chuck, OD: 0,1-1,5mm
211-032	Quick chuck, OD: 1-79mm, ID: 16-69 mm
211-045	Magnification calibration gauge, for Roundtest
211-061	Collect chuck holder
356038	Auxiliary stage for low height workpiece, for Roundtest
997090	Gauge block set for calibration, for Roundtest
K551133	eco-fix Kit Form S, CMM fixtures, eco-fix series

Consumable spares

No.	Description
12AAH181	Printer paper (10 rolls)

211-016

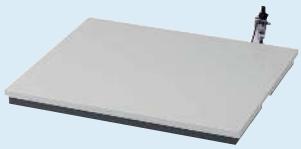

211-013

Z-axis scale unit (optional)

X-axis stop

Scan QR Code with your mobile device and watch our product videos on YouTube

Series 211 - Form Measuring Instrument

This is a compact roundness tester with D.A.T. (Digital Adjustment Table) function.

The D.A.T. gives you the following benefits:

- The turntable displays centering and leveling adjustments digitally, making this challenging task easy enough for even an untrained operator to perform, through these four simple steps:

1. Preliminary measurement of two cross sections on the workpiece.
2. The centering and leveling adjustment values are displayed.
3. The digital micrometer heads on the rotary table are adjusted to match the values displayed.
4. Centering and leveling is complete. [Centering range : ±3 mm - Leveling range : ±1°]

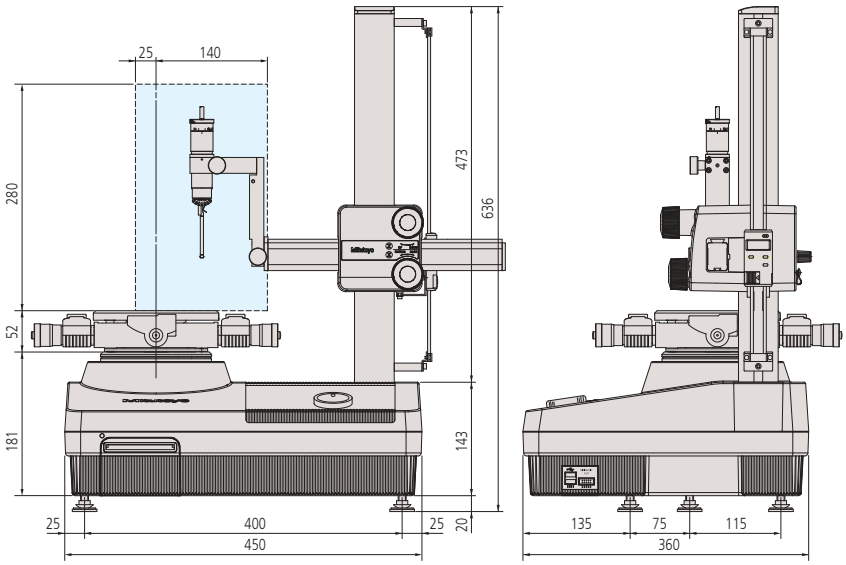

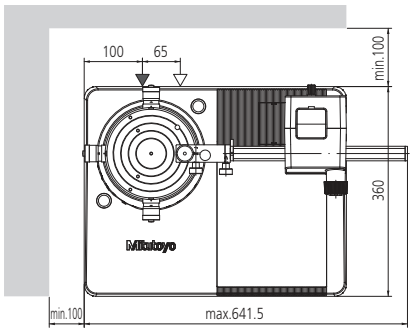

No.	Model	Max. probing diameter [mm]	Max. workpiece ø [mm]	Max. turntable loading [kg]
211-542D	RA-120 with D.A.T. function	280	440	25
211-544D	RA-120 with mechanical turntable	280	440	25
211-545D	RA-120P with D.A.T. function	280	440	25
211-547D	RA-120P with mechanical turntable	280	440	25

All products to be sold to commercial customers.
Product illustrations are without obligation. Product descriptions, in particular any and all technical specifications, are only binding when explicitly agreed upon.

Roundtest RA-1600

Series 211 - Form Measuring System

This is a PC-compliant form measuring system which allows you to measure roundform geometry like cylindricity.

The Roundtest RA-1600 offers the following benefits:

- It is equipped with a high accurate turntable accuracy of (0,02+0,0006H) µm.
- You can carry out simple & accurate centering and leveling of the workpiece with D.A.T. (Digital Adjustment Table).
- The user friendly software, ROUNDPAK, gives you easy drag and drop usage.
- ROUNDPAK also has easy-to-use part programming and single measurement functions.
- A remote control box is including allowing you easy operation.
- There is also an auto follow function for easy and quick pre-centering of the workpiece.

RA-1600 (+desktop vibration isolator)

Spiral measurement
Provided with a spiral measurement function that combines turntable rotation and rectilinear motion allowing cylindricity, coaxiality and other form characteristics to be measured in continuous data stream mode.

No.	Model	Max. probing Ø [mm]	Max. workpiece Ø [mm]	Max. turntable loading [kg]
211-723D	RA-1600	280	560	25

Specifications

Turntable	
Rotational accuracy	**Radial:**<br/7>(0,02+0,0006H) µm<br/7>H: Measuring height from turntable surface (mm) **Axial:**<br/7>(0,02+0,0006X) µm<br/7>X: Radial distance from center (mm)
Rotational speed	4, 6, 10 rpm
Max. probing Ø	280 mm
Max. workpiece ø	560 mm
Max. turntable loading	25 kg
Centering range	±3 mm
Leveling range	±1°
Vertical column	
Max. probing height	300 mm above turntable surface
Max. probing depth	91 mm (minimum ID : ø32 mm)<br/7>50 mm (minimum ID : ø7 mm)
Straightness	0,2 µm / 100 mm<br/7>0,3 µm / 300 mm
Parallelism with turntable axis	1,5 µm / 300 mm
Software	**ROUNDPAK**
Optional accessories	Other optional and standard accessories are listed later in this section for accessories and styli.

Optional accessories

No.	Description
12AAF203	Double length detector holder
12AAF204	Large diameter detector holder
12AAK110	Vibration isolator
12AAK120	Monitor arm, for vibration isolator 12AAK120
12AAL019	Side table
12AAL090	Sliding detector holder
211-014	Three-jaw chuck, OD: 2-78mm, ID: 25-68mm
211-031	Micro chuck, OD: 0,1-1,5mm
211-032	Quick chuck, OD: 1-79mm, ID: 16-69 mm
211-045	Magnification calibration gauge, for Roundtest
211-061	Collect chuck holder
356038	Auxiliary stage for low height workpiece, for Roundtest
997090	Gauge block set for calibration, for Roundtest
K551133	eco-fix Kit Form S, CMM fixtures, eco-fix series

All products to be sold to commercial customers.
Product illustrations are without obligation. Product descriptions, in particular any and all technical specifications, are only binding when explicitly agreed upon.

Roundtest RA-1600

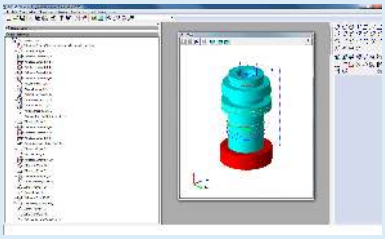

Measuring screen

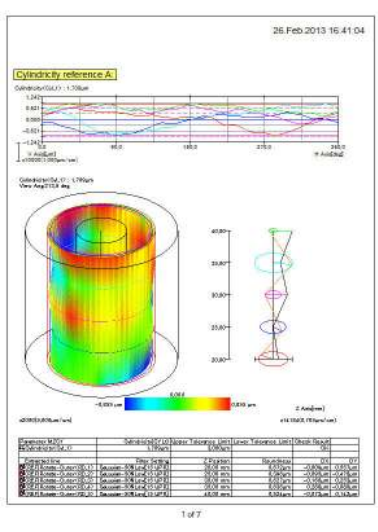

Result screen

Refer to ROUNDTEST RA-1600 brochure

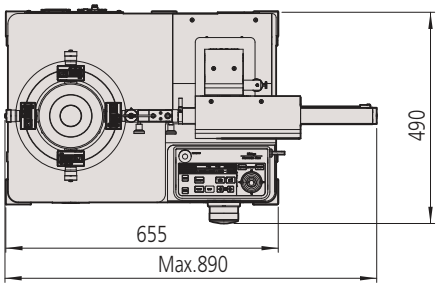

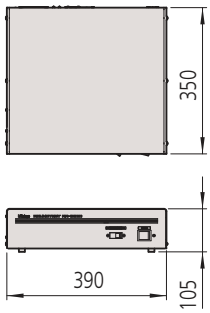

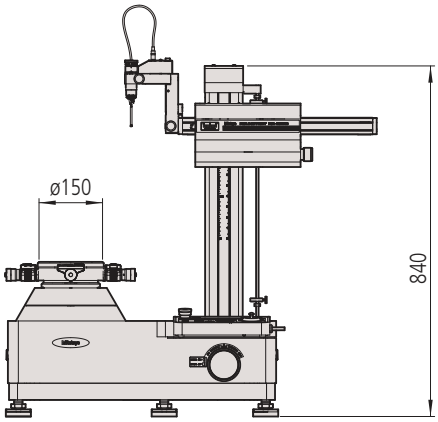

12AAF204

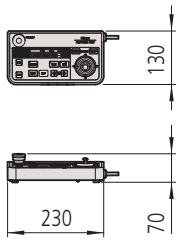

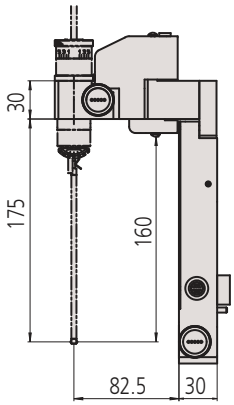

12AAF203

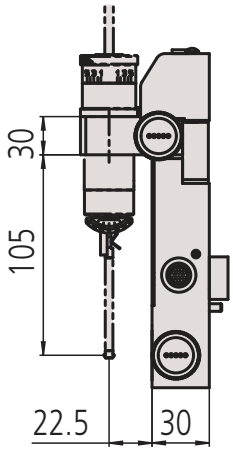

12AAF204

All products to be sold to commercial customers.
Product illustrations are without obligation. Product descriptions, in particular any and all technical specifications, are only binding when explicitly agreed upon.

Mitutoyo

Roundtest RA-2200

Series 211 - Form Measuring Instrument

This is a highly accurate form measuring system which allows you to measure roundform geometry like cylindricity.

The Roundtest RA-2200 offers the following benefits:

- It has fully motorised axes movement.
- Its extremely high turntable accuracy of (0,02+0,00035H) µm gives you excellent form analysis.
- The user friendly software, ROUNDPAK, gives you easy drag and drop usage and a wide range of parameters.
- ROUNDPAK also has easy-to-use part programming and single measurement functions.
- A huge number of styli provides you with maximum flexibility.
- There is an auto follow function for easy and quick pre-centering of the workpiece.

There is a wide variety of models available to suit any application.
RA-2200DS/DH: These models have a navigation function supplied as standard, to quickly and simply guides you through the centering and leveling task. The models are equipped with the D.A.T. (Digital Adjustment Table).

RA-2200AS/AH: The models have an automatic centering and leveling turntable supplied as standard , freeing you from the centering and leveling task. The models are equipped with the A.A.T. (Automatic Adjustment Table).

RA-2200AS

Automatic measurement

Specifications

Turntable	
Rotational accuracy	**Radial:**<br/7>(0,02+0,00035H) µm<br/7>H: Measuring height from turntable surface (mm) **Axial:**<br/7>(0,02+0,00035X) µm<br/7>X: Radial distance from center (mm)
Rotational speed	2, 4, 6, 10 rpm
Max. probing Ø	300 mm
Max. workpiece Ø	580 mm
Max. turntable loading	30 kg
Centering range	**DS / DH:** ±5 mm **AS / AH:** ±3 mm
Leveling range	±1°
Vertical column	
Max. probing height	**AS / DS :** 300 mm<br/7>**AH / DH:** 500 mm<br/7>above turntable surface
Max. probing depth	85 mm (minimum ID : ø32 mm)<br/7>50 mm (minimum ID : ø7 mm)
Straightness	0,1 µm / 100 mm<br/7>**AS / DS :** 0,15 µm / 300 mm<br/7>**AH / DH:** 0,25 µm / 500 mm
Parallelism with rotation center	**AS / DS :** 0,7 µm / 300 mm<br/7>**AH / DH:** 1,2 µm / 500 mm
Horizontal axis	
Straightness	0,7 µm / 150 mm
Perpendicularity to rotation center	1 µm / 150 mm
Software	**ROUNDPAK** FORMTRACEPAK-AP (optional for roughness detection unit)
Optional accessories	Other optional and standard accessories are listed later in this section for accessories and styli.

Optional accessories

No.	Description
12AAF203	Double length detector holder
12AAF204	Large diameter detector holder
12AAF353	Roughness detection unit
12AAK110	Vibration isolator
12AAK120	Monitor arm, for vibration isolator 12AAK120
12AAL019	Side table
211-014	Three-jaw chuck, OD: 2-78mm, ID: 25-68mm
211-031	Micro chuck, OD: 0,1-1,5mm
211-032	Quick chuck, OD: 1-79mm, ID: 16-69 mm
211-045	Magnification calibration gauge, for Roundtest
356038	Auxiliary stage for low height workpiece, for Roundtest
K551134	eco-fix Kit Form L, CMM fixtures, eco-fix series

All products to be sold to commercial customers.
Product illustrations are without obligation. Product descriptions, in particular any and all technical specifications, are only binding when explicitly agreed upon.

Roundtest RA-2200

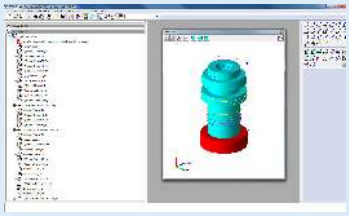

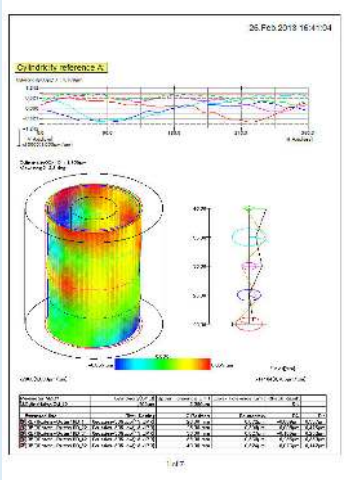

ROUNDPAK
Simple to operate even with a full set of parameters and analysis functions.

Refer to ROUNDTEST RA-2200 brochure

No.	Model	Centering/leveling adjustment 1*	Vertical travel	Max. probing Ø [mm]	Max. workpiece Ø [mm]	Max. turntable loading [kg]
211-511D	RA-2200AS	AAT	300 mm	300	580	30
211-512D	RA-2200AH	AAT	500 mm	300	580	30
211-513D	RA-2200DS	DAT	300 mm	300	580	30
211-515D	RA-2200DH	DAT	500 mm	300	580	30

1*AAT: Automatic adjustment table
DAT: Digital adjustment table

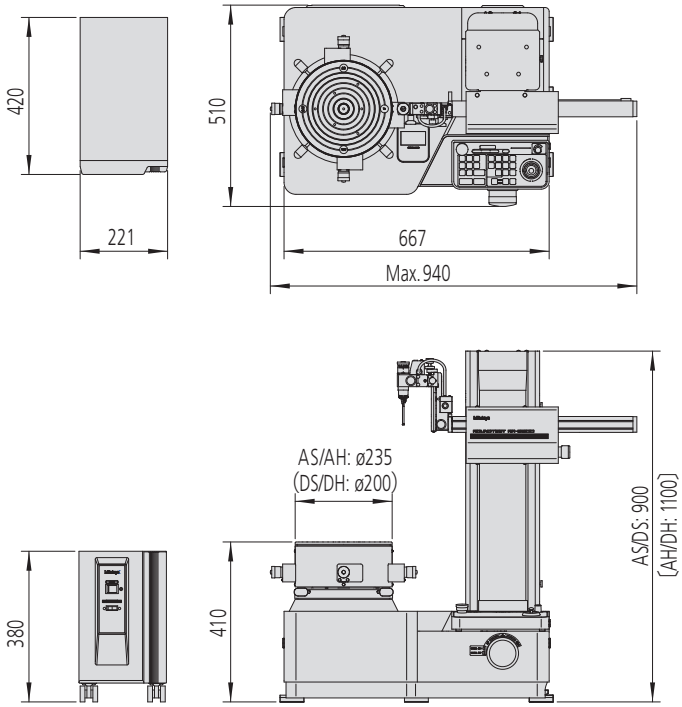

All products to be sold to commercial customers.
Product illustrations are without obligation. Product descriptions, in particular any and all technical specifications, are only binding when explicitly agreed upon.

Roundtest RA-H5200

Series 211 - High-precision Form Measuring Instrument

This is a highly accurate, precision form measuring system developed to give you the highest accuracy as well as high flexibility and analytical capability.

The Roundtest RA-H5200 offers the following benefits:

- Its integrated vibration isolator helps you to measure within the best conditions.
- It has a high measuring range and loading mass.
- The user friendly software, ROUNDPAK, gives you easy drag and drop usage and a wide range of parameters.
- ROUNDPAK also has easy-to-use part programming and single measurement functions.
- A.A.T. (Automatic Adjustment Table) gives you fully automatic centering and leveling.
- There is an auto follow function for easy and quick pre-centering of the workpiece.

RA-H5200AH

Highly accurate, automatic centering/leveling turntable

The performance of this turntable has been achieved through exceptional manufacturing accuracy of the critical components, in addition to a high-accuracy air-bearing that provides superior rigidity. The resulting rotational accuracy, the heart of a Roundtest measuring system, is at 0,02+0,00035H µm.

No.	Model	Centering/leveling adjustment 1*	Vertical travel	Max. probing Ø [mm]	Max. workpiece Ø [mm]	Max. turntable loading [kg]
211-531D	RA-H5200AS	AAT	350 mm	400	680	65
211-532D	RA-H5200AH	AAT	550 mm	400	680	65

1*AAT: Automatic adjustment table

Specifications

Turntable	
Rotational accuracy	**Radial:** (0,02+0,00035H) µm H: Measuring height from turntable surface (mm) **Axial:** (0,02+0,00035X) µm X: Radial distance from center (mm)
Rotational speed	2, 4, 6, 10 rpm Auto centering: 20 rpm
Max. probing Ø	400 mm
Max. workpiece Ø	680 mm
Max. turntable loading	80 kg without auto centering 65 kg
Centering range	±5 mm
Leveling range	±1°
Vertical column	
Max. probing height	**AS :** 350 mm **AH:** 550 mm above turntable surface
Max. probing depth	85 mm (minimum ID : ø32 mm) 50 mm (minimum ID : ø7 mm)
Straightness	**AS / AH :** 0,05 µm / 100 mm **AS :** 0,14 µm / 350 mm **AH :** 0,2 µm / 550 mm
Parallelism with rotation center	**AS :** 0,2 µm / 350 mm **AH :** 0,32 µm / 550 mm
Horizontal axis	
Straightness	0,4 µm / 200 mm
Perpendicularity to rotation center	0,5 µm / 200 mm
Software	**ROUNDPAK** FORMTRACEPAK-AP (optional for roughness detection unit)
Optional accessories	Other optional and standard accessories are listed later in this section for accessories and styli.

Optional accessories

No.	Description
12AAF203	Double length detector holder
12AAF204	Large diameter detector holder
12AAF205	Triple length holder for exta-deep holes
12AAF353	Roughness detection unit
12AAL019	Side table
211-014	Three-jaw chuck, OD: 2-78mm, ID: 25-68mm
211-031	Micro chuck, OD: 0,1-1,5mm
211-032	Quick chuck, OD: 1-79mm, ID: 16-69 mm
211-045	Magnification calibration gauge, for Roundtest
K551134	eco-fix Kit Form L, CMM fixtures, eco-fix series

All products to be sold to commercial customers.
Product illustrations are without obligation. Product descriptions, in particular any and all technical specifications, are only binding when explicitly agreed upon.

Roundtest RA-H5200

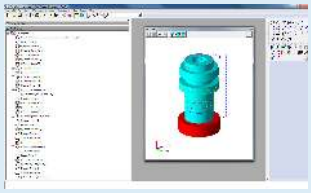

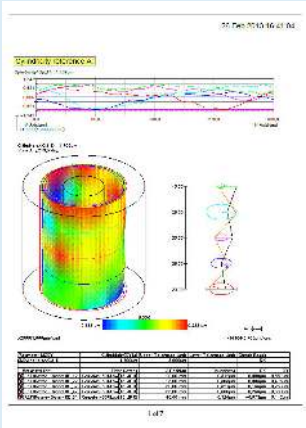

ROUNDPAK
Simple to operate even with a full set of parameters and analysis functions.

211-014

211-032

211-031

211-045

Sliding detector-unit holder provided as a standard feature
The detector-unit holder is equipped with a sliding mechanism, enabling one-touch measurement of a workpiece with a deep hole having a thick wall, which has been difficult with the conventional standard arm. Sliding distance : 112 mm.

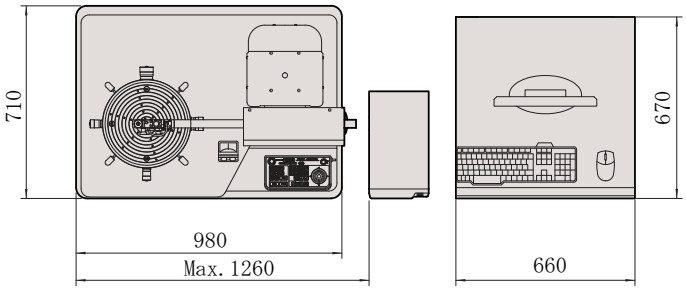

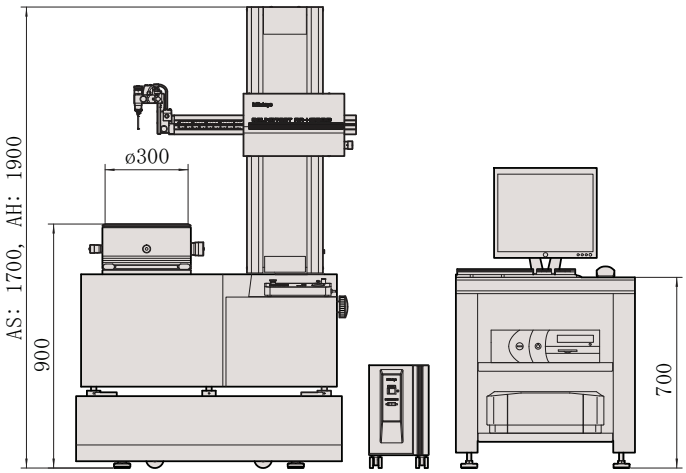

Dimensions

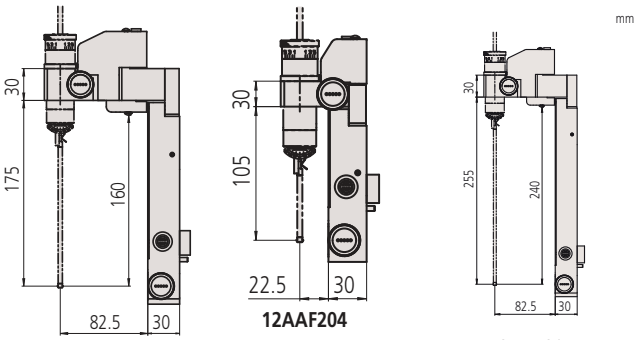

12AAF203 **12AAF204** **12AAF205**

Refer to ROUNDTEST RA-H5200 brochure

All products to be sold to commercial customers.
Product illustrations are without obligation. Product descriptions, in particular any and all technical specifications, are only binding when explicitly agreed upon.

Mitutoyo

Roundtest Extreme RA-2200CNC

Series 211 - High-precision Form Measuring Instrument

This is a fully automatic CNC form measuring instrument that gives highly accurate results.

The Roundtest Extreme RA-2200CNC offers you the following benefits:

- It has a CNC controlled measuring system with orientation steps of 1°.
- The extremely high turntable accuracy of (0,02+0,00035H) µm gives you highly accurate form analysis.
- The user friendly software, ROUNDPAK, gives you easy drag and drop usage and a wide range of parameters.
- ROUNDPAK also has easy-to-use part programming and single measurement functions.
- An automatic centering and leveling turntable A.A.T. (Automatic Adjustment Table) is supplied as standard, freeing you from the centering and leveling task.

RA-2200 CNC
+ optional vibration isolator [12AAK110]
and side table [12AAL019]

No.	Model	Centering/leveling adjustment 1*	Vertical travel	Max. probing Ø [mm]	Max. work-piece ø [mm]	Max. turntable loading [kg]
211-517D	RA-2200CNC AS	AAT	300 mm	256	580	30
211-518D	RA-2200CNC AH	AAT	500 mm	256	580	30

1* AAT : Automatic Adjustment Table

Specifications

Turntable	
Rotational accuracy	**Radial:**<br/7>(0,02+0,00035H) µm<br/7>H: Measuring height from turntable surface (mm) **Axial:**<br/7>(0,02+0,00035X) µm<br/7>X: Radial distance from center (mm)
Rotational speed	2, 4, 6, 10 rpm
Max. probing Ø	256 mm
Max. workpiece Ø	580 mm
Max. turntable loading	30 kg
Centering range	±3 mm
Leveling range	±1°
Vertical column	
Max. probing height	**AS :** 300 mm<br/7>**AH:** 500 mm<br/7>above turntable surface
Max. probing depth	104 mm (minimum ID : ø32 mm)<br/7>26 mm (minimum ID : ø12,7 mm)
Straightness	**AS / AH :** 0,1 µm / 100 mm<br/7>**AS :** 0,15 µm / 300 mm<br/7>**AH :** 0,25 µm / 500 mm
Parallelism with rotation center	**AS :** 0,7 µm / 300 mm<br/7>**AH :** 1,2 µm / 500 mm
Horizontal axis	
Straightness	0,7 µm / 150 mm
Perpendicularity to rotation center	1 µm / 150 mm
Software	**ROUNDPAK** FORMTRACEPAK-AP (optional for roughness detection unit)

Optional accessories

No.	Description
12AAG419	Roughness detection unit CNC, 0,75mN
12AAK110	Vibration isolator
12AAK120	Monitor arm, for vibration isolator 12AAK120
12AAL019	Side table
K551134	eco-fix Kit Form L, CMM fixtures, eco-fix series

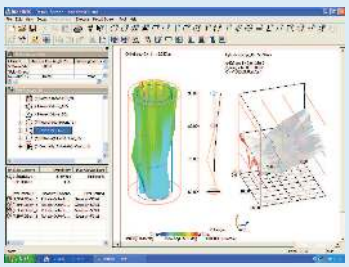

ROUNDPAK
Simple to operate even with a full set of parameters and analysis functions.

Refer to ROUNDTEST RA-2200 brochure

All products to be sold to commercial customers.
Product illustrations are without obligation. Product descriptions, in particular any and all technical specifications, are only binding when explicitly agreed upon.

Roundtest Extreme RA-H5200CNC

Series 211 - High-precision Roundness/Cylindricity Measuring System

This is a CNC form measuring instrument that combines high accuracy with automatic CNC measurements.

The Roundtest Extreme RA-H5200CNC offers you the following benefits:

- An integrated vibration isolator helps you to measure within best conditions.
- It will greatly improve your productivity and efficiency.
- You can take highly accurate, fast and operator-free measurements.
- The user friendly software, ROUNDPAK, gives you easy drag and drop usage and a wide range of parameters.
- ROUNDPAK also has easy-to-use part programming and single measurement functions.
- An automatic centering and leveling turntable A.A.T. (Automatic Adjustment Table) is supplied as standard, freeing you from the centering and leveling task.

RA-H5200CNC + side table [12AAL019]

No.	Model	Centering/leveling adjustment 1*	Vertical travel	Max. probing Ø [mm]	Max. workpiece ø [mm]
211-533D	RA-H5200CNC AS	AAT	350 mm	356	680
211-534D	RA-H5200CNC AH	AAT	550 mm	356	680

1* AAT : Automatic Adjustment Table

Specifications

Turntable	
Rotational accuracy	**Radial:** 7>(0,02+0,00035H) µm 7>H: Measuring height from turntable surface (mm) **Axial:** 7>(0,02+0,00035X) µm 7>X: Radial distance from center (mm)
Rotational speed	2, 4, 6, 10 rpm 7>Auto centering: 20 rpm
Max. probing Ø	356 mm
Max. workpiece Ø	680 mm
Max. turntable loading	80 kg without auto centering 65 kg
Centering range	±5 mm
Leveling range	±1°
Vertical column	
Max. probing height	**AS :** 350 mm 7>**AH:** 550 mm 7>above turntable surface
Max. probing depth	104 mm (minimum ID : ø32 mm) 7>26 mm (minimum ID : ø12,7 mm)
Parallelism with rotation center	**AS :** 0,2 µm / 350 mm 7>**AH :** 0,32 µm / 550 mm
Horizontal axis	
Straightness	0,4 µm / 200 mm
Perpendicularity to rotation center	0,5 µm / 200 mm
Software	**ROUNDPAK** FORMTRACEPAK-AP (optional for roughness detection unit)
Optional accessories	Other optional and standard accessories are listed later in this section for accessories and styli.

Optional accessories

No.	Description
12AAG419	Roughness detection unit CNC, 0,75mN
12AAL019	Side table
K551134	eco-fix Kit Form L, CMM fixtures, eco-fix series

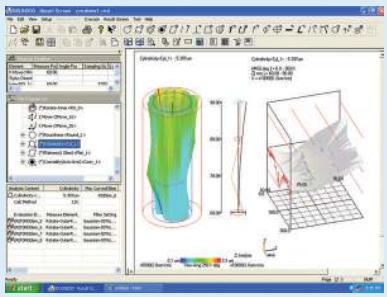

ROUNDPAK
Simple to operate even with a full set of parameters

All products to be sold to commercial customers.
Product illustrations are without obligation. Product descriptions, in particular any and all technical specifications, are only binding when explicitly agreed upon.

Mitutoyo

Roundtest Extreme RA-6000CNC

Series 211 – Large size Form Measuring Instrument

This is a fully automatic CNC form measuring instrument for heavy and accurate workpieces.

The Roundtest Extreme RA-6000CNC offers you the following benefits:

- Huge measuring range of 1050 mm in height for long workpieces
- Wide probing range enables measurements of form parameters of huge-diameter workpieces
- Maximum loading capacity of 350 kg for heavy and big size workpieces
- Highly-accurate measurements of large workpieces
- Fully automatic measurement provides fast and accurate processing
- ROUNDPAK software also comprises easy-to use part programing and single measurement functions
- A highly accurate automatic centering and leveling turntable A.A.T. (Automatic Adjustment Table) is supplied as standard, rendering manual centering and leveling redundant

Specifications

Turntable	
Rotational accuracy	**Radial:** (0,05+0,0006H) µm H: Measuring height from turntable surface (mm) **Axial:** (0,05+0,0006X) µm X: Radial distance from center (mm)
Rotational speed	2, 4, 6 rpm
Centering range	±5 mm
Leveling range	±1°
Vertical column	
Max. probing height	1050 mm

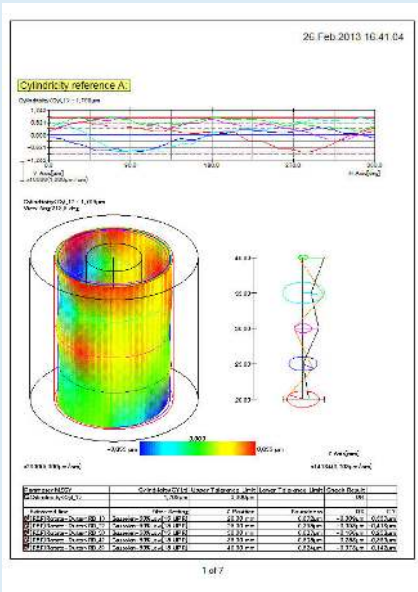

ROUNDPAK
Simple to operate even with a full set of parameters and analysis functions

No.	Centering/leveling adjustment 1*	Model	Vertical travel	Max. probing Ø [mm]	Max. workpiece ø [mm]	Max. turntable loading [kg]
211-591-11	AAT	RA-6000CNC	1050 mm	880	900	350

1* AAT : Automatic Adjustment Table

All products to be sold to commercial customers.
Product illustrations are without obligation. Product descriptions, in particular any and all technical specifications, are only binding when explicitly agreed upon.

Roundtracer Flash

Serie 211 - Form Measuring Instrument

The Roundtracer Flash is a flexible optical measuring system, fast and precise. The instrument is a good solution for accurate quality control in a laboratory as well as in the production environment.

The Roundtracer Flash offers you following benefits:

- Dimensional, position, form analysis in static or dynamic mode.
- Image sensors integrated in a fixed position across the product structure to cover the entire measurement range.
- Less mechanical stress
- Side-by-side 2D image architecture
- Short cycle time
- One-click measuring cycle activation
- Graphical user interface via touchscreen monitor
- Easy part loading
- Thread and camshaft measurement functionality

Specifications

Range Z-axis	100 / 300 mm
Measuring range Ø [mm]	60
Max. turntable loading	6 kg

Optional accessories

No.	Description
12AAX422MEU	3-jaw chuck incl. shank set
12AAX423MEU	Face plate incl. shank set
12AAX424MEU	6-jaw chuck incl. shank set
12AAX425MEU	Pivoting Arm for the Display, for Roundtracer Flash
12AAX426MEU	Industrial Keyboard, for Roundtracer Flash
12AAX427MEU	Verification Master for S100, for Roundtracer Flash
12AAX429MEU	Verification Master for S300, for Roundtracer Flash

Home screen

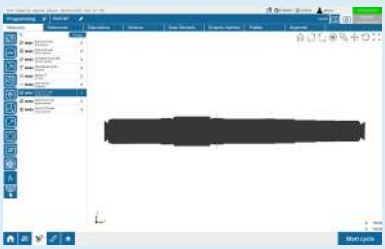

Programming screen

Result screen

Roundtracer Flash with optional pivot arm

No.	Model	Range Z-axis [mm]	Measuring range Ø [mm]
211-581-01MEU	Roundtracer Flash S100	100	60
211-583-01MEU	Roundtracer Flash S300	300	60

All products to be sold to commercial customers.
Product illustrations are without obligation. Product descriptions, in particular any and all technical specifications, are only binding when explicitly agreed upon.

Roundtracer Extreme RTX-605-A

Serie 211 - Form Measuring Instrument

Full-fledged CNC roundness measuring system with dramatically-enhanced measurement flexibility, measurement throughput, and measurement result reproducibility.
A complete new system which can combine form, contour and surface roughness measurement into one device.

The Roundtracer Extreme offers you following benefits:

- 3 in 1
- Motorized detector slider
- Stylus positioning
- High measurement throughput
- High reproducibility & repeatability
- Enhanced optional measurement functions like contour & surface roughness and twist measurement

No.	Model	Centering/leveling adjustment 1*	Vertical travel	Max. workpiece Ø [mm]	Max. probing Ø [mm]	Max. turntable loading [kg]
211-552-12	RTX-605-A	AAT	550mm	680	328	60

1* AAT Automatic adjustment table

Specifications

Turntable	
Rotational accuracy	**Radial**: (0,02+0,00035H)µm H: Measuring height (mm) **Axial**: (0,02+0,00035R)µm R: Measuring radius (mm)
Max. turntable loading [kg]	60
Vertical column	
Max. measurement height	500 mm

Form measurement

Contour measurement

Surface roughness measurement

All products to be sold to commercial customers.
Product illustrations are without obligation. Product descriptions, in particular any and all technical specifications, are only binding when explicitly agreed upon.

Optional Styli for Roundtest

Interchangeable styli for RA-10, RA-120, RA-120P, RA-1600, RA-2200, RA-H5200

Standard accessories

No.	Description
12AAL021	Standard stylus

Optional accessories

No.	Description
12AAL022	Stylus for notches, Ø3 mm, tungsten carbide
12AAL023	Stylus for deep groove, R 0,25 mm, Sapphire
12AAL024	Stylus for corner, R 0,25 mm, Sapphire
12AAL025	Stylus for cutter marks, R 15 mm, tungsten carbide
12AAL026	Stylus for small holes, Ø0,8 mm, tungsten carbide
12AAL027	Stylus for small holes, Ø1 mm, tungsten carbide
12AAL028	Stylus for small holes, Ø1,6 mm, tungsten carbide
12AAL029	Stylus for extra small hole, Ø0,5 mm, tungsten carbide
12AAL030	Stylus ball type, Ø1,6 mm, tungsten carbide
12AAL031	Stylus disc type, Ø12 mm
12AAL032	Stylus for cranks, Ø0,5 mm, tungsten carbide
12AAL033	Stylus for cranks, Ø1 mm, tungsten carbide
12AAL034	Stylus for flat surface, tungsten carbide
12AAL035	Stylus 2X-long standard type, Ø1,6 mm, tungsten carbide*1
12AAL036	Stylus 2X-long type for notches, Ø3 mm, tungsten carbide*1
12AAL037	Stylus 2X-long type for deep grooves, R 0,25 mm, Sapphire*1
12AAL038	Stylus 2X-long type for corners, R 0,25 mm, Sapphire*1
12AAL039	Stylus 2X-long type for cutter marks, R 15 mm, tungsten carbide*1
12AAL040	Stylus 2X-long type for small hole, Ø1 mm, tungsten carbide*1
12AAL041	Stylus 3X-long standard type, Ø1,6 mm, tungsten carbide*1
12AAL042	Stylus 3X-long type for deep grooves, R 0,25 mm, Sapphire*1
12AAL043	Stylus shank, for mounting M2-CMM stylus
12AAL044	Stylus shank for grooves, for mounting M2-CMM stylus
12AAL045	Stylus shank 2X-long type for grooves, for mounting M2-CMM stylus*1

*1 Not available for RA-10, RA-120, RA-120P
*2 Measuring is only possible in the vertical direction

Notches

Flat surface

Cutter marks

Corner

Small hole

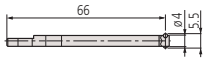

12AAL021 - Standard
ø 1,6 mm tungsten carbide

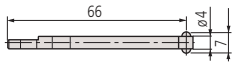

12AAL022 - Notch
ø 3 mm tungsten carbide

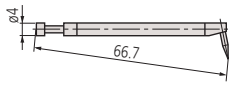

12AAL023 - Deep groove
R 0,25 mm sapphire

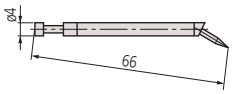

12AAL024 - Corner
R 0,25 mm sapphire

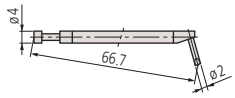

12AAL025 - Cutter mark
R 15 mm tungsten carbide

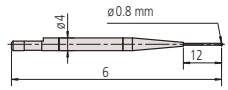

12AAL026 - Small hole
ø 0,8 mm tungsten carbide

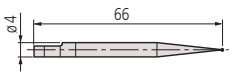

12AAL027- Small hole
ø 1 mm tungsten carbide

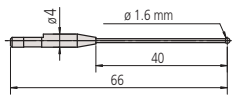

12AAL028 - Small hole
ø 1,6 mm tungsten carbide

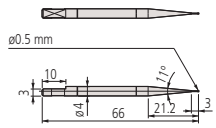

12AAL029- Extra small hole
ø 0,5 mm tungsten carbide

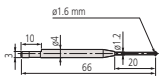

12AAL030- ø 1,6 mm ball
ø 1,6 mm tungsten carbide

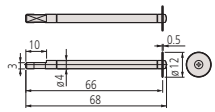

12AAL031- Disc
ø 12 mm

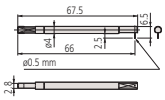

12AAL032- Crank
ø 0,5 mm tungsten carbide

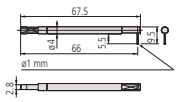

12AAL033- Crank
ø 1 mm tungsten carbide

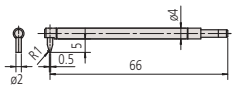

12AAL034- Flat surface
Tungsten carbide

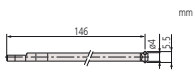

12AAL035- 2X-long standard
ø 1,6 mm tungsten carbide

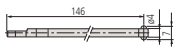

12AAL036- 2X-long notch
ø 3 mm tungsten carbide

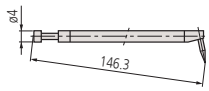

12AAL037- 2X-long deep groove
R 0,25 mm sapphire

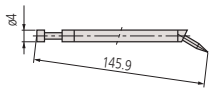

12AAL038- 2X-long corner
R 0,25 mm sapphire

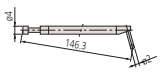

12AAL039- 2X-long type cutter mark
R 15 mm tungsten carbide

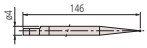

12AAL040- 2X-long small hole
ø 1 mm tungsten carbide

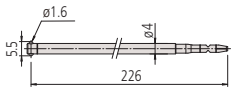

12AAL041- 3X-long standard
ø 1,6 mm tungsten carbide

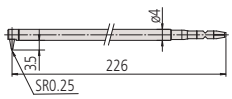

12AAL042- 3X-long deep groove
R 0,25 mm sapphire

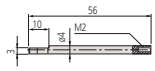

12AAL043- Stylus shank
for mounting M2 - CMM stylus

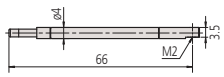

12AAL044- Stylus shank groove
for mounting M2 - CMM stylus

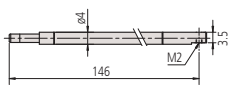

12AAL045- Stylus shank 2X groove
for mounting M2 - CMM stylus

All products to be sold to commercial customers.
Product illustrations are without obligation. Product descriptions, in particular any and all technical specifications, are only binding when explicitly agreed upon.

Mitutoyo

Optional Styli for Roundtest

Interchangeable styli for RA-2200CNC, RA-H5200CNC, RA-6000CNC

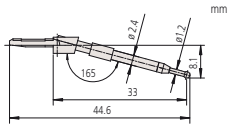

12AAE301 - Standard
ø 1,6 mm tungsten carbide

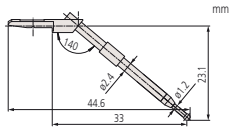

12AAE302 - Flat surface
ø 1,6 mm tungsten carbide

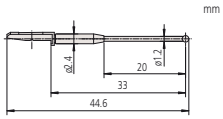

12AAE303 - ø 1,6 mm ball
ø 1,6 mm tungsten carbide

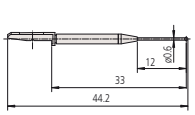

12AAE304 - ø 0,8 mm ball
ø 0,8 mm tungsten carbide

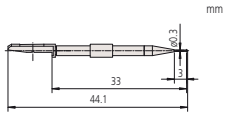

12AAE305 - ø 0,5 mm ball
ø 0,5 mm tungsten carbide

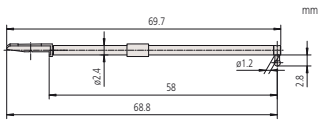

12AAE306 - Deep hole
ø 1,6 mm tungsten carbide

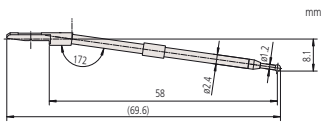

12AAE307 - Deep hole
ø 1,6 mm tungsten carbide

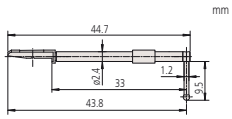

12AAE308 - Deep groove
ø 1,6 mm tungsten carbide

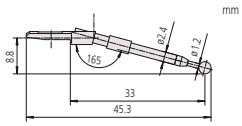

12AAE309 - Notch
ø 3 mm tungsten carbide

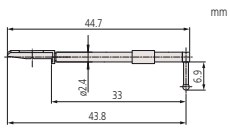

12AAE310 - Groove
ø 1,6 mm tungsten carbide

Standard accessories

No.	Description
12AAE301	Stylus standard type for CNC, Ø1,6 mm, tungsten carbide
12AAE302	Stylus for flat surfaces for CNC, Ø1,6 mm, tungsten carbide

Optional accessories

No.	Description
12AAE303	Ball stylus for CNC, Ø1,6 mm, tungsten carbide
12AAE304	Ball stylus for CNC, Ø0,8 mm, tungsten carbide
12AAE305	Ball stylus for CNC, Ø0,5 mm, tungsten carbide
12AAE306	Stylus for deep holes, Ø1,6 mm, tungsten carbide
12AAE307	Stylus for deep holes, Ø1,6 mm, tungsten carbide
12AAE308	Stylus for deep grooves, Ø1,6 mm, tungsten carbide
12AAE309	Stylus for notches, Ø3,0 mm, tungsten carbide
12AAE310	Stylus for grooves, Ø1,6 mm, tungsten carbide

All products to be sold to commercial customers.
Product illustrations are without obligation. Product descriptions, in particular any and all technical specifications, are only binding when explicitly agreed upon.

Optional Accessories for Roundtest

Optional accessories for Roundtest and Roundtest Extreme

356038

Auxiliary stage for a low-height workpiece

No.	Description
356038	Used for measuring a workpiece whose diameter is 40 mm or less and whose height is 20 mm or less

211-032

Chuck - Quick chuck

This chuck is useful when measuring small workpieces. You can easily clamp them with its knurled ring.

No.	Holding capacity [mm]	External dimensions [mm]
211-032.	Internal jaw: ID = ø 16 - 69 External jaw: OD = ø 1 - 79	ø118 x 41

211-031

Chuck - Quick chuck

This Chuck is useful when measuring small workpieces. You can easily clamp them with its knurled ring.

No.	Holding capacity [mm]	External dimensions [mm]
211-031.	Internal jaw: ø 0,1 - 1,5	ø 118 x 48,5

211-014

Chuck - Three jaw chuck (key operated)

No.	Holding capacity [mm]	External dimensions [mm]
211-014	Internal jaw: ID = ø 25 - 68 Internal jaw: OD = ø 2 - 35 External jaw: OD = ø 35 - 78	ø157 x 70,6

350850

Cylindric square

No.	Cylindricity [µm]	Perpendicularity [µm]	Straightness [µm]
350850	2	3	1

Gauge block set for calibration

No.	Description
997090	Standard accessory for RA-2200, RA-2200CNC Standard accessory for RA-H5200 and RA-H5200CNC

Magnification checking gauge

No.	Graduation [µm]
211-045	0,2

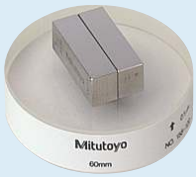

997090

Origin point gauge

No.	Description
998382	Standard accessory for RA-1600, RA-2200 and RA-H5200

211-045

Vibrator isolator and accessories (WxDxH)

No.	External dimensions [mm]	Description
12AAK110	830 x 800 x 700	Vibration isolator
12AAK120		Monitor arm
12AAL019	660 x 670 x 700	Side table
178-024	640 x 470 x 660	Stand for RA-2200 and RA-2200CNC
178-025	750 x 550 x 59	For RA-2200 and RA-2200CNC

998382

12AAK110 + 12AAK120

12AAK110 + 12AAL019

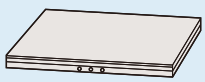

178-025

All products to be sold to commercial customers.
Product illustrations are without obligation. Product descriptions, in particular any and all technical specifications, are only binding when explicitly agreed upon.

Mitutoyo

Optional Software USB Communication Tool

Series 178 - Control Software for SJ series, SV-2100

This is a control software for Surftest SJ-210 / SJ-310 / SJ-410 / SJ-500 and SV-2100 which offers you the following benefits:

- It is available as a free download on www.mitutoyo.eu (registration is required).
- Output software is based on Microsoft® Excel® for controlling the devices, reproducing and storing measurement data.
- Measurement device control.
- It provides definition of measurement variables.
- Graphic representation of the profile.
- Storage of measurement records.
- Documentation of measurements result.
- A USB connecting cable is necessary.

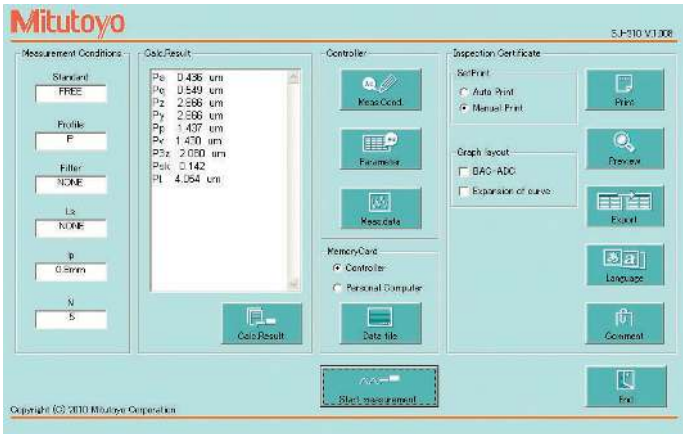

Input mask for Surftest SJ series

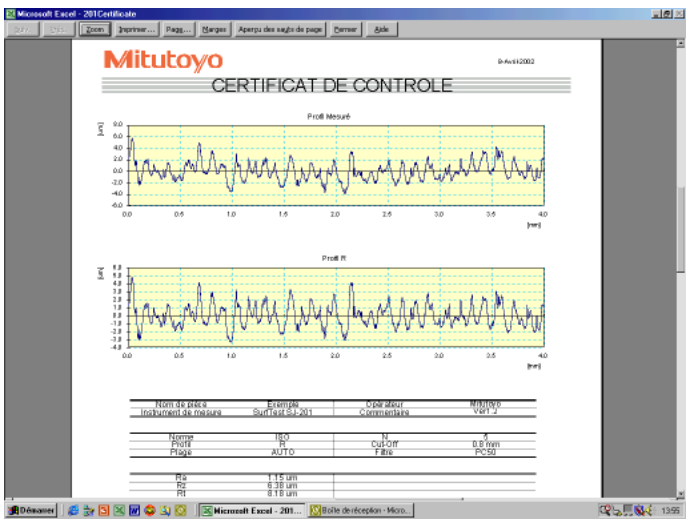

Output record from Microsoft® Excel® in 18 languages as standard.

Optional accessories

No.	Description
12AAD510	USB cable for SJ-310 / SJ-410 series
12AAH490	USB Cable for SJ-500 / SV-2100
63AAA211	USB communication cable for SJ-210, Length 1,8 mm

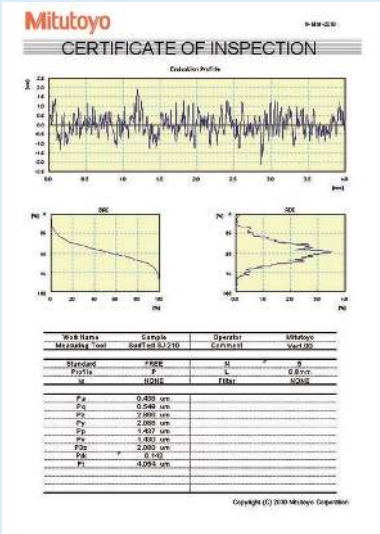

Output record from Microsoft® Excel®

All products to be sold to commercial customers.
Product illustrations are without obligation. Product descriptions, in particular any and all technical specifications, are only binding when explicitly agreed upon.

Optional Styli
for Surftest, Formtracer Avant and SV-C series

12AAG202 Extension rod 50 mm
(*not suitable for SJ-210/-310/-410)

12AAG203 Extension rod 100 mm
(*not suitable for SJ-210/-310/-410)

Detectors

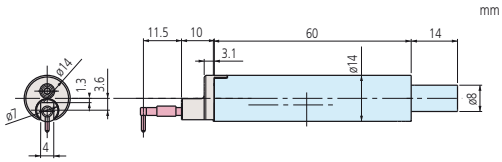

Order No	Measuring force		Inclusive stylus
178-396-2	0,75 mN	R2 µm, 60°	12AAC731
178-397-2	4 mN	R5 µm, 90°	12AAB403

No.	Radius	Angle
12AAE882	1 µm	60°
12AAE924	1 µm	90°
12AAC731	2 µm	60°
12AAB403	5 µm	90°
12AAB415	10 µm	90°
12AAE883	250 µm	60°

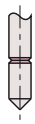

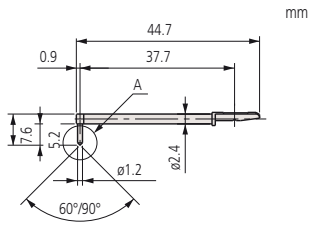

Standard

No.	Radius	Angle
12AAC732	2 µm	60°
12AAB404	5 µm	90°
12AAB416	10 µm	90°

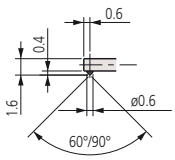

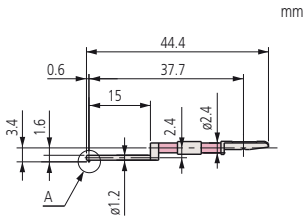

For small hole

No.	Radius	Angle
12AAC733	2 µm	60°
12AAB405	5 µm	90°
12AAB417	10 µm	90°

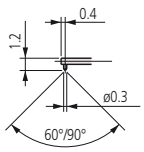

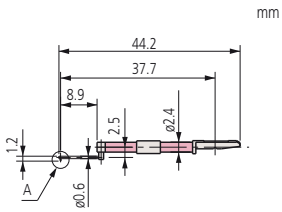

For extra-small hole

No.	Radius	Angle
12AAJ662	250 µm	-

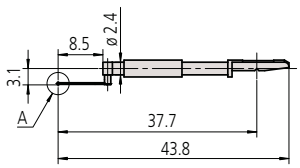

For ultra-small hole

All products to be sold to commercial customers.
Product illustrations are without obligation. Product descriptions, in particular any and all technical specifications, are only binding when explicitly agreed upon.

Mitutoyo

Optional Styli
for Surftest, Formtracer Avant and SV-C series

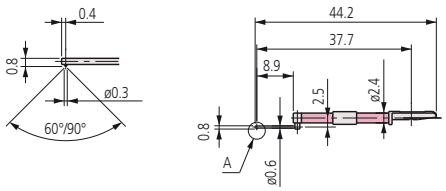

mm

No.	Radius	Angle
12AAC734	2 µm	60°
12AAB406	5 µm	90°
12AAB418	10 µm	90°

For ultra-small hole

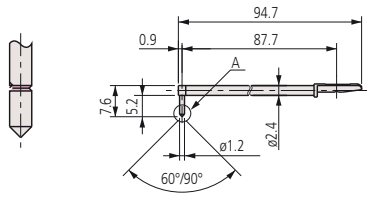

mm

No.	Radius	Angle
12AAC740	2 µm	60°
12AAB413	5 µm	90°
12AAB425	10 µm	90°

For deep hole [double-length]

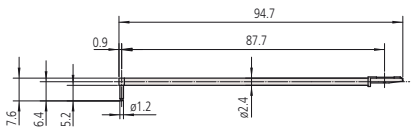

mm

No.	Radius	Angle
12AAE886	250 µm	60°

For rolling circle waviness [double-length]

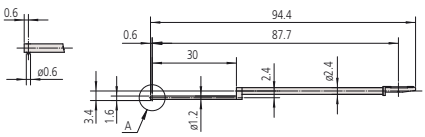

mm

No.	Radius	Angle
12AAE892	2 µm	60°
12AAE908	5 µm	90°

For small deep hole [double-length]

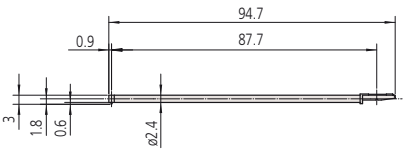

mm

No.	Radius	Angle
12AAE898	2 µm	60°
12AAE914	5 µm	90°

For deep hole [double-length]

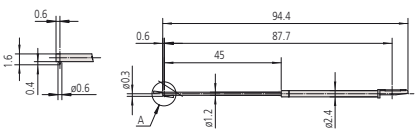

mm

No.	Radius	Angle
12AAE938	2 µm	60°
12AAE940	5 µm	90°

For small slotted hole [double-length]

All products to be sold to commercial customers.
Product illustrations are without obligation. Product descriptions, in particular any and all technical specifications, are only binding when explicitly agreed upon.

Optional Styli
for Surftest, Formtracer Avant and SV-C series

No.	Radius	Angle
12AAC741	2 µm	60°
12AAB414	5 µm	90°
12AAB426	10 µm	90°

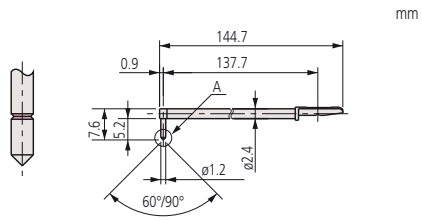

For deep hole [triple-length]

No.	Radius	Angle
12AAC735	2 µm	60°
12AAB409	5 µm	90°
12AAB421	10 µm	90°

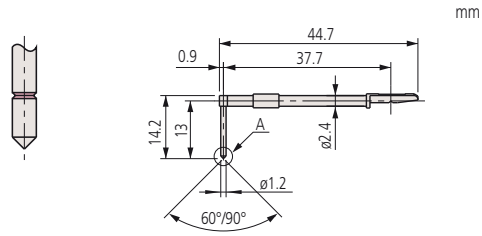

For deep groove 10 mm

No.	Radius	Angle
12AAC736	2 µm	60°
12AAB408	5 µm	90°
12AAB420	10 µm	90°

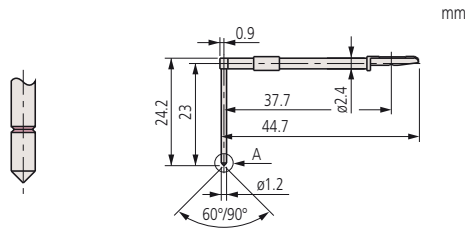

For deep groove 20 mm

No.	Radius	Angle
12AAE893	2 µm	60°
12AAE909	5 µm	90°

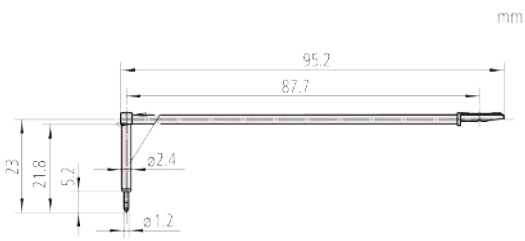

For deep groove 20 mm [double-length]

No.	Radius	Angle
12AAC737	2 µm	60°
12AAB407	5 µm	90°
12AAB419	10 µm	90°

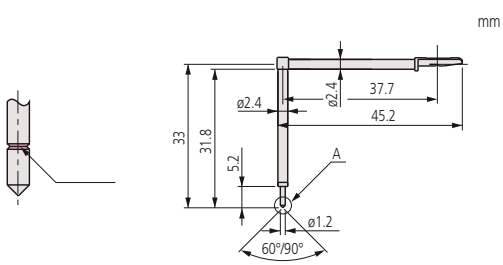

For deep groove 30 mm

All products to be sold to commercial customers.
Product illustrations are without obligation. Product descriptions, in particular any and all technical specifications, are only binding when explicitly agreed upon.

Mitutoyo

Optional Styli
for Surftest, Formtracer Avant and SV-C series

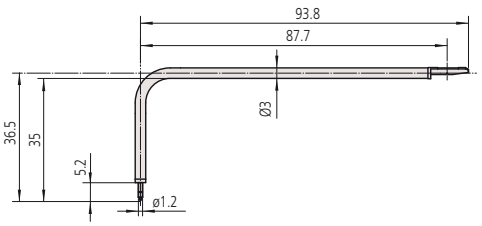

mm

No.	Radius	Angle
12AAE894	2 µm	60°
12AAE910	5 µm	90°

For deep groove 30 mm [double-length]

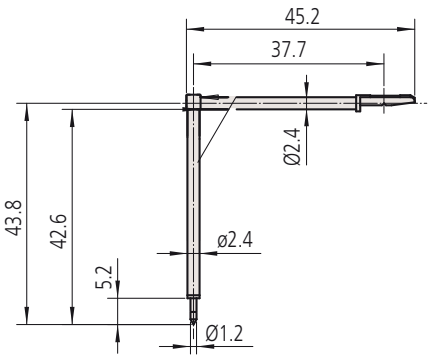

mm

No.	Radius	Angle
12AAE895	2 µm	60°
12AAE911	5 µm	90°

For deep groove 40 mm

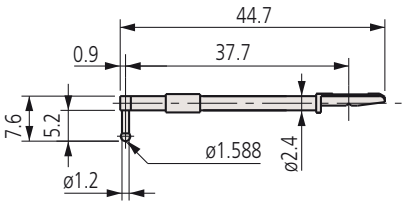

mm

No.	Radius
12AAB338	0,8 mm

For rolling circle waviness surface roughness (Roughness specimen 178-611 required)

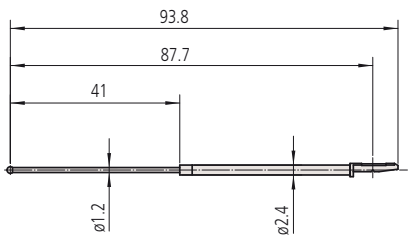

mm

No.	Radius
12AAE884	0,8 mm

For rolling circle waviness surface roughness [double-length] (178-611 required)

All products to be sold to commercial customers.
Product illustrations are without obligation. Product descriptions, in particular any and all technical specifications, are only binding when explicitly agreed upon.

Optional Styli
for Surftest, Formtracer Avant and SV-C series

No.	Radius	Angle
12AAE899	2 µm	60°
12AAE915	5 µm	90°

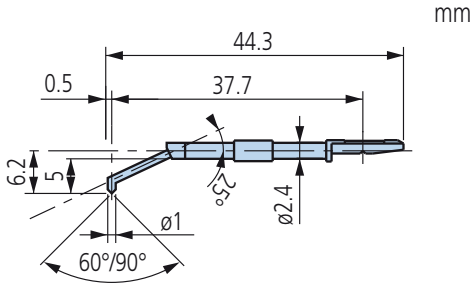

For hole bottom

No.	Radius	Angle
12AAC739	2 µm	60°
12AAB412	5 µm	90°
12AAB424	10 µm	90°

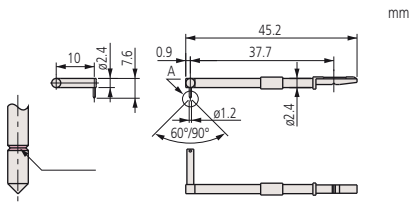

For eccentric arm

No.	Radius	Angle
12AAM601	2 µm	60°
12AAM603	5 µm	60°

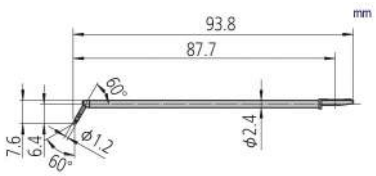

For corner

No.	Radius	Angle
12AAB339	2 µm	60°
12AAB410	5 µm	90°
12AAB422	10 µm	90°

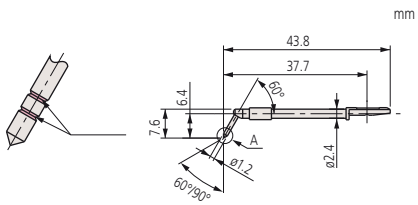

For gear tooth

No.	Radius	Angle
12AAE896	2 µm	60°
12AAE912	5 µm	90°

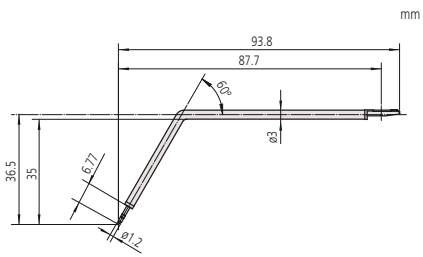

For gear tooth [double-length]

No.	Radius	Angle
12AAC738	2 µm	60°
12AAB411	5 µm	90°
12AAB423	10 µm	90°

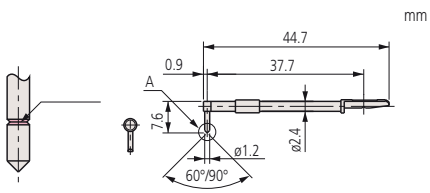

For knife-edge

All products to be sold to commercial customers.
Product illustrations are without obligation. Product descriptions, in particular any and all technical specifications, are only binding when explicitly agreed upon.

Mitutoyo

Optional Styli and Arms for Contracer, Formtracer Avant and SV-C Series

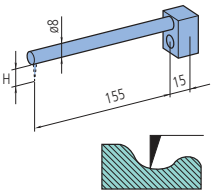

Arm straight type
CV-2100

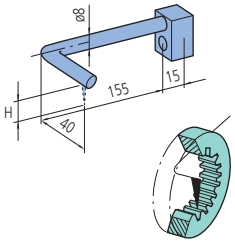

Arm eccentric type
CV-2100

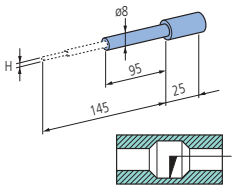

Arm for small-hole stylus
CV-2100

Applicable arms for CV-2100

No.	Arm	Arm No.	Compatible stylus height (H) [mm]
935110	Small hole	AB-11	0,4 / 1 / 2,5
935111	Straight type	AB-51	6
935112	Straight type	AB-61	12
935113	Straight type	AB-71	20
935114	Straight type	AB-81	30
935115	Straight type	AB-91	42
935116	Eccentric type	AB-52	6
935117	Eccentric type	AB-62	12
935118	Eccentric type	AB-72	20
935119	Eccentric type	AB-82	30
935120	Eccentric type	AB-92	42

Applicable arms for FTA-C3000 / FTA-C4000 / FTA-D3000 / FTA-D4000 / SV-C4500CNC

No.	Arm	Arm No.	Compatible stylus height (H) [mm]
12AAQ762	Eccentric arm	AB-37	SPH-5*, 6*, 7*, 8*, 9*
12AAM101	Straight type	AB-31	SPH-5*, 6*, 7*,8*,9*, SPHW-56, 66, 76
12AAM103	Small hole	AB-33	SPH-41, SPH-42, SPH-43

Applicable styli for CV-2100

No.	Stylus	Stylus No.	Stylus height (H) [mm]
932693	Small hole, carbide-tipped one-sided cut	SP-11	0,4
932694	Small hole, carbide-tipped one-sided cut	SP-12	1
932695	Small hole, carbide-tipped one-sided cut	SP-13	2,5
12AAE873	Small hole, carbide-tipped cone	SP-31	0,4
12AAE874	Small hole, carbide-tipped cone	SP-32	1
12AAE875	Small hole, carbide-tipped cone	SP-33	2,5

Applicable styli for FTA-C3000 / FTA-C4000 / FTA-D3000 / FTA-D4000 / SV-C4500CNC

No.	Stylus	Stylus No.	Stylus height (H) [mm]
12AAM104	Small hole, carbide tipped one sided cut	SPH-41	2
12AAM105	Small hole, carbide tipped one sided cut	SPH-42	4
12AAM106	Small hole, carbide tipped one sided cut	SPH-43	6,5

Arm and stylus set

No.	Included arms	Included styli	Included arm stylus	Applicable models
12AAR587	AB-33, AB-37	SPH-41, -43, -51, -72, -76		FTA-C3000, FTA-C4000, FTA-D3000, FTA-D4000, SV-C4500CNC
12AAR588	AB-33, AB-37	SPH-41, -43, -51, -72, -76, SPHW-66, -76	SPHW-32	FTA-C4000, FTA-D4000, SV-C4500CNC

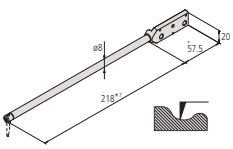

Arm straight type
FTA-C3000 / FTA-C4000
FTA-D3000 / FTA-D4000
SV-C4500CNC

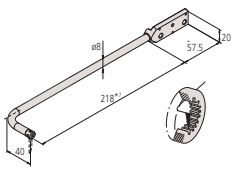

Arm eccentric type
FTA-C3000 / FTA-C4000
FTA-D3000 / FTA-D4000
SV-C4500CNC

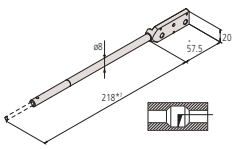

Arm for small-hole stylus
CV-2100 / FTA-C3000
FTA-C4000 / FTA-D3000
FTA-D4000 / SV-C4500CNC

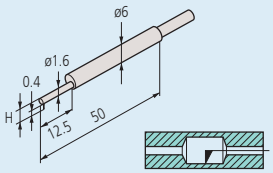

Small hole: 932693 / 12AAE873
Tip shape: Single bevel / Cone
Tip angle: 20° / 30°
Tip radius: 25 µm / 25 µm
Tip material: Carbide / Carbide

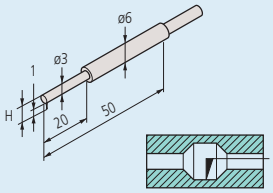

Small hole: 932694 / 12AAE874
Tip shape: Single bevel / Cone
Tip angle: 20° / 30°
Tip radius: 25 µm / 25 µm
Tip material: Carbide / Carbide

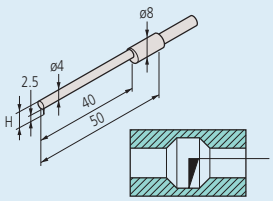

Small hole: 932695 / 12AAE875
Tip shape: Single bevel / Cone
Tip angle: 20° / 30°
Tip radius: 25 µm / 25 µm
Tip material: Carbide / Carbide

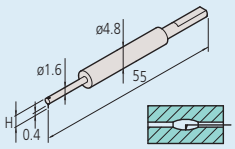

Small hole: 12AAM104
Tip shape: One-sided cut
Tip angle: 20°
Tip radius: 25 µm
Tip material: Carbide

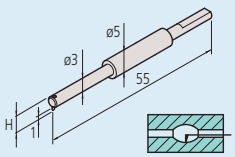

Small hole: 12AAM105
Tip shape: One-sided cut
Tip angle: 20°
Tip radius: 25 µm
Tip material: Carbide

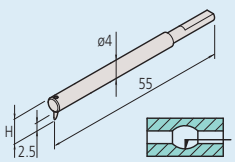

Small hole: 12AAM106
Tip shape: One-sided cut
Tip angle: 20°
Tip radius: 25 µm
Tip material: Carbide

All products to be sold to commercial customers.
Product illustrations are without obligation. Product descriptions, in particular any and all technical specifications, are only binding when explicitly agreed upon.

Optional Styli and Arms for Contracer, Formtracer Avant and SV-C Series

Styli

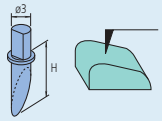

Single bevel
Tip angle: 12°
Tip radius: 25 µm
Tip material: Carbide

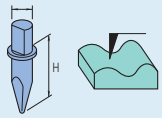

Cross ground
Tip angle: 20°
Tip radius: 25 µm
Tip material: Carbide

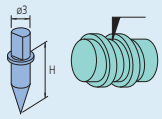

Cone
Tip angle: 30°/50°
Tip radius: 25 µm
Tip material: Carbide / Sapphire / Diamond
(355129: 50°, Diamond)

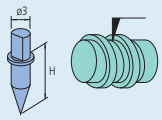

Cone
Tip angle: 20°
Tip radius: 25 µm
Tip material: Carbide

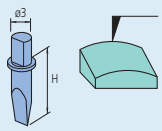

Knife edge
Tip angle: 20°
Edge width: 3 mm
Tip radius: 25 µm
Tip material: Carbide

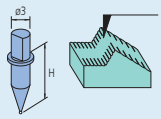

Ball
Ball: ø1 mm
Tip material: Carbide

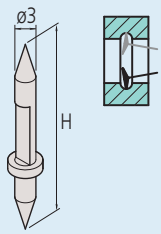

Both sides conical stylus
Tip angle: 30°
Tip radius: 25 µm
Tip material: Carbide

Applicable styli for
CV-2100 / FTA-C3000 / FTA-C4000 / FTA-D3000 / FTA-D4000 / SV-C4500CNC

No.	Stylus	Stylus No.	Stylus height (H) [mm]
354882	Single bevel, carbide tipped	SPH-51	6
354883	Single bevel, carbide tipped	SPH-61	12
354884	Single bevel, carbide tipped	SPH-71	20
354885	Single bevel, carbide tipped	SPH-81	30
354886	Single bevel, carbide tipped	SPH-91	42
354887	Cross ground, carbide tipped	SPH-52	6
354888	Cross ground, carbide tipped	SPH-62	12
354889	Cross ground, carbide tipped	SPH-72	20
354890	Cross ground, carbide tipped	SPH-82	30
354891	Cross ground, carbide tipped	SPH-92	42
12AAE865	Cone, carbide-tipped angle 20°	SPH-57	6
12AAE866	Cone, carbide-tipped angle 20°	SPH-67	12
12AAE867	Cone, carbide-tipped angle 20°	SPH-77	20
12AAE868	Cone, carbide-tipped angle 20°	SPH-87	30
12AAE869	Cone, carbide-tipped angle 20°	SPH-97	42
354892	Cone, sapphire-tipped angle 30°	SPH-53	6
354893	Cone, sapphire-tipped angle 30°	SPH-63	12
354894	Cone, sapphire-tipped angle 30°	SPH-73	20
355129	Cone, diamond-tipped angle 50°	SPH-79	20
354895	Cone, sapphire-tipped angle 30°	SPH-83	30
354896	Cone, sapphire-tipped angle 30°	SPH-93	42
12AAA566	Cone, carbide-tipped angle 30°	SPH-56	6
12AAA567	Cone, carbide-tipped angle 30°	SPH-66	12
12AAA568	Cone, carbide-tipped angle 30°	SPH-76	20
12AAA569	Cone, carbide-tipped angle 30°	SPH-86	30
12AAA570	Cone, carbide-tipped angle 30°	SPH-96	42
354897	Knife edge, carbide tipped	SPH-54	6
354898	Knife edge, carbide tipped	SPH-64	12
354899	Knife edge, carbide tipped	SPH-74	20
354900	Knife edge, carbide tipped	SPH-84	30
354901	Knife edge, carbide tipped	SPH-94	42
354902	Ball, carbide tipped	SPH-55	6
354903	Ball, carbide tipped	SPH-65	12
354904	Ball, carbide tipped	SPH-75	20
354905	Ball, carbide tipped	SPH-85	30
354906	Ball, carbide tipped	SPH-95	42

Applicable styli for only FTA-C4000 / FTA-D4000 / SV-C4500CNC

No.	Stylus	Stylus No.	Stylus height (H) [mm]
12AAT469	Both sides small hole arm stylus 20°	SPHW-21	2,4
12AAT470	Both sides small hole arm stylus 20°	SPHW-22	5
12AAM095	Both sides conical stylus	SPHW-56	20
12AAM096	Both sides conical stylus	SPHW-66	32
12AAM097	Both sides conical stylus	SPHW-76	48
12AAM108	Both sides small hole arm stylus	SPHW-31	2,4
12AAM109	Both sides small hole arm stylus	SPHW-32	5
12AAM110	Both sides small hole arm stylus	SPHW-33	9

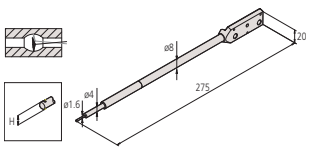

SPHW-31
SPHW-21

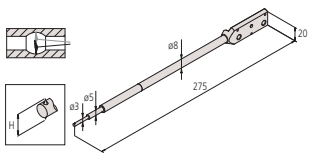

SPHW-32
SPHW-22

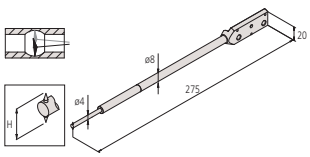

SPHW-33

All products to be sold to commercial customers.
Product illustrations are without obligation. Product descriptions, in particular any and all technical specifications, are only binding when explicitly agreed upon.

Mitutoyo

Optional Accessories for Surftest, Contracer and Formtracer

For SV series, Avant series, SV-C series, CS series and CNC models

Automatic-leveling table : 178-037 (for CNC models)
Automatic-leveling table : 178-087 (for SV, Avant, SV-C, CS)
This is a stage that performs fully automatic leveling as measurement starts, freeing the user from this troublesome operation. Fully automatic leveling can be done quickly by anyone. In addition, the operation is easy and reliable.

No.	Inclination adjustment angle	Maximum load [kg]	Effective table dimensions [mm]
178-037	± 2°	7	130 x 112
178-087	± 2°	7	130 x 112

178-087

Using 178-087

Micro-chuck
This chuck is suitable for clamping extra-small diameter workpieces (ø1.5 mm or less), which cannot be retained with the centering chuck.

No.	Dimensions [mm]	Retention range [mm]
211-031	ø118 x 48,5	OD: Ø 0,1 - Ø 1,5

211-031

Quick chuck
This chuck is useful when measuring small workpieces. You can easily clamp them with its knurled ring.

No.	Dimensions [mm]	Retention range [mm]
211-032	ø118 x 41	Inner latch : OD ø1 - ø36 Inner latch : ID ø16 - ø69 Outer latch : OD ø25 - ø79

211-032

Y-axis table
for Avant and CS-3300 models (not CNC models)
Enables efficient, automatic measurement of multiple aligned workpieces and multiple points on a single measurement surface. It allows semi-automatic measurement with non CNC models by using these items.

No.	Resolution	Travel range [mm]	Positioning accuracy [µm]	Maximum load [kg]	Drive speed
178-097	0,05	200	±3	50	Max. 80 mm/s

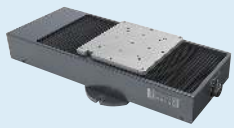
178-097

θ1-axis:*1
For efficient measurement in the axial / transverse directions. When measuring a cylindrical workpiece, automatic alignment can be performed in combination with the Y-axis table.
***1 = 12AAE630** mounting plate is required when directly installing on the base of the machine.

No.	Resolution	Rotational speed	Displacement	Maximum load [kg]
12AAD975	0,004°	Max. 10°/s	360°	12

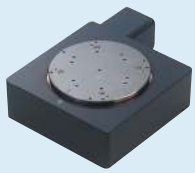
12AAD975

θ2-axis:*1
For efficent measurement of multiple points on a cylindrical workpiece and automate front/rear-side measurement.
***1 = 12AAE718** mounting plate is required when directly installing on the base of the machine.
***1 = 12AAE705** attachment plate is required when installing on θ1-axis table.
***1 = 12AAE707** mounting plate is required when directly installing on Y-axis table with automatic leveling table.

No.	Resolution	Rotational speed	Displacement	Maximum load [kg]
178-078	0,0072°	Max. 18°/s	360°	4

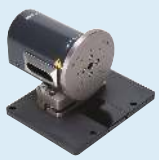
178-078

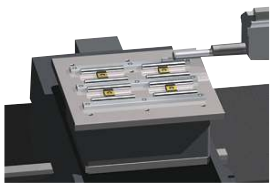
178-097
using Y-axis

12AAD975
using θ1-axis

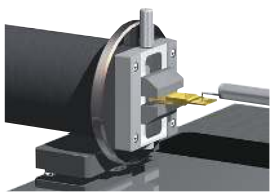
178-078
using θ2-axis

All products to be sold to commercial customers.
Product illustrations are without obligation. Product descriptions, in particular any and all technical specifications, are only binding when explicitly agreed upon.

Optional Accessories for Surftest, Contracer and Formtracer

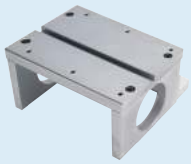

12AAG175

Calibration stage

No.	Description
12AAG175	For mounting a roughness specimen or step gauge during calibration

Cross-travel table

No.	Table top [mm]	XY travel [mm]
218-001	280 x 180	100 x 50
218-041	280 x 152	50 x 25

218-001

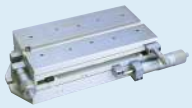

218-041

Digital three-axis adjustment table

No.	Description
178-047	This table helps to make the alignment adjustments required when measuring cylindrical surfaces. The corrections for the pitch angle and the swivel angle are determined from a preliminary measurement and the Digimatic micrometers are adjusted accordingly. A flat-surfaced workpiece can also be leveled with this table.

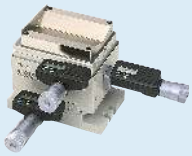

178-047

Digital XY leveling table

No.	Leveling range	Table top [mm]	XY travel [mm]
178-042-1	±1,5°	130 x 100	± 12,5

178-042-1

Precision V-Block

No.	Description
998291	Workpiece diameter : 1 mm to 160 mm Can be mounted on a leveling table

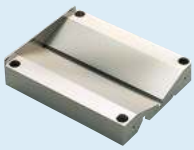

998291

Precision vise

No.	Description
178-019	Max. workpiece size : 36 mm Can be mounted on a leveling table

178-019

Rotary vise

No.	Description
218-003	Two-slide jaw type Max. workpiece size : ø60 mm Minimum reading : 1°

Vibration isolator

No.	Description
178-188	Standard base
178-189	Large type base

218-003

XY leveling table

No.	Leveling range	Table top [mm]	XY travel [mm]
178-016	±1,5°	130 x 100	
178-043-1	±1,5°	130 x 100	± 12,5

178-043-1

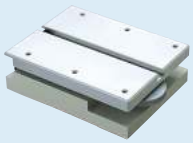

178-016

All products to be sold to commercial customers.
Product illustrations are without obligation. Product descriptions, in particular any and all technical specifications, are only binding when explicitly agreed upon.

Mitutoyo

Micro-Vickers Hardness HM-Series
Page 535

Vickers Hardness HV-Series
Page 540

Rockwell, Rockwell Superficial, Brinell
Page 549

Portable Hardness Testers
Page 558

All products to be sold to commercial customers.
Product illustrations are without obligation. Product descriptions, in particular any and all technical specifications, are only binding when explicitly agreed upon.

Micro-Vickers Hardness Testing Machines HM-210/220

Series 810

This is a high performance hardness testing machine that uses advanced technology and is ideal for quality control.
The manual line up of the HM-200 Series has the following benefits:

- 144 mm (5,7 inch) colored touchsreen display (Type A) with higher visibility, easy to operate user interface
- Digimatic output for report creation.
- USB stick data export
- Electromagnetic test force generation system for higher accuracy.
- A high performance optical system provides a high quality image of the indentation load.
- A long working distance greatly reduces the possibility of collision.
- A range of six different objectives: 2x, 5x, 10X, 20X, 50X and 100X for measuring the indentation images.
- LED lighting gives you an observation image in natural colour, with better contrast, as well as longer operation.
- You can set different kinds of conditions on a touch panel, and display test results for easy operation.
- Vickers, Knoop and KC fracture toughness measurement.
- Test force ranges from 0,05g to 2kg.

Touchscreen type

Software type

Specifications

Indenter / Objective turret	Motor driven and manual operation
Standard	ISO 6507-2, ISO 4545-2, JIS B 7725
Data output	RS-232C, Digimatic, USB 2 interface
XY stage [mm]	Travel range system A+B: 25 x 25 / 50 x 50 manual Travel range system C+D: 50 x 50 / 100 x 100 motorized
Arbitrary test force	1 type [Default: 245,2mN (25gf)]
Control panel	Built-in touch panel, 5,7" Color LCD (HM-210A/220A for System A), Control software (PC for System B/C/D)
External dimensions Main unit mass	System A: 315(W)×671(D)×595(H)mm/38,5kg System B/C/D: 315(W)×586(D)×741(H)mm/37,4kg
Functions	Calculation of Vickers / Knoop*2 hardness, and ceramic fracture toughness based on IF method (JIS R1697), 3 display format (standard, list, simple), GO/NG judgment, test condition guide, curve and user correction, hardness corresponding value, statistics calculation
Objective lens unit	Up to 4 pcs. mountable (one mounted 50X as standard)
Output	Digimatic, serial, USB2 series A (for memory)*1, USB2 B Type (for system communication)
Resolution of diagonal length of an indentation	Objective lens less than 50X: 0,1µm (Objective lens more than 50X: 0,01µm)
Specimen dimensions	System A/B: height 133mm, depth 160mm (when using manual XY stage 25X25) System C: height 112mm, depth 160mm, System D: height 72mm, depth 160mm
Test force control	Electromagnetic generation of force (force motor) and automatic control (load, duration, unload)
Turret drive	Motor-driven and manual operation

Hardness Testing Machines brochure on request

HM-210 Testforce range

No.	Test force									
HM-210	V.S.*	HV0,01	HV0,02	HV0,03	HV0,05	HV0,1	HV0,2	HV0,3	HV0,5	HV1
	mN	98,07	196,1	294,2	490,3	980,7	1.961,0	2.942,0	4.903,0	9.807,0
	(gf)	10,0	20,0	30,0	50,0	100,0	200,0	300,0	500,0	1.000,0

*V.S. = Vickers scale

HM-220 Testforce range

No.	Test force										
HM-220	V.S.*	HV0,00005	HV0,0001	HV0,0002	HV0,0003	HV0,0005	HV0,001	HV0,002	HV0,003	HV0,005	HV0,01
	mN	0,4903	0,9807	1,961	2,942	4,903	9,807	19,61	29,42	49,03	98,07
	(gf)	0,05	0,1	0,2	0,3	0,5	1,0	2,0	3,0	5,0	10,0
	V.S.*	HV0,02	HV0,03	HV0,05	HV0,1	HV0,2	HV0,3	HV0,5	HV1	HV2	
	mN	196,1	294,2	490,3	980,7	1.961,0	2.942,0	4.903,0	9.807,0	19.610,0	
	(gf)	20,0	30,0	50,0	100,0	200,0	300,0	500,0	1.000,0	2.000,0	

*V.S. = Vickers scales

All products to be sold to commercial customers.
Product illustrations are without obligation. Product descriptions, in particular any and all technical specifications, are only binding when explicitly agreed upon.

Mitutoyo

Micro-Vickers Hardness Testing Machines HM-210/220

Manual or complete automatic testing

System A

HM-210A/HM-220A

Features:

- Touch-panel operation
- Measurement of indentation dimensions using a measuring microscope
- Positioning using a manual XY stage

System B

HM-210B/HM-220B
Automatic measurement by AVPAK-20 eliminates operator measurement errors.

Features:

- Operation using AVPAK-20
- Automatic measurement of indentations
- Positioning using a manual XY stage

System C

HM-210C/HM-220C

Features:

- Operated using AVPAK-20
- Automatic indentation reading
- Automatic positioning with motorized XY stage

System D

HM-210D/HM-220D
Top-end model with autofocus

Features:

- Operated using AVPAK-20
- Automatic identation reading
- Automatic positioning with motorized XY stage
- Autofocusing

Vickers HDMI camera system
(To be used with manual Vickers testing machines)
The 1/3" 1.2 Mpixel HDMI camera and a 24"standard monitor enables observation and measurement of indentations at high magnification, thereby reducing operator error. Additionally, images can be stored on the included 16GB SD card. No PC needed due to built in processor. Scope of delivery includes HDMI cable and wireless mouse. Please order 63AAA356, 11AAC729 and NEC EA21N for complete set.

AVPAK-20 software 11AAE270-DEE for automatic hardness testing systems.
Software that supports control, testing and report creation related to hardness testing. Supports parameter setting and automatic measurement.

High-functionality PC and TFT monitor
Compatible with Windows® 10 Professional. Supports a wide-screen TFT and provides improved operability.
*depending the version

Optional accessories

No.	Description
63ETB601	500HV0,1 Vickers Hardness Reference Material, with ASTM E92 DAkkS calibration certificate, 30x30x6mm, steel
63ETB606	750HV0,1 Vickers Hardness Reference Material, with ASTM E92 DAkkS calibration certificate, 30x30x6mm, steel
63ETB635	500HV0,3 Vickers Hardness Reference Material, with ISO 6507-3 DAkkS calibration certificate, 30x30x6mm, steel
63ETB640	750HV0,3 Vickers Hardness Reference Material, with ISO 6507-3 DAkkS calibration certificate, 30x30x6mm, steel
63ETB670	500HV1 Vickers Hardness Reference Material, with ISO 6507-3 DAkkS calibration certificate, 30x30x6mm, steel
63ETB675	750HV1 Vickers Hardness Reference Material, with ISO 6507-3 DAkkS calibration certificate, 30x30x6mm, steel
810-017	Special vise, (opening width 100mm)
810-013	Sheet specimen table
810-014	Thin specimen table, (horizontal type)
810-015	Thin specimen table, (vertical type)
810-019	Tilting specimen table
810-020	Adjustable specimen holder, Ø15-30mm
810-018	Rotary table, 360°
810-084	Rotatable adjustable specimen table, Ø15-30mm / 360°
810-085	Sheet specimen table
810-095	Rotary tilting specimen table, vise Ø15-50mm
810-650-1	Resin mold specimen table, Ø25.4 mm
810-650-2	Resin mold specimen table, Ø30 mm
810-650-3	Resin mold specimen table, Ø31.75 mm
810-650-4	Resin mold specimen table, Ø38.1 mm
810-650-5	Specimen holder f. resin molded specimen, 1 specimen Ø40 mm
810-641	Vibration Isolator, (for testing machine)

Code number	Description
63AAA602	HDMI camera
11AAC729	C-mount
NEC EA241WM	24" monitor

All products to be sold to commercial customers.
Product illustrations are without obligation. Product descriptions, in particular any and all technical specifications, are only binding when explicitly agreed upon.

Micro-Vickers Hardness Testing Machines HM-210/220

Single indenter configuration for HM-200 Series

A-Type*

B-Type*

C-Type*

D-Type*

*Please order AVPAK-20 Software **11AAE270-DEE** and the PC additionally!

All items listed below the set code number are included in the scope of delivery.

A-Type set

No.	Code No.:	Description	Content of Set
HM-210 A-Type set	810-401-13-ASET1	Single indenter configuration	**810-401-13** - Manual main unit HM-210 **2ALP300**- 10x Objective lens **2ALP500** - 50x Objective lens **810-420** - Manual XY stage 25x25mm
HM-220 A-Type set	810-406-13-ASET1	Single indenter configuration	**810-406-13** - Manual main unit HM-210 **2ALP300**- 10x Objective lens **2ALP500** - 50x Objective lens, Standard lens **11AAE669** - 100x Objective lens **810-420** - Manual XY stage 25x25mm

B-Type set

No.	Code No.:	Description	Content of Set
HM-210 B-Type set	810-404-11-BSET1	Single indenter configuration	**810-404-11** - System main unit HM-210 **2ALP300**- 10x Objective lens **2ALP500** - 50x Objective lens **810-420** - Manual XY stage 25x25mm
HM-220 B-Type set	810-409-11-BSET1	Single indenter configuration	**810-409-11** - System main unit HM-220 **2ALP300**- 10x Objective lens **2ALP500** - 50x Objective lens **11AAE669** - 100x Objective lens **810-420** - Manual XY stage 25x25mm

C-Type set

No.	Code No.:	Description	Content of Set
HM-210 C-Type set	810-404-11-CSET1	Single indenter configuration	**810-404-11** - Systemmain unit HM-210 **11AAE665** - 2x Objective lens **2ALP300**- 10x Objective lens **2ALP500** - 50x Objective lens **810-462-10** - Motorized XY stage 100x100mm
HM-220 C-Type set	810-409-13-CSET1	Single indenter configuration	**810-409-11** - System main unit HM-220 **11AAE665** - 2x Objective lens **2ALP300**- 10x Objective lens **2ALP500** - 50x Objective lens **11AAE669** - 100x Objective lens **810-462-10** - Motorized XY stage 100x100mm

D-Type set

No.	Code No.:	Description	Content of Set
HM-210 D-Type set	810-404-11-DSET1	Single indenter configuration	**810-404-11** - System main unit HM-210 **11AAE665** - 2x Objective lens **2ALP300**- 10x Objective lens **2ALP500** - 50x Objective lens **810-462-10** - Motorized XY stage 100x100mm **810-465** - Auto Focus unit
HM-220 D-Type set	810-409-13-DSET1	Single indenter configuration	**810-409-11** - System main unit HM-220 **11AAE665** - 2x Objective lens **2ALP300**- 10x Objective lens **2ALP500** - 50x Objective lens **11AAE669** - 100x Objective lens **810-462-10** - Motorized XY stage 100x100mm **810-465** - Auto Focus unit

All products to be sold to commercial customers.
Product illustrations are without obligation. Product descriptions, in particular any and all technical specifications, are only binding when explicitly agreed upon.

Mitutoyo

Micro-Vickers Hardness Testing Machines HM-210/220

Double indenter configuration HM-200 Series

A-Type set

No.	Code No.:	Description	Content of Set
HM-210 A-Type set 2	810-401-13-ASET2	Double indenter configuration	**810-401-13** - Manual main unit HM-210 **11AAB997 -** Second indentershaft for Knoop test **2ALP300**- 10x Objective lens **2ALP500** - 50x Objective lens **810-420** - Manual XY stage 25x25mm
HM-220 A-Type set 2	810-406-13-ASET2	Double indenter configuration	**810-406-13** - Manual main unit HM-210 **11AAB998 -** Second indentershaft for Knoop test **2ALP300**- 10x Objective lens **2ALP500** - 50x Objective lens **11AAE669** - 100x Objective lens **810-420** - Manual XY stage 25x25mm

B-Type set

No.	Code No.:	Description	Content of Set
HM-210 B-Type set 2	810-404-11-BSET2	Double indenter configuration	**810-404-11** - System main unit HM-210 **11AAB997 -** Second indentershaft for Knoop test **2ALP300**- 10x Objective lens **2ALP500** - 50x Objective lens **810-420** - Manual XY stage 25x25mm
HM-220 B-Type set 2	810-409-11-BSET2	Double indenter configuration	**810-409-11** - System main unit HM-220 **11AAB998 -** Second indentershaft for Knoop test **2ALP300**- 10x Objective lens **2ALP500** - 50x Objective lens **11AAE669** - 100x Objective lens **810-420** - Manual XY stage 25x25mm

C-Type set

No.	Code No.:	Description	Content of Set
HM-210 C-Type set 2	810-404-11-CSET2	Double indenter configuration	**810-404-11** - System main unit HM-210 **11AAB997 -** Second indentershaft for Knoop test **11AAE665** - 2x Objective lens **2ALP300**- 10x Objective lens **2ALP500** - 50x Objective lens **810-462-10** - Motorized XY stage 100x100mm
HM-220 C-Type set 2	810-409D-CSET2	Double indenter configuration	**810-409-11** - System main unit HM-220 **11AAB998 -** Second indentershaft for Knoop test **11AAE665** - 2x Objective lens **2ALP300**- 10x Objective lens **2ALP500** - 50x Objective lens **11AAE669** - 100x Objective lens **810-462-10** - Motorized XY stage 100x100mm

D-Type set

No.	Code No.:	Description	Content of Set
HM-210 D-Type set 2	810-404-11-DSET2	Double indenter configuration	**810-404-11** - System main unit HM-210 **11AAB997 -** Second indentershaft for Knoop test **11AAE665** - 2x Objective lens **2ALP300**- 10x Objective lens **2ALP500** - 50x Objective lens **810-462-10** - Motorized XY stage 100x100mm **810-465** - Autofocus unit
HM-220 D-Type set 2	810-409-11-DSET2	Double indenter configuration	**810-409-11** - System main unit HM-220 **11AAB998 -** Second indentershaft for Knoop test **11AAE665** - 2x Objective lens **2ALP300**- 10x Objective lens **2ALP500** - 50x Objective lens **11AAE669** - 100x Objective lens **810-462-10** - Motorized XY stage 100x100mm **810-465** - Autofocus unit

A-Type*

B-Type*

C-Type*

D-Type*

*Please order AVPAK-20 Software **11AAE270-DEE** and the PC additionally!

All items listed below the set code number are included in the scope of delivery.

All products to be sold to commercial customers.
Product illustrations are without obligation. Product descriptions, in particular any and all technical specifications, are only binding when explicitly agreed upon.

Micro-Vickers Hardness Testing Machines HM-210/220

Configuration

Up to three additional objective lenses can be added

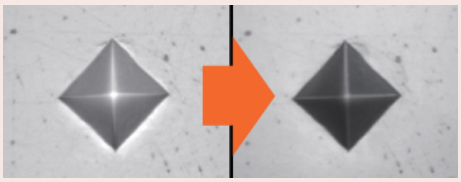

Observation image of the indentation (50X)
Stray light reduction around the indentation

Objectives	Vickers-Scale		
	HV 0,00005 - 0,02	HV 0,2 - 1	HV 1-2
2x	Use this objectives only for probe overview		
5x	Use this objectives only for probe overview		
10x			
20x			
50x			
100x			
10x objective for easy focus			
Use this table for first orientation			

Wide range of lenses available for different magnifications

		Minimum system configuration			In addition selectable FACTORY OPTIONS		Remarks
TOUCH SCREEN MODELS	SYSTEM A	HM-210 SYSTEM A	Main unit standard test force	810-401D	Video camera unit	810-454D	
			Manual XY stage 25 x 25mm	810-420	Objective lens 2X	11AAC104	
					Objective lens 5X	11AAC105	
		HM-210 SYSTEM A	Main unit standard test force	810-401D	Objective lens 10X	11AAC106	
			Manual XY stage 50 x 50mm	810-423	Objective lens 20X	11AAC107	
					Objective lens 100X	11AAC108	
					Indenter shaft unit	11AAC109	with 19BAA061 Knoop indenter
		HM-220 SYSTEM A	Main unit low test force	810-406D	Video camera unit	810-454D	
			Manual XY stage 25 x 25mm	810-420	Objective lens 2X	11AAC104	
					Objective lens 5X	11AAC105	
		HM-220 SYSTEM A	Main unit low test force	810-406D	Objective lens 10X	11AAC106	
			Manual XY stage 50 x 50mm	810-423	Objective lens 20X	11AAC107	
					Objective lens 100X	11AAC108	
					Indenter shaft unit	11AAC110	with 19BAA062 Knoop indenter

		Minimum system configuration			In addition selectable FACTORY OPTIONS		Remarks
SOFTWARE MODELS	SYSTEM B	HM-210 SYSTEM B	Main unit standard test force	810-404D	Objective lens 2X	11AAC104	
			Manual XY stage 25 x 25mm	810-420	Objective lens 5X	11AAC105	
			AVPAK-20*	11AAC666	Objective lens 10X	11AAC106	
					Objective lens 20X	11AAC107	
		HM-210 SYSTEM B	Main unit standard test force	810-404D	Objective lens 100X	11AAC108	
			Manual XY stage 50 x 50mm	810-423	Indenter shaft unit	11AAC109	with 19BAA061 Knoop indenter
			AVPAK-20*	11AAC666	Measuring microscope	11AAC129	
		HM-220 SYSTEM B	Main unit low test force	810-409D	Objective lens 2X	11AAC104	
			Manual XY stage 25 x 25mm	810-420	Objective lens 5X	11AAC105	
			AVPAK-20*	11AAC666	Objective lens 10X	11AAC106	
					Objective lens 20X	11AAC107	
		HM-220 SYSTEM B	Main unit low test force	810-409D	Objective lens 100X	11AAC108	
			Manual XY stage 50 x 50mm	810-423	Indenter shaft unit	11AAC110	with 19BAA062 Knoop indenter
			AVPAK-20*	11AAC666	Measuring microscope	11AAC129	

		Minimum system configuration			In addition selectable FACTORY OPTIONS		Remarks
SOFTWARE MODELS	SYSTEM C	HM-210 SYSTEM C	Main unit standard test force	810-404D	Objective lens 2X	11AAC104	
			Motorized XY stage 50 x 50mm	810-461D	Objective lens 5X	11AAC105	
			AVPAK-20*	11AAC666	Objective lens 10X	11AAC106	
					Objective lens 20X	11AAC107	
		HM-210 SYSTEM C	Main unit standard test force	810-404D	Objective lens 100X	11AAC108	
			Motorized XY stage 100 x 100mm	810-462D	Indenter shaft unit	11AAC109	with 19BAA061 Knoop indenter
			AVPAK-20*	11AAC666	Measuring microscope	11AAC129	
		HM-220 SYSTEM C	Main unit low test force	810-409D	Objective lens 2X	11AAC104	
			Motorized XY stage 50 x 50mm	810-461D	Objective lens 5X	11AAC105	
			AVPAK-20*	11AAC666	Objective lens 10X	11AAC106	
					Objective lens 20X	11AAC107	
		HM-220 SYSTEM C	Main unit low test force	810-409D	Objective lens 100X	11AAC108	
			Motorized XY stage 100 x 100mm	810-462D	Indenter shaft unit	11AAC110	with 19BAA062 Knoop indenter
			AVPAK-20*	11AAC666	Measuring microscope	11AAC129	

		Minimum system configuration			In addition selectable FACTORY OPTIONS		Remarks
SOFTWARE MODELS	SYSTEM D	HM-210 SYSTEM D	Main unit standard test force	810-404D	Objective lens 2X	11AAC104	
			Motorized XY stage 50 x 50mm	810-461D	Objective lens 5X	11AAC105	
			Auto Focus stage unit	810-465	Objective lens 10X	11AAC106	
			AVPAK-20*	11AAC666	Objective lens 20X	11AAC107	
					Objective lens 100X	11AAC108	
		HM-210 SYSTEM D	Main unit standard test force	810-404D	Indenter shaft unit	11AAC109	with 19BAA061 Knoop indenter
			Motorized XY stage 100 x 100mm	810-462D	Measuring microscope	11AAC129	
			Auto Focus stage unit	810-465			
			AVPAK-20*	11AAC666			
		HM-220 SYSTEM D	Main unit low test force	810-409D	Objective lens 2X	11AAC104	
			Motorized XY stage 50 x 50mm	810-461D	Objective lens 5X	11AAC105	
			Auto Focus stage unit	810-465	Objective lens 10X	11AAC106	
			AVPAK-20*	11AAC666	Objective lens 20X	11AAC107	
					Objective lens 100X	11AAC108	
		HM-220 SYSTEM D	Main unit low test force	810-409D	Indenter shaft unit	11AAC110	with 19BAA062 Knoop indenter
			Motorized XY stage 100 x 100mm	810-462D	Measuring microscope	11AAC129	
			Auto Focus stage unit	810-465			
			AVPAK-20*	11AAC666			

* The above set does not include PC.

For all systems: 50 x objective as standard.

All products to be sold to commercial customers.
Product illustrations are without obligation. Product descriptions, in particular any and all technical specifications, are only binding when explicitly agreed upon.

Mitutoyo

Vickers Hardness Testing Machine HV-110/120

Series 810

The manual line up of the HV-100 Series has the following benefits:

- 144 mm (5,7 inch) colored touchsreen display (Type A) with higher visibility, easy to operate user interface
- Digimatic output for report creation.
- USB stick data export
- Electronic test force change.
- Max. specimen height up to 210mm
- LED illumination for best image.
- High number of accessories
- Vickers, Knoop, Brinell and KC fracture toughness measurement.
- Supports Brinelltest up to 62,5KG with an optional test force weight.

Manual type A

Software type D

HV-110 Testing force range

No.	Test force								
HV-110	V.S.*	HV1	HV2	HV3	HV5	HV10	HV20	HV30	HV50
	N	9,807	19,61	29,42	49,03	98,07	196,1	294,2	490,3
	(kgf)	1	2	3	5	10	20	30	50

*V.S. = Vickers Scale

HV-120 Testing force range

No.	Test force								
HV-120	V.S.*	HV0,3	HV0,5	HV1	HV2,5	HV5	HV10	HV20	HV30
	N	2,942	4,903	9,807	24,51	49,03	98,07	196,1	294,2
	(kgf)	0,3	0,5	1	2,5	5	10	20	30

*V.S. = Vickers Scale

Hardness Testing Machines brochure on request

Scan QR Code with your mobile device and watch our product videos on YouTube

Specifications

External dimensions [mm]	System A: 307(W)×696(D) ×786(H)mm System B/C/D: 307(W)×627(D) ×875(H)mm
Objective lens	Up to 3 pcs. mountable (one standard lens 10X mounted as standard)
Force dwell time	5-999 sec (selectable)
Load control	Automatic (load, dwell, unload)
Optical system	Infinity corrected optical system
Illumination unit	LED light
Standard	JIS B 7725, ISO 6507-2
Data output	RS-232C, Digimatic, USB 2. 0 interface
Working distance	50X = 2,5 mm (other objectives available)
Indenter approach speed	60 µm/s, 150 µm/s selectable
Mass	43.0 kg
Control panel	Built-in touch panel, 5,7" Color LCD (HM-110A/ 120A for System A), Control software (PC for System B/C/D)
Functions	Calculation of Vickers / Knoop*2 / Brinell*3 hardness, and ceramic fracture toughness based on IF method (JIS R1697), 3 display format (standard, list, simple), GO/NG judgment, test condition guide, curve and user correction, hardness corresponding value, statistics calculation
Main unit mass	HV-110: Approx. 60kg, HV-120: Approx. 58kg
Output	Digimatic, serial, USB2 series A (for memory)*1, USB2 B Type (for system communication)
Resolution of diagonal length of an indentation	Objective lens less than 50X: 0,1µm (Objective lens more than 50X: 0,01µm)
Specimen dimensions	System A: height 210mm, depth 170mm (when using flat anvil) System B: height 181mm, depth 170mm (when using manual XY stage 50X50mm) System C: height 172mm, depth 170mm, System D: height 132mm, depth 170mm
Test force control	Lever method and automatic control (load, duration, unload)
Turret drive	Motor driven and manual operation

All products to be sold to commercial customers.
Product illustrations are without obligation. Product descriptions, in particular any and all technical specifications, are only binding when explicitly agreed upon.

Vickers Hardness Testing Machine HV-110/120

Manual or complete automatic testing

Optional accessories

No.	Description
63ETB775	750HV1 Vickers Hardness Reference Material, with ISO 6507-3 DAkkS calibration certificate, 60x60x16mm, steel
63ETB749	500HV10 Vickers Hardness Reference Material, with ISO 6507-3 DAkkS calibration certificate, 60x60x16mm, steel
63ETB754	750HV10 Vickers Hardness Reference Material, with ISO 6507-3 DAkkS calibration certificate, 60x60x16mm, steel
63ETB875	500HV20 Vickers Hardness Reference Material, with ISO 6507-3 DAkkS calibration certificate, 60x60x16mm, steel
63ETB880	750HV20 Vickers Hardness Reference Material, with ISO 6507-3 DAkkS calibration certificate, 60x60x16mm, steel
63ETB897	500HV30 Vickers Hardness Reference Material, with ISO 6507-3 DAkkS calibration certificate, 60x60x16mm, steel
63ETB902	750HV30 Vickers Hardness Reference Material, with ISO 6507-3 DAkkS calibration certificate, 60x60x16mm, steel
810-038	Round table, Ø250 mm
810-040	V-anvil, groove length 40 mm, Ø15 mm-Ø60 mm
810-041	V-anvil, groove length 40 mm, Ø3 mm-Ø9 mm
810-423	Manual XY stage w. digital micrometers, 50x50mm HM-200 and HV-100 Series
11AAC702	Vickers hardness testing machines, Steel stand for HV-100 Series machine
11AAC719	Vickers hardness testing machines, Vibration isolator stand HV-100 Series
810-644	Adittional rack for 11AAC719

System A

HV-110A/HV-120A

Features:

- 144 mm (5.7 inch) color LCD display
- 3 types of display styles settable
- Equipped measuring microscope allows diagonal length measurement by visual observation
- Positioning using a manual XY stage

System B

HV-110B/HV-120B

Features:

- Operation using highly functional AVPAK-20 software
- Light intensity of LED illumination adjusted with aperture or AVPAK-20
- Positioning using a manual XY stage

System C

HV-110C/HV-120C

Features:

- Operation using highly functional AVPAK-20 software
- Light intensity of the LED illumination adjusted with aperture
  diaphragm or through AVPAK-20
- Automatic indentation reading
- Automatic positioning using motorized XY stage

System D

HV-110D/HV-120D

Features:

- Operation using highly functional AVPAK-20 software
- Light intensity of the LED illumination adjusted with aperture diaphragm or through AVPAK-20
- Automatic positioning with motorized XY stage
- Auto focussing

Vickers HDMI camera system

Code number	Description
63AAA602	HDMI camera
11AAC729	C-mount
NEC EA241WM	24" monitor

All products to be sold to commercial customers.
Product illustrations are without obligation. Product descriptions, in particular any and all technical specifications, are only binding when explicitly agreed upon.

Mitutoyo

Vickers Hardness Testing Machine HV-110/120

Configuration

Two additional objective lenses can be selected

		Minimum system configuration			In addition selectable FACTORY OPTIONS		Remarks
TOUCH SCREEN MODELS	SYSTEM A	HV-110 SYSTEM A	Main unit standard test force	810-440D	Video camera unit	810-454D	
			Manual XY stage 50 x 50mm	810-423	Objective lens 2X	11AAC712	
					Objective lens 5X	11AAC713	
					Objective lens 20X	11AAC714	
					Objective lens 50X	11AAC715	
		HV-120 SYSTEM A	Main unit low test force	810-445D	Video camera unit	810-454D	
			Manual XY stage 50X50 mm	810-423	Objective lens 2X	11AAC712	
					Objective lens 5X	11AAC713	
					Objective lens 20X	11AAC714	
					Objective lens 50X	11AAC715	

		Minimum system configuration			In addition selectable FACTORY OPTIONS		Remarks
SOFTWARE MODELS	SYSTEM B	HV-110 SYSTEM B	Main unit standard test force	810-443D	Measuring microscope	11AAC718	Cannot be used simultaneously with the vision unit
			Manual XY stage 50 x 50mm	810-423	Objective lens 2X	11AAC712	
			AVPAK-20*	11AAC666	Objective lens 5X	11AAC713	
					Objective lens 20X	11AAC714	
					Objective lens 50X	11AAC715	
		HV-120 SYSTEM B	Main unit low test force	810-448D	Measuring microscope	11AAC718	Cannot be used simultaneously with the vision unit
			Manual XY stage 50 x 50mm	810-423	Objective lens 2X	11AAC712	
			AVPAK-20*	11AAC666	Objective lens 5X	11AAC713	
					Objective lens 20X	11AAC714	
					Objective lens 50X	11AAC715	

		Minimum system configuration			In addition selectable FACTORY OPTIONS		Remarks
SOFTWARE MODELS	SYSTEM C	HV-110 SYSTEM C	Main unit standard test force	810-443D	Measuring microscope	11AAC718	Cannot be used simultaneously with the vision unit
			Motorized XY stage 50 x 50mm	810-451	Objective lens 2X	11AAC712	
			AVPAK-20*	11AAC666	Objective lens 5X	11AAC713	
					Objective lens 20X	11AAC714	
					Objective lens 50X	11AAC715	
		HV-110 SYSTEM C	Main unit standard test force	810-433D			
			Motorized XY stage 100 x 100mm	810-452D			
			AVPAK-20*	11AAC666			
		HV-120 SYSTEM C	Main unit low test force	810-448D	Measuring microscope	11AAC718	Cannot be used simultaneously with the vision unit
			Motorized XY stage 50 x 50mm	810-451D	Objective lens 2X	11AAC712	
			AVPAK-20*	11AAC666	Objective lens 5X	11AAC713	
					Objective lens 20X	11AAC714	
					Objective lens 50X	11AAC715	
		HV-120 SYSTEM C	Main unit standard test force	810-433D			
			Motorized XY stage 100 x 100mm	810-452D			
			AVPAK-20*	11AAC666			

		Minimum system configuration			In addition selectable FACTORY OPTIONS		Remarks
SOFTWARE MODELS	SYSTEM D	HV-110 SYSTEM D	Main unit standard test force	810-443D	Video camera unit	810-454D	
			Motorized XY stage 50 x 50mm	810-451D	Objective lens 2X	11AAC712	
			Auto Focus stage unit	810-465	Objective lens 5X	11AAC713	
			AVPAK-20*	11AAC666	Objective lens 20X	11AAC714	
					Objective lens 50X	11AAC715	
					Objective lens 100X	11AAC716	
		HV-110 SYSTEM D	Main unit standard test force	810-443D	Measuring microscope	11AAC718	Cannot be used simultaneously with the vision unit
			Motorized XY stage 100 x 100mm	810-452D			
			Auto Focus stage unit	810-465			
			AVPAK-20*	11AAC666			
		HV-120 SYSTEM D	Main unit low test force	810-448D	Video camera unit	810-454D	
			Motorized XY stage 50 x 50mm	810-451D	Objective lens 2X	11AAC712	
			Auto Focus stage unit	810-465	Objective lens 5X	11AAC713	
			AVPAK-20*	11AAC666	Objective lens 20X	11AAC714	
					Objective lens 50X	11AAC715	
					Objective lens 100X	11AAC716	
		HV-120 SYSTEM D	Main unit low test force	810-448D	Measuring microscope	11AAC718	Cannot be used simultaneously with the vision unit
			Motorized XY stage 100 x 100mm	810-452D			
			Auto Focus stage unit	810-465			
			AVPAK-20*	11AAC666			

* The above set does not include PC.

For all systems: 10 x objective as standard.

All products to be sold to commercial customers.
Product illustrations are without obligation. Product descriptions, in particular any and all technical specifications, are only binding when explicitly agreed upon.

Micro-Vickers and Vickers Set

Configuration

A-Type

B-Type

C-Type

D-Type

Please order AVPAK-20 Software **11AAE270-DEE** and the PC additionally!

All items listed below the set code number are included in the scope of delivery.

A-Type set

No.	Code No.:	Description	Content of Set
HV-110 A-Type Set	810-440-13-ASET	Single indenter configuration	**810-440-13** - Manual main unit HV-110 **02ALP300** - 10x Objective lens **11AAE674** - 20x Objective lens
HV-120 A-Type Set	810-445-13-ASET	Single indenter configuration	**810-445-13** - Manual main unit HV-120 **02ALP300** - 10x Objective lens **11AAE674** - 20x Objective lens

B-Type set

No.	Code No.:	Description	Content of Set
HV-110 B-Type Set	810-443-11-BSET	Single indenter configuration	**810-443-11** - System main unit HV-110 **02ALP300** - 10x Objective lens **11AAE674** - 20x Objective lens
HV-120 B-Type Set	810-448-11-BSET	Single indenter configuration	**810-448-11** - System main unit HV-120 **02ALP300** - 10x Objective lens **11AAE674** - 20x Objective lens

C-Type set

No.	Code No.:	Description	Content of Set
HV-110 C-Type Set	810-443-11-CSET	Single indenter configuration	**810-443-11** - System main unit HV-110 **11AAE672** - 2x Objective lens **02ALP300** - 10x Objective lens **11AAE674** - 20x Objective lens **810-462-10** - Motorized XY stage 100x100mm
HV-120 C-Type Set	810-448-11-CSET	Single indenter configuration	**810-448-11** - System main unit HV-120 **11AAE672** - 2x Objective lens **02ALP300** - 10x Objective lens **11AAE674** - 20x Objective lens **810-462-10** - Motorized XY stage 100x100mm

D-Type set

No.	Code No.:	Description	Content of Set
HV-110 D-Type Set	810-443-11-DSET	Single indenter configuration	**810-443-11** - System main unit HV-110 **11AAE672** - 2x Objective lens **02ALP300** - 10x Objective lens **11AAE674** - 20x Objective lens **810-462-10** - Motorized XY stage 100x100mm **810-465** - Autofocus unit
HV-120 D-Type Set	810-448-11-DSET	Single indenter configuration	**810-448-11** - System main unit HV-120 **11AAE672** - 2x Objective lens **02ALP300** - 10x Objective lens **11AAE674** - 20x Objective lens **810-462-10** - Motorized XY stage 100x100mm **810-465** - Autofocus unit

All products to be sold to commercial customers.
Product illustrations are without obligation. Product descriptions, in particular any and all technical specifications, are only binding when explicitly agreed upon.

Mitutoyo

Vickers optional accessories

Optional accessories for Vickers hardness testing machines

Software and data output									
Code number	**Description**	**HM-200A**	**HM-200B**	**HM-200C**	**HM-200D**	**HV-100A**	**HV-100B**	**HV-100C**	**HV-100D**
11AAE270-DEE	AVPAK V3.1 hardness Testing Software		●	●	●		●	●	●
12AAU423	Form Eio V4 Automation Software (AVPAK required)		●	●	●		●	●	●
264-505	DP-1VA Data logger	●				●			
936937	Digimatic cable 1m	●				●			
937387	Digimatic cable 1m	●				●			
02AZD810D	U-WAVE-R	●				●			
02AZD730G	U-WAVE-T	●				●			
02AZD880G	U-WAVE-T Buzzer type	●				●			
02AZD790D	U-WAVE-T connection cable	●				●			
264-016-10	IT-016U Digimatic Input Tool	●				●			
64AAB607R	MeasurLink Real-Time Professional	●	●	●	●	●	●	●	●
64AAB608R	MeasurLink Real-Time Professional 3D	●	●	●	●	●	●	●	●

Accessories									
Code number	**Description**	**HM-200A**	**HM-200B**	**HM-200C**	**HM-200D**	**HV-100A**	**HV-100B**	**HV-100C**	**HV-100D**
810-013	Thin plate material holder	●	●			●	●		
810-014-1	Wire specimen holder horizontal	●	●			●	●		
810-015-1	Wire specimen holder vertical	●	●			●	●		
810-018	Rotary table for specimen holder 360°	●	●	●	●	●	●	●	●
810-019	Adjustable tilting vise	●	●	●	●	●	●	●	●
810-020	Adjust. specimen holder Ø15,0-30,0 mm	●	●			●	●		
810-650-1	Specimen holder, Ø25.4 mm	●	●	●	●	●	●	●	●
810-650-2	Specimen holder, Ø30,0 mm	●	●	●	●	●	●	●	●
810-650-3	Specimen holder, Ø31,75 mm	●	●	●	●	●	●	●	●
810-650-4	Specimen holder, Ø38,1 mm	●	●	●	●	●	●	●	●
810-650-5	Specimen holder, Ø40,0 mm	●	●	●	●	●	●	●	●
11BAF894	Top board for 810-650-1 25,4 mm	●	●	●	●	●	●	●	●
11BAF895	Top board for 810-650-2 30,0 mm	●	●	●	●	●	●	●	●
11BAF896	Top board for 810-650-3 31,75 mm	●	●	●	●	●	●	●	●
11BAF897	Top board for 810-650-4 38,1 mm	●	●	●	●	●	●	●	●
11BAF898	Top board for 810-650-5 40,0 mm	●	●	●	●	●	●	●	●
810-085	Sheet material specimen holder	●	●	●	●	●	●	●	●
810-095	Rotary tilting vise Ø15-50mm	●	●	●	●	●	●	●	●
810-016	Standard vise 51,0 mm opening	●	●	●	●	●	●	●	●
810-017	Standard vise 100,0 mm opening					●	●		
810-037	Round table ø180,0 mm					●	●		
810-038	Round table ø250,0 mm					●	●		
810-039	Anvil, round ø64,0 mm	●	●			●	●		
810-027	Adjustable support for long workpieces					●	●		
810-028	Height adjustable jack rest	●	●			●	●		
810-029	V-anvil Ø50,0 mm- Ø100,0 mm L 400,0 mm					●	●		
810-040	V-anvil Ø15,0 mm- Ø60,0 mm L40,0 mm	●	●						
810-041	V-anvil Ø3,0 mm- Ø9,0 mm L40,0 mm	●	●						
810-042	V-anvil, stepped Ø4,0 mm- Ø16,0 mm	●	●						
11AAD537	Foot switch					●	●		

All products to be sold to commercial customers.
Product illustrations are without obligation. Product descriptions, in particular any and all technical specifications, are only binding when explicitly agreed upon.

Vickers optional accessories

XY-Stages/ Autofocus unit									
Code number	**Description**	**HM-200A**	**HM-200B**	**HM-200C**	**HM-200D**	**HV-100A**	**HV-100B**	**HV-100C**	**HV-100D**
810-700	Jominy stage, manual with digital positioning indication					●	●		
810-420	Manual XY stage 25,0 x 25,0 mm w. digital micrometers	●	●						
810-423	Manual XY stage 50,0 x 50,0 mm w. digital micrometers	●	●			●	●		
810-461D	Motorized XY stage 50x50mm			●	●			●	●
810-462D	Motorized XY stage 100x100mm			●	●			●	●
810-465	Auto focus unit			●	●			●	●

Objective lenses MH Plan	**unit**		**2x**	**5x**	**10x**	**20x**	**50x**	100x
Order number HV-100 Series			11AAC712	11AAC713	02ALP300 standard lens)	11AAC714	11AAC715	11AAC716
Order number HM-200 Series			11AAC104	11AAC105	11AAC106	11AAC107	02ALP500 (standard lens)	11AAC108
Manual systems								
Total field of view	mm		7,00	2,80	1,40	0,70	0,28	0,14
Measurement range	mm		Ø 3.5	Ø1.4	Ø0.7	Ø0.35	Ø0.14	Ø0.07
Usable field of view	mm	25%	1,750	0,700	0,350	0,175	0,070	0,035
	mm	75%	5,250	2,100	1,050	0,525	0,210	0,105
Magnification with 10x ocular			20x	50x	100x	200x	500x	1000x
TV monitor systems								
Measurement range	mm	Horizontal	4,1mm	1,60mm	0,81mm	0,41mm	0,16mm	0,080mm
		Vertical	2,3mm	0,99mm	0,44mm	0,23mm	0,088mm	0,045mm
AVPAK Systems								
Measurement range	mm	Horizontal	2,95mm	1,18mm	0,59mm	0,30mm	0,118mm	0,059mm
		Vertical	2,21mm	0,89mm	0,44mm	0,22mm	0,089mm	0,044mm
General specification								
Working distance	mm		6,00mm	27mm	11.8mm	5.2mm	2.5mm	1.5mm
Numeric aperture NA			0.056	0,11	0,28	0,42	0,50	0,70
Resolution	µm		4,9107	2,5000	0,9820	0,6550	0,5500	0,3930
Depth of focus	µm		87,70	22,70	3,50	1,56	1,10	0,60

All products to be sold to commercial customers.
Product illustrations are without obligation. Product descriptions, in particular any and all technical specifications, are only binding when explicitly agreed upon.

Mitutoyo

Hardness Testing Software

Software AVPAK-20 for System B,C and D No. 11AAE270-DEE

Software to control test sequence, evaluate hardness and make report
Supports Windows® 10, 64 bit operating system
.

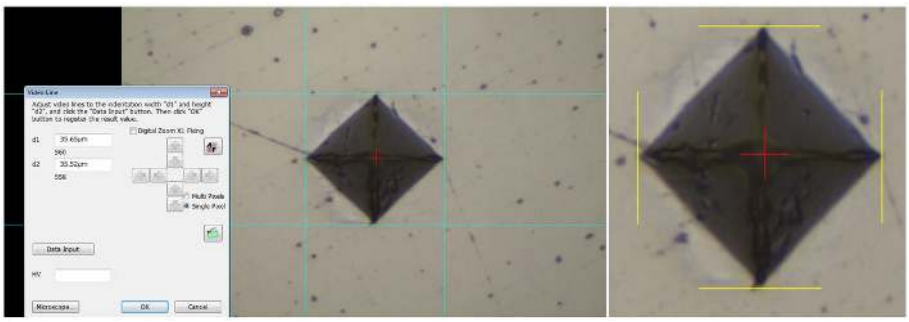

Automatic and manual video line measurement of indentation diagonals

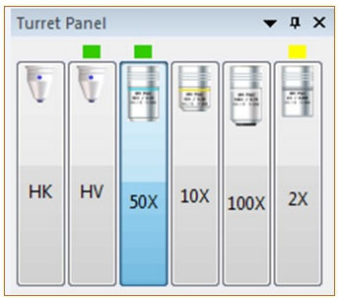

Turret control function with color indicator

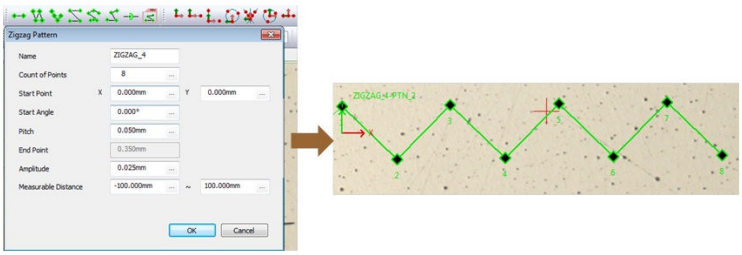

Test pattern function
Operator friendly presets of test patterns (line, zigzag, grid or circle/ arc) with adjustable indentation spacings. Additionally patterns can be combined or test points can be set freely as a teach in pattern.

Coordinate alignment function
Several test pattern alignment methods (1-point, 2-points, 3-points, arc, and centre of circle, bisector, midpoint) are available to place the pattern in the correct position. The automatic contour recognition allows to place indentations in accordance with the obtained contour or a specified excerpt from the contour. Therefore lines, patterns or a matrix of indentations can be placed accordingly.

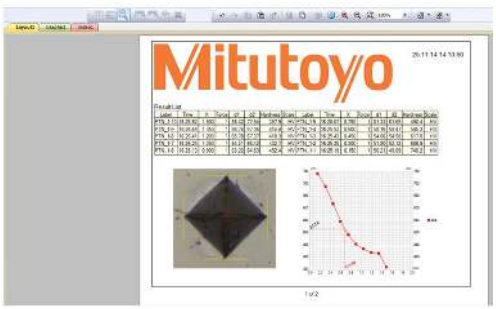

Analysis and report function
Provides to display several types of graph (carburise transition, carburize distribution, X-R control chart) and layouts. It is possible to edit these graphs on the report. Tracebility comments, indentation images and tables of test data can be inserted as well.

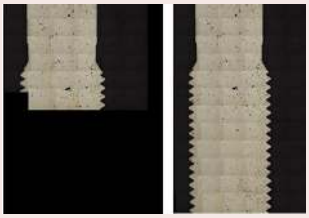

Overview image generation

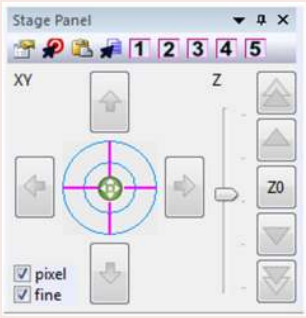

Stage control function

Functions

Stitching
Generates specimen overview images by stitching several images together. Indentation patterns can be placed on the overview image precisely and easily. (motorized XY stage is required)

Automatic indentation measurement
Automatically measure the indentation's diagonal lengths according EN ISO 6507-1

Illumination control
Set the illumination level manually or automatically according to the specimen surface. Additionally display the saturation on the camera image

Stage control function
Control the motorized XY stage unit (for C- and D-Types) and the autofocus stage unit (type D) by the virtual joystick on the AVPAK-20 window. (Hardware joystick box is always included in the motorized XY stage's scope of delivery) Insert XY positioning steps in your part program and store 5 settable postions.

Turret control function
Choose and change the Objective lens on the turret panel. Green colour marks indicate the indenter and objective lenses that are set for measurement in the software. The objective lens set for overview image stitching is marked in yellow.

Automatic execution function
Record any kind of operation, store and rerun as part programs.

All products to be sold to commercial customers.
Product illustrations are without obligation. Product descriptions, in particular any and all technical specifications, are only binding when explicitly agreed upon.

Hardness Testing Software

Software AVPAK-20 for System B, C and D

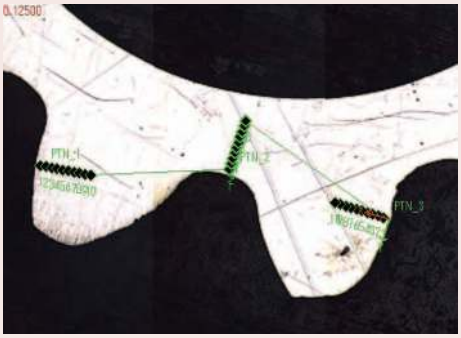

Graphic view (of stored images)
For displaying the specimen overview images and checking the pattern positioning The digital zoom function can be used to easily magnify and check the indentation site.

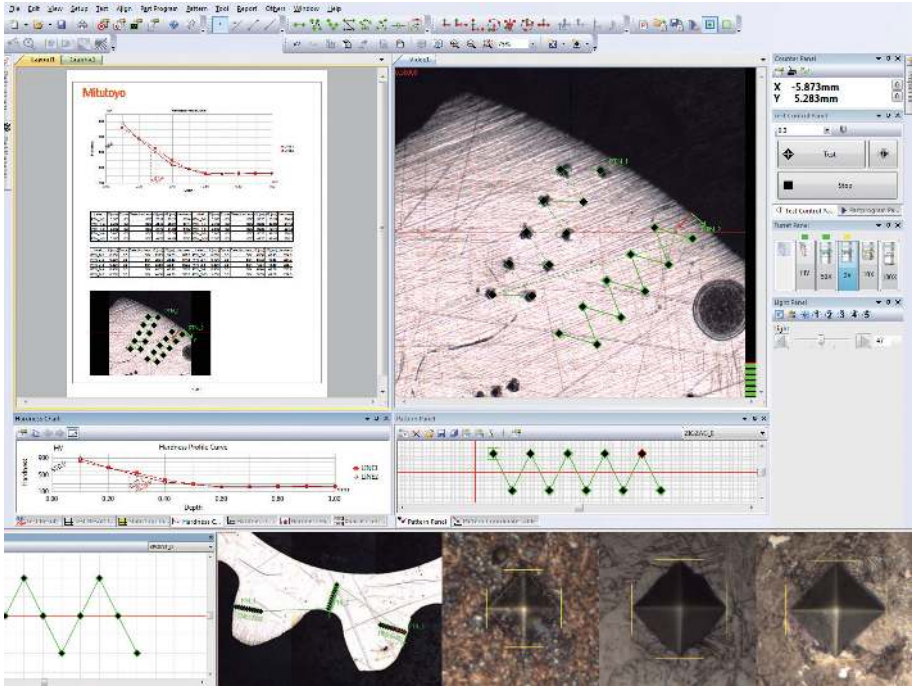

Screen layout for control, testing status, result display and reporting can be changed freely.

FUNCTIONS

Layout view
Indentation images, graphs, tables, etc., can be laid out freely to create the report in need.

Stitching
Takes images of an entire rectangular field from the moving stage then combines the images. Use stitching for a complete overview of sample.

Auto trace
Automatically traces the shape of the sample. Take images as the stage moves along the outer contours of the specimen, then combines the images.

Navigation function for the manual XY stage
(System B)
When the test position is to be moved during multi-point testing (CHD etc.), this function guides the positioning of the manual XY fine adjustment stage to the next position by pop up on screen menu. User positioning errors are reduced drastically

Handling of multiple specimens
Part program and Part Manager function support testing of multiple and irregular specimens.

Multi-specimen testing
Executes different part programs for each irregular specimen.

Parts Manager:
Executes a common part program for specimens having the same shape. parts can be arranged in grid positions.

Pattern creation:
This tool supports the creation of test patterns such as straight lines, zigzag lines and teaching patterns.

Pattern pasting :
This tool supports the pasting of created test patterns by applying a coordinate system. It adjusts the origin, direction, etc. of the before created pattern. Works coordinate systems for complex applications can be generated.

All products to be sold to commercial customers.
Product illustrations are without obligation. Product descriptions, in particular any and all technical specifications, are only binding when explicitly agreed upon.

Mitutoyo

Hardness Testing Software

Type	B	C	D	B	C	D	A	B
No.	**HM-210B HM-220B**	**HM-210C HM-220C**	**HM-210D HM-220D**	**HV-110B HV-120B**	**HV-110C HV-120C**	**HV-110D HV-120D**	**HR-610A HR-620A**	**HR-620B**
Indentation control function	●	●	●	●	●	●	●	●
Auto reading function	●	●	●	●	●	●	-	-
Focusing function (Contrast level indicator)	●	●	●	●	●	●	-	-
Focusing function (Auto Focus)	●	-	●	-	-	●	-	-
Illumination control function	●	●	●	●	●	●	-	-
Stage control function	●	●	●	-	●	●	-	●
Turret control function	●	●	●	●	●	●	-	-
Test pattern function	●	●	●	●	●	●	-	●
Coordinate alignment function	●	●	●	●	●	●	-	●
Wide area image synthesis function	-	●	●	-	●	●	-	-
Automatic execution function	●	●	●	●	●	●	●	●
Multiple specimens testing function	●	●	●	-	●	●	-	●
Wizard function for single test/pattern test/standard test	●	●	●	●	●	●	●	●
Image analysis function	●	●	●	●	●	●	-	-
Report creation	●	●	●	●	●	●	-	●
Hardness scale conversion, spherical compensation, judgment, statistical factor	●	●	●	●	●	●	●	●
Extemal output function	●	●	●	●	●	●	●	●
Security level function	●	●	●	●	●	●	●	●
Simple dimension function	●	●	●	●	●	●	-	-
Edging surface reading function	●	●	●	●	●	●	-	-
Jominy test function	●	●	●	●	●	●	-	●
User layout save function for software window	●	●	●	●	●	●	●	●
FORMEio compatibility for automation	●	●	●	●	●	●	●	●
Status Monitor compatibility	●	●	●	●	●	●	●	●
Inch system (mm/inch main unit required)	●	●	●	●	●	●	●	●
Retrofittable to C-type	●	-	-	●	-	-	-	-
Retrofittable to D- type	●	●	-	●	●	-	-	-

All products to be sold to commercial customers.
Product illustrations are without obligation. Product descriptions, in particular any and all technical specifications, are only binding when explicitly agreed upon.

Rockwell HR-200/300/400

Series 963

These are four economical Rockwell hardness testing machines to suit practically every application you need.
The Rockwell HR-200/300/400 offers you the following benefits:

- The newly designed frame provides maximum clearance for positioning the work piece, all you need is a flat table for mounting these testing machines.
- They are very simple to operate: the analogue type HR-210 uses an automatic presetting dial gauge.
- Digital models HR-430MR/MS use automatic steering wheel braking and load sequencing for easy handling.
- Digital models HR-320MS and HR-430MR/MS can use our Digimatic Mini-processor (DP-1VR) for printing results, and you can use an input tool (USB-ITN-E) to connect to a PC for data transfer, analysis and storage.
- You can perform Brinell hardness tests by using the following optional accessories: a Brinell indenter, a weight set and a measurement microscope.

Specifications

Height	Max. 180 mm (100 if cover is attached) mm
Measuring depth	Max. 165 mm (from the center of the endenter axis)
Functions	HR-320MS, HR-430MR, HR-430MS : GO/NG, Compensation fubction, Hardness conversion

K543817
Workpiece clamping device for:
HR-210MR
HR-430MR

HR-300-400 digital display

HR-400 Automatic preliminary test force brake

SPC Digimatic and RS-232C interface

Scan QR Code with your mobile device and watch our product videos on YouTube

HR-210MR
Rockwell hardness testing machine

Manual weight changing (with total test force selected) and handling of preload force. Motor drive controls loading sequence.

HR-210MR dial gauge

HR-320MS

Dual type (Rockwell / Rockwell Superficial) hardness testing machine:

Manually handles test force and preload force selection. Motor drive controls loading sequence.

HR-430MR

Rockwell hardness testing machine:

Economy type, but supports dial switching, power steering and support of all test standards and is equipped with automatic brake handle auto start feature. Motor drive controls loading sequence.

HR-430MS

Dual type (Rockwell / Rockwell Superficial) hardness testing machine:

Economy type, but supports dial switching, power steering and support of all test standards and is equipped with automatic brake handle auto start feature. Motor drive controls loading sequence.

All products to be sold to commercial customers.
Product illustrations are without obligation. Product descriptions, in particular any and all technical specifications, are only binding when explicitly agreed upon.

Mitutoyo

Rockwell HR-200/300/400

Model	HR-210MR	HR-320MS	HR-430MR	HR-430MS
No.	**810-191-11**	**810-192-21**	**810-193-21**	**810-194-21**
Rockwell (EN ISO 6508, ASTM E-18, JIS B7726)	ISO 6508	■	■	■
Brinell, Indentation only (non standard due to application of preliminary load)	Optional	Optional	■	Optional
Analog type	■	-	-	-
Digital type LCD matrix with backlight	-	■	■	■
HR unit resolution	0,5 HR	0,1 HR	0,1 HR	0,1 HR
Test force range 60-150KG, 588- 1471N Rockwell	■	-	■	-
Test force range 62,5-187,5KG, 612,9-1839N Brinell**	Optional	-	Optional	-
Test force range 3-150KG, 29,42- 1471N Rockwell, Rockwell Superficial	-	■	-	■
Test force range 30-187,5KG, 29,42- 1839N Brinell**	-	Optional	-	Optional
Test force switching	Manual	Manual	By dial	By dial
Test force duration	Fixed 3-5.5s or manual	1-99s setting or manual operation	1-99s setting or manual operation	1-99s setting or manual operation
Preliminary test force 10kg/98,07N	-	-	■	-
Preliminary test force 3kg and 10kg/29,42 N and 98,07N	-	■	-	■
Preliminary test force (handling support)	-	Loading navigator indication	Automatic elevation unit brake	Automatic elevation unit brake
Preliminary test force switching - by dial	-	-	■	■
Total test force load operation Manual/lever operation	-	Motor drive, Button start	Motor drive, Automatic start	Motor drive, Automatic start
LED workroom illumination	■	■	■	■
RS-232C, Digimatic interface	-	■	■	■
Compensation	-	■	■	■
Cylindrical compensation	-	■	■	■
Acoustic signal for end of test, error	-	■	■	■
Conversion	-	■	■	■
Limit indication	-	■	■	■
Jominy-test capability	Additional accessories required	Additional accessories required	Additional accessories required	Additional accessories required
Workpiece clamping device K543817 capability	■	-	■	-
Basic test surface Ø 64mm	■	■	■	■
Anvil adaption	Ø 19mm	Ø 19mm	Ø 19mm	Ø 19mm
Max. specimen height	180 mm	180 mm	180 mm	180 mm
Throat depth	165 mm	165 mm	165 mm	165 mm
Max. specimen weight	20 kg	20 kg	20 kg	20 kg
External dimensions 235(W) x 512(D) x 780(H)mm	■	■	■	■
Approx. mass main unit	47 kg	46,3 kg	49,3 kg	49,9 kg
Power supply 100-240V AC 1.2A (AC adapter DC12V 3.5A)	■	■	■	■

** requires optional Brinell weight set
*** can be enhanced with additional accesories
** requires optional Brinell weight set

All main units are supplied without power cord, indenters and hardness reference materials.
Please choose the required accessories separately.

Please choose for example:

63DIA023 diamond indenter ISO 6508 and ASTM E18
63ETB040DG 60HRC hardness reference material ISO 6508 and ASTM E18
02ZAA021 power cord

All products to be sold to commercial customers.
Product illustrations are without obligation. Product descriptions, in particular any and all technical specifications, are only binding when explicitly agreed upon.

Rockwell, Rockwell Superficial, Brinell Hardness Tester HR-530 and HR-600

Series 810

The HR-530 series offers five different hardness testing methods: Rockwell, Rockwell Superficial, Brinell, Brinell Depth Measurement and Plastic Testing in a single unit.

This makes it a versatile tool ready to tackle tasks in production, goods inwards inspection and quality control in general.

- A real time electronic test force control system is built into the compact body along with an electronic force gage. The test force control prevents the system from applying too much test force at the point of reaching total testforce.
- Real time force control provides accurate test force generation and stable time cycle sequences conform to ISO standards.
- The serial measurement mode enables fast execution of a high numbers of tests on identical workpieces.
- A magnet brake system stops the spindle movement immediately at sensing of workpiece contact. This enables the HR-530 to perform semi automatic test sequences, eliminating the user influence.
- The lever indenter arm design enables not only interior and exterior measurements but also an excellent specimen surface overview. The functionality is furthermore enhanced by an LED workroom illumination.
- The intelligent lever arm design allows testing at inside positions without cutting the specimen. The minimum diameter that can be entered by the lever arm with the standard size diamond indenter is 35 mm.
- The optional short type diamond indenter (Part No. 63DIA007) additionally enables inside testing from Ø22 mm.
- HR-530L long type with an optional max. specimen height of 395 mm.
- Indenters, test blocks and power cord are not included in the scope of delivery and have to be ordered separately.

Specifications

Functions	• Conversion function [HV, HK, HR (Rockwell hardness A, B, C, D, F, G / Rockwell Superficial 15T, 30T, 45T, 15N, 30N, 45N), HS, HB, tensile strength] • GO/NG judgment function Serial test function (for specimens of the same thickness) • Cylindrical correction, spherical correction, offset correction, multi-point correction functions • Statistical calculation function • Graph generation function (X-R control charts)
Preleminary test force	29,42; 98,07 N
Power supply	AC100V, 120V, 220V, 240V Auto-selection
Statistic function	Maximum value, minimum value, mean value, standard deviation, upper limit, lower limit, GO count, range, NG count
Test force setting	By software setting
Table lifting	Manual (automatic breaking and load sequencing)
Standard	ISO 6508; JIS 7726; ISO 6506, JIS 7726; ISO 2039-2, ASTM D785, JIS K 7202; VDI/VDE 2616-1
Load control	Automatic (load/hold/unload)
Max. specimen depth	150 mm
Brinell Scale [N]	61,29; 98,07; 153,2; 245,2; 294,2; 306,5; 612,9; 980,7; 1226; 1839 N
Data output	RS-232C Digimatic, USB2
Force dwell time	1-120s (Selectable in units of 1s)

All main units are supplied without power cord, indenters and hardness reference materials.
Please choose the required accessories separately.

Please choose for example:
63DIA023 diamond indenter ISO 6508 and ASTM E18
63ETB040DG 60HRC hardness reference material ISO 6508 and ASTM E18
02ZAA021 power cord

HR-530

Maximum workpiece size:
- Height 250 mm
- Depth 150 mm

HR-530L

Maximum workpiece size:
- Height 395 mm
- Depth 150 mm

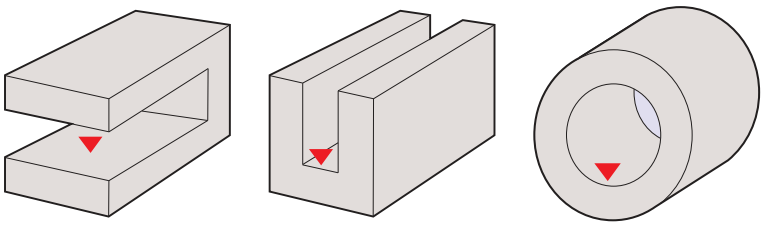

All products to be sold to commercial customers.
Product illustrations are without obligation. Product descriptions, in particular any and all technical specifications, are only binding when explicitly agreed upon.

Mitutoyo

Rockwell, Rockwell Superficial, Brinell Hardness Tester HR-530 and HR-600

Metric

No.	Model	Rockwell Scale Diamond	Rockwell Scale Ball 1,5875 mm	Rockwell Scale Ball 3,175 mm	Rockwell Scale Ball 6,35 mm	Rockwell Scale Ball 12,7 mm	Rockwell Superficial Scale Diamond	Rockwell Superficial Scale Ball 1,5875 mm
810-233-23/810-333-23/810-512-23	HR-530 HR-530L HR-610A	HRA HRD HRC	HRF HRB HRG	HRH HRE HRK	HRL HRM HRP	HRR HRS HRV	HR15N HR39N HR45N	HR15TW HR20TW HR45TW
810-522-23/810-527-21	HR-620A HR-620B	HRA HRD HRC	HRF HRB HRG	HRH HRE HRK	HRL HRM HRP	HRR HRS HRV	HR15N HR39N HR45N	HR15TW HR20TW HR45TW

No.	Rockwell Superficial Scale Ball 3,175 mm	Rockwell Superficial Scale Ball 6,35 mm	Rockwell Superficial Scale Ball 12,7 mm	Ball Indentation plastic test	Rockwell Plastic Test Scales Ball 3,175 mm	Rockwell Plastic Test Scales Ball 6,35 mm	Rockwell Plastic Test Scales Ball 12,7 mm	Rockwell α Test Ball 12,7 mm	Vickers Depth Measurement
810-233-23/810-333-23/810-512-23	HR15WW HR30WW HR45WW	HR15XW HR30XW HR54XW	HR15YW HR30YW HR45YW		HRE HRK	HRL HRM	HRR	(HRR)	
810-522-23/810-527-21	HR15WW HR30WW HR45WW	HR15XW HR30XW HR54XW	HR15YW HR30YW HR45YW	HB 49N HB 132N HB 358N HB 961N	HRE HRK	HRL HRM	HRR	(HRR)	HVD 30 HVD 50

No.	Brinell Scales indentation only Ball 1,0 mm	Brinell Scales indentation only Ball 2,5 mm	Brinell Scales indentation only Ball 5,0 mm	Brinell Scales indentation only Ball 10,0 mm	Brinell depth measurement Ball 2,5 mm
810-233-23/810-333-23/810-512-23	HBW 1/10 HBW 1/30	HBW 2,5/6,25 HBW 2,5/15625 HBW2,5/31,25 HBW 2,5/62,5 HBW 2,5/187,5	HBW 5/25 HBW 5/62,5 HBW 5/125	HBW 10/100	HBD 2,5/62,5 HBD 2,5/187,5
810-522-23/810-527-21	HBW 1/1 HBW 1/2,5 HBW 1/5 HBW 1/10 HBW 1/30	HBW 2,5/6,25 HBW 2,5/15625 HBW2,5/31,25 HBW 2,5/62,5 HBW 2,5/187,5	HBW 5/25 HBW 5/62,5 HBW 5/125 HBW5/250	HBW 10/100 HBW 10/250	HBD 2,5/62,5 HBD 2,5/187,5 HBD 5/250

All products to be sold to commercial customers.
Product illustrations are without obligation. Product descriptions, in particular any and all technical specifications, are only binding when explicitly agreed upon.

Rockwell Automatic Hardness Testing HR-600

Standard accessories

No.	Description
11AAD465	Ball indenter for Rockwell test, 1,5875mm tungsten carbide ball, without calibration certificate
19BAA073	Rockwell diamond indenter, HRC HRA

Series 810 - HR 600 Basic automatic models

With innovative design and functionality that enables a wide variety of measurements, the HR-600 Series delivers hardness testing that defies conventional thinking.

Go above and beyond

- High-End CNC Rockwell Hardness Testing Machine, providing a fully automatic Rockwell hardness test sequence.
- It is operated either with the provided display unit or by the use of AVPAK 3,1 hardness testing software (11AAE525-DEE AVPAK for HR-600A).
- When run with AVPAK 3,1, it can easily be integrated in an automation cell via the programmable Mitutoyo Form EIO automation interface.

The HR-600 Series combines the functionality of several test methods:

- Rockwell hardness testing
- Brinell hardness testing (indentation only)
- Brinell depth measurement hardness testing
- Vickers depth measurement hardness testing
- Hardness testing of plastic materials

Supporting all test methods in a single machine, this new series expands the range of available measurements.

With its high-resolution scale load cell developed uniquely by Mitutoyo that allows for high-precision test load feedback control and state-of-the-art design that delivers both aesthetics and usability on the ground, the new HR-600 Series enables hardness testing that defies conventional thinking.

New design with functional beauty.
With a table for mounting workpieces and head with vertical mobility, the HR-600 Series is built for operability and usability.
Its new design is highly focused on end-user usability, and the entire product structure has been inventively modified for functional beauty — a true embodiment of Mitutoyo's pioneering spirit.

Indenters, hardness reference aterials and power cord are not included in the scope of delivery and must be ordered separately.

Attention:

* requires optional accessories

** more on request

*** can be enhanced with additional accesories

All products to be sold to commercial customers.
Product illustrations are without obligation. Product descriptions, in particular any and all technical specifications, are only binding when explicitly agreed upon.

Mitutoyo

Rockwell Automatic Hardness Testing HR-600

No.	Rockwell Scale Diamond	Rockwell Scale Ball 1,5875 mm	Rockwell Scale Ball 3,175 mm	Rockwell Scale Ball 6,35 mm	Rockwell Scale Ball 12,7 mm	Rockwell Superficial Scale Diamond	Rockwell Superficial Scale Ball 1,5875 mm	Rockwell Superficial Scale Ball 3,175 mm	Rockwell Superficial Scale Ball 6,35 mm	Rockwell Superficial Scale Ball 12,7 mm
810-512-23	HRA; HRC, HRD	HRFW; HRBW; HRGW	HRHW; HREW; HRKW	HRLW; HRMW; HRPW	HRRW; HRSW; HRVW	HR15N; HR30N; HR45N	HR15TW, HR30TW; HR45TW	HR15WW, HR30WW; HR45WW	HR15XW, HR30XW; HR45XW	HR15YW, HR30YW; HR45YW

No.	Rockwell Plastic Test Scales Ball 3,175 mm	Rockwell Plastic Test Scales Ball 6,35 mm	Rockwell Plastic Test Scales Ball 12,7 mm	Rockwell α Test Ball 12,7 mm	Model	Brinell Scales indentation only Ball 1,0 mm	Brinell Scales indentation only Ball 2,5 mm	Brinell Scales indentation only Ball 5,0 mm	Brinell Scales indentation only Ball 10,0 mm	Brinell depth measurement Ball 2,5 mm
810-512-23	HRE; HRK	HRL; HRM	HRR	(HRR)	HR-610A	HBW 1/5; 1/10; HBW 1/30	HBW 2,5/6,25; HBW 2,5/15625; HBW 2,5/31,25; HBW 2,5/62,5; HBW 2,5/187,5	HBW 5/25; HBW 5/62,5; HBW 5/125	HBW 10/100	HBD 2,5/62,5; HBD 2,5/187,5

Optional accessories

No.	Description
K543390	Base plate 330x500 HR-600A, Rockwell hardness testing machines
06AFM380D	USB Input Tool Direct (Digimatic USB), Flat 10-Pin Type
K543391	Guide rail f. base plate 330x500 HR-600A, Rockwell hardness testing machines
11AAD385	Contact unit HR-600 large, for 5,0mm, 10,0mm, 6,35mm, 12,7mm ball indenters
02AZD880G	U-WAVE-T, Buzzer Type, Wireless Transmitter
02AZD730G	U-WAVE-T, IP67 Type, Wireless Transmitter
02AZD790D	U-WAVE-T Connection Cable D, Flat 10-Pin Type
11AAD630	V-anvil HR-600 Ø20,0 -55,0mm, L 180,0mm, Rockwell hardness testing machines
11AAD668	Steel stand HR-600A, Rockwell hardness testing machines
810-530	X-axis 160mm HR-600A, Rockwell hardness testing machines
810-531	X-axis 300mm HR-600A, Rockwell hardness testing machines
936937	Digimatic Cable, Flat 10-Pin Type, 1m
11AAC236	MEXPAK-06, Software Hardness Test
64AAB607R	(R)ML REAL-TIME PROFESSIONAL V9
11AAD537	Foot switch with aluminum housing, Hardness testing machines
63BAL013	Replacement ball for Rockwell test, 1,5875mm, tungsten carbide, with DAkkS calibration certificate conforming to ISO 6508-2 and ASTM E18
63BAL014	Replacement ball for Rockwell test, 3,175mm, tungsten carbide, with DAkkS calibration certificate conforming to ISO 6508-2 and ASTM E18
63BAL015	Replacement ball for Rockwell test, 6,35mm, tungsten carbide, with DAkkS calibration certificate conforming to ISO 6508-2 and ASTM E18
63BAL016	Replacement ball for Rockwell test, 12,7mm, tungsten carbide, with DAkkS calibration certificate conforming to ASTM E18
264-505D	Statistic Processing Printer DP-1VA, Data Printer and Logger CEE Type
02AZD810D	U-WAVE-R Receiver, with U-WAVEPAK
11AAD466	Ball indenter for Rockwell test, 3,175mm tungsten carbide ball, without calibration certificate
11AAD467	Ball indenter for Rockwell test, 6,35mm tungsten carbide ball, without calibration certificate
11AAD468	Ball indenter for Rockwell test, 12,7mm tungsten carbide ball, without calibration certificate
11AAD469	Ball indenter for Brinell test, 1mm tungsten carbide ball, without calibration certificate
11AAD470	Ball indenter for Brinell test, 2,5mm tungsten carbide ball, without calibration certificate
11AAD471	Ball indenter for Brinell test, 5mm tungsten carbide ball, without calibration certificate
11AAD472	Ball indenter for Brinell test, 10mm tungsten carbide ball, without calibration certificate
19BAA162	Replacement ball for Brinell test, 1mm, tungsten carbide, without calibration certificate
19BAA163	Replacement ball for Brinell test, 2,5mm, tungsten carbide, without cali-

All products to be sold to commercial customers.
Product illustrations are without obligation. Product descriptions, in particular any and all technical specifications, are only binding when explicitly agreed upon.

Rockwell Automatic Hardness Testing HR-600

Series 810 - HR-600 Series

With innovative design and functionality that enables a wide variety of measurements, the HR-600 Series delivers hardness testing that defies conventional thinking.

Go above and beyond
High-End CNC Rockwell Hardness Testing Machine, providing a fully automatic Rockwell hardness test sequence.

It is operated either with the provided display unit or by the use of AVPAK 3,1 hardness testing software (11AAE525-DEE AVPAK for HR-600A).
When run with AVPAK 3,1, it can easily be integrated in an automation cell via the programmable Mitutoyo Form EIO automation interface.

The HR-600 Series combines the functionality of several test methods:

- Rockwell hardness testing
- Brinell hardness testing (indentation only)
- Brinell depth measurement hardness testing
- Vickers depth measurement hardness testing
- Hardness testing of plastic materials

Supporting all test methods in a single machine, this new series expands the range of available measurements.

With its high-resolution scale load cell developed uniquely by Mitutoyo that allows for high-precision test load feedback control and state-of-the-art design that delivers both aesthetics and usability on the ground, the new HR-600 Series enables hardness testing that defies conventional thinking.

New design with functional beauty.
With a table for mounting workpieces and head with vertical mobility, the HR-600 Series is built for operability and usability.

Its new design is highly focused on end-user usability, and the entire product structure has been inventively modified for functional beauty — a true embodiment of Mitutoyo's pioneering spirit.

Indenters, hardness reference materials and power cord are not included in the scope of delivery and must be ordered separately.

Attention:
* requires optional accessories

810-512-23
Model HR-610A

810-527-21
Model HR-620B with Display

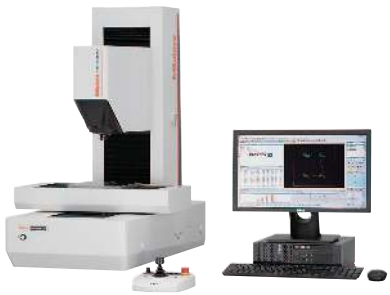

810-527-21
Model HR-620B with PC

All products to be sold to commercial customers.
Product illustrations are without obligation. Product descriptions, in particular any and all technical specifications, are only binding when explicitly agreed upon.

Rockwell Automatic Hardness Testing HR-600

810-512-23

No.	Hardness testing methods*	Initial test force N (kgf)	Test force N (kgf)
Model HR-610A	Rockwell: JIS B 7726.0:2017.0, ISO 6508.0-2.0:2015.0, ASTM E18.0-20.0 Brinell (indentation only): JIS B 7724.0:2017.0, ISO 6506.0-2.0:2017.0, ASTM E10.0-18.0 Plastic: JIS K 7202.0-2.0:2001.0, ISO 2039.0-2.0:1987.0, ASTM D785.0-08.0 [A&B] Brinell Depth Measurement HBT HBD: VDI/VDE 2616.0	Rockwell: 29.42 (3) 98.07 (10) Plastic: 98.07 (10) Brinell Depth Measurement HBT HBD: 98.07 (10) 490.3 (50)	Rockwell: 147.1 (15.0) 294.2 (30.0) 441.3 (45.0) 588.4 (60.0) 980.7 (100.0) 1471.0 (150.0) Brinell (indentation only): 49.03 (5.0) to 1839.0 (187.5) Plastic: 588.4 (60.0) 980.7 (100.0) 1471.0 (150.0) Brinell Depth Measurement HBT HBD: 612.9 (62.5) 1839.0 (187.5)

810-522-23

No.	Hardness testing methods*	Initial test force N (kgf)	Test force N (kgf)
Model HR-620A	Rockwell: JIS B 7726.0:2017.0, ISO 6508.0-2.0:2015.0, ASTM E18.0-20.0 Brinell (indentation only): JIS B 7724.0:2017.0, ISO 6506.0-2.0:2017.0, ASTM E10.0-18.0 Plastic: JIS K 7202.0-2.0:2001.0, ISO 2039.0-2.0:1987.0, ASTM D785.0-08.0 [A&B], ISO 2039.0-1.0:2001.0 Brinell Depth Measurement HBT HBD: VDI/VDE 2616.0 Vickers Depth Measurement HVT HVD: VDI/VDE 2616.0	Rockwell: 29.42 (3) 98.07 (10) Plastic: 9.807 (1), 98.07 (10) Brinell Depth Measurement HBT HBD: 98.07 (10) 490.3 (50) Vickers Depth Measurement HVT HVD: 9.807 (1)	Rockwell: 147.1 (15.0) 294.2 (30.0) 441.3 (45.0) 588.4 (60.0) 980.7 (100.0) 1471.0 (150.0) Brinell (indentation only): 9807.0 (1.0) to 2452.0 (250.0) Plastic: 588.4 (60.0) 980.7 (100.0) 1471.0 (150.0), 49.03 (5.0) 132.4 (13.5) 358.0 (36.5) 962.1 (98.1) Brinell Depth Measurement HBT HBD: 612.9 (62.5) 1839.0 (187.5) 2452.0 (250.0) Vickers Depth Measurement HVT HVD: 294.2 (30.0) 490.3 (50.0)

810-527-21

No.	Hardness testing methods*	Initial test force N (kgf)	Test force N (kgf)
Model HR-620B	Rockwell: JIS B 7726.0:2017.0, ISO 6508.0-2.0:2015.0, ASTM E18.0-20.0 Brinell (indentation only): JIS B 7724.0:2017.0, ISO 6506.0-2.0:2017.0, ASTM E10.0-18.0 Plastic: JIS K 7202.0-2.0:2001.0, ISO 2039.0-2.0:1987.0, ASTM D785.0-08.0 [A&B], ISO 2039.0-1.0:2001.0 Brinell Depth Measurement HBT HBD: VDI/VDE 2616.0 Vickers Depth Measurement HVT HVD: VDI/VDE 2616.0	Rockwell: 29.42 (3) 98.07 (10) Plastic: 9.807 (1), 98.07 (10) Brinell Depth Measurement HBT HBD: 98.07 (10) 490.3 (50) Vickers Depth Measurement HVT HVD: 9.807 (1)	Rockwell: 147.1 (15.0) 294.2 (30.0) 441.3 (45.0) 588.4 (60.0) 980.7 (100.0) 1471.0 (150.0) Brinell (indentation only): 9807.0 (1.0) to 2452.0 (250.0) Plastic: 588.4 (60.0) 980.7 (100.0) 1471.0 (150.0), 49.03 (5.0) 132.4 (13.5) 358.0 (36.5) 962.1 (98.1) Brinell Depth Measurement HBT HBD: 612.9 (62.5) 1839.0 (187.5) 2452.0 (250.0) Vickers Depth Measurement HVT HVD: 294.2 (30.0) 490.3 (50.0)

All products to be sold to commercial customers.
Product illustrations are without obligation. Product descriptions, in particular any and all technical specifications, are only binding when explicitly agreed upon.

Rockwell optional accessories

Accessories for Rockwell, Rockwell Superficial, Brinell Hardness Tester HR-530 and HR-600

Code number	Description	HR-210MR	HR-320MS	HR-430MR	HR-430MS	HR-530	HR-530L	HR-610A	HR-620A	HR-620B
11AAD600	Display unit HR-600 mm/inch									●*
11AAE270-DEE	AVPAK V3.1 hardness Testing Software									●
11AAE525-DEE	AVPAK V3.1 hardness Testing Software HR-600A							●	●	
12AAU423	Form Eio V4 Automation Software (AVPAK required)							●	●	●
264-505	DP-1VA Data logger		●	●	●	●	●	●*	●*	
936937	Digimatic cable 1m					●	●	●*	●*	
937387	Digimatic cable 1m		●	●	●					
02AZD810D	U-WAVE-R		●	●	●	●	●	●*	●*	●*
02AZD730G	U-WAVE-T		●	●	●	●	●	●*	●*	●*
02AZD880G	U-WAVE-T Buzzer type		●	●	●	●	●	●*	●*	●*
02AZD790E	U-WAVE-T Connection cable 6 Pin round		●	●	●					
02AZD790D	U-WAVE-T connection cable					●	●	●*	●*	●*
264-016-10	IT-016U Digimatic Input Tool		●	●	●	●	●	●*	●*	●*
06AFM380E	USB Input tool direct Connection cable 6 Pin round		●	●	●					
06AFM380D	USB Input tool direct Connection cable Flat Straight Type					●	●	●*	●*	●*
64AAB607R	MeasurLink Real-Time Professional	●	●	●	●	●	●	●	●	●
64AAB608R	MeasurLink Real-Time Professional 3D	●	●	●	●	●	●	●	●	●

●* only without AVPAK

Code number	Description	HR-210MR	HR-320MS	HR-430MR	HR-430MS	HR-530	HR-530L	HR-610A	HR-620A	HR-620B
K543817	Clamping device	●		●						
K543390	Extension plate HR-600A 500,0 x 330,0 mm							●	●	
K543391	Guide rail for extension plate HR-600A							●	●	
K543392	Adaption plate for eco-fix base plate HR-600 300,0 mm X-Aaxis							●	●	●
K543394	eco-fix base plate HR-600 300,0 x 200,0 mm w. handles							●	●	●
K543393	Levelling device for angled workpieces 120,0 x 150,0 mm	●	●	●	●	●	●	●	●	●
K543632	8,0mm contact unit HR-600 to be used with 63DIA009 or 63DIA024							●	●	●
11AAD385	Contact unit HR-600 large							●	●	●
810-027	Adjustable support for long workpieces	●	●	●	●	●	●			
810-028	Height adjustable jack rest	●	●	●	●	●	●			
810-037	Round table ø180,0 mm	●	●	●	●	●	●			
810-038	Round table ø250,0 mm	●	●	●	●	●	●			
810-039	Anvil, round ø64,0 mm	●	●	●	●	●	●			
810-029	V-anvil Ø50,0 mm- Ø100,0 mm L 400,0 mm	●	●	●	●	●	●			
810-040	V-anvil Ø15,0 mm- Ø60,0 mm L40,0 mm	●	●	●	●	●	●			
810-041	V-anvil Ø3,0 mm- Ø9,0 mm L40,0 mm	●	●	●	●	●	●			
810-042	V-anvil, stepped Ø4,0 mm- Ø16,0 mm L10,0 mm, step height 13,0 mm	●	●	●	●	●	●			
11AAD630	V-anvil Ø20,0 -55,0 mm L 180,0 mm							●	●	●
810-043	Spot anvil Ø12,0 mm	●	●	●	●	●	●			
810-044	Stepped spot anvil Ø5.5 mm, step height 13,0 mm	●	●	●	●	●	●			
810-030	Diamond spot anvil for superficial test									

All products to be sold to commercial customers.
Product illustrations are without obligation. Product descriptions, in particular any and all technical specifications, are only binding when explicitly agreed upon.

Mitutoyo

Impact Type Hardness Testing Unit HARDMATIC HH-411

Series 810

This is a lightweight, digital-reading portable hardness testing instrument for metal workpieces. The Hardmatic HH-411 offers you the following benefits:

- It operates on the rebound hardness principle (standardised according to ASTM A 956).
- Measurement is conducted with hardness value L (Leeb-value) but you can convert to any desired hardness scale.
- The display automatically shows GO/±NO GO with the tolerance function set and selected.
- It has a memory function for 1800 measured values, and automatic measuring direction angle-compensation.
- Expak software gives you simple data collection 11AAC238

Sample application

Model	HH-411
No.	**810-298-10**
Accuracy	±12 HL (800 HL +/- 1.5%)
Display unit	7-segment LCD
Hardness Display range	Leeb hardness: 1 to 999HL
	Conversion range / Increment
Vickers	43-950HV / 1 HV
Brinell	20-894 HB / 1 HB
Rockwell C	19,3-68,2 HRC / 0,1 HRC
Rockwell B	13,5-101,7 HRB / 0,1 HRB
Shore	13,2-99,3 HS / 0,1 HS
Tensile strength	499-1996 MPa / 1 MPa
Specimen Thickness	Min. 5 mm
Specimen Mass	5 kg or more
Specimen requirements	Min. specimen thickness of 5mm or more and mass of 5kg or more (However, a specimen of mass of 0.1 to 5kg is measurable by securing to a massive base) Testing point: 5mm or more from edge of specimen, 3mm or more between testing points Specimen surface roughness: Ra of 2µm or less
Mass	320 g
Connector cable for	HH-411
PIN	Round 6
USB-ITN	06AFM380E
DP-1VA (264-505)	965013
IT-016U 264-016-10 Hardmatic table	937387

UD-412 Impact device
HLDC scale
Use for inner walls of cylinders. The grip is short to allow positioning within a cylinder.

UD-413 Impact device
HLD+15 scale
Use for concave workpieces such as gear teeth, grooves, etc.

UD-414 impact device
HLDL scale
Use for gear teeth, welded corners, etc.

Specifications

Impact device	Impact hammer with integrated carbide-ball tip, D scale (ASTM A 956)
Functions	Auto angle compensation, Offset, OK/NG judgement, Hardness scale conversion, Data storage (1800 data entries), Statistical analysis (Average value, Max. value, Min. value, Dispersion), Auto sleep function, Impact counter display function
Power supply	Battery LR6 (2 pcs.) or AC adapter (optional)
Data output	RS-232C, SPC

Standard accessories

No.	Description
19BAA460	Detector Cable f. UD-41X
19BAA258	Cleaning brush, HH-411
810-287-10	Impact Hammer D

Optional accessories

No.	Description
19BAA458	Impact hammer, DL impact device
11AAC238	EXPAK-08 data processing program, HH-411
19BAA238	Leeb rebound hardness testing device, RS232C cable HH-411
Computer accessories	
937387	Digimatic Cable, Round 6-Pin Type, 1m
Indenters	
810-288-10	Leeb impact device, HLDC impact device UD-412
810-289-10	Leeb impact device, HLD+15 impact device UD-413
810-290-10	Leeb impact device, HLDL impact device UD-414
Support rings for D/DC type impact devices	
19BAA248	Support ring cylindrical specimen, R10-20 HH-411
19BAA249	Support ring hollow cylindrical specim., R14-20 HH-411
19BAA250	Support ring spherical specimen, R10-27.5 HH-411
19BAA251	Support ring hollow spherical specim., R13.5-20 HH-411 (D/DC impact devices)

All products to be sold to commercial customers.
Product illustrations are without obligation. Product descriptions, in particular any and all technical specifications, are only binding when explicitly agreed upon.

Digital and Analogue Durometers HARDMATIC HH-300

Series 811 - Shore A

These compact digital/dial durometers in the Shore A scale can test a range of different materials and offer you the following benefits:

- You can use them for testing the hardness of the materials including soft rubber, elastomers, natural rubber, casting resin, neoprene, polyesters, soft PVC, leather, etc.

Model	HH-331	HH-332	HH-335	HH-336	HH-335-01	HH-336-01
No.	**811-331-10**	**811-332-10**	**811-335-10**	**811-336-10**	**811-335-11**	**811-336-11**
Shore Scale	Shore A	Shore A	Shore A	Shore A	Shore A	Shore A
Display	Analog Dial	Digital	Analog Dial	Digital	Analog Dial	Digital
Indenter b	ø 1,25 mm	ø 1,25 mm	ø 1,25 mm	ø 1,25 mm	ø 1,25 mm	ø 1,25 mm
Indenter d	ø 0,79 mm	ø 0,79 mm	ø 0,79 mm	ø ,079 mm	ø 0,79 mm	ø 0,79 mm
θ	35°	35°	35°	35°	35°	35°
Pressure foot a	ø 3 mm	ø 3 mm	ø 3 mm	ø 3 mm	ø 3 mm	ø 3 mm
Pressure foot f	ø 18 mm	ø 18 mm	44 x 18 mm	44 x 18 mm	ø 18 mm	ø 18 mm
Indenter protrusion	2,5 mm	2,5 mm	2,5 mm	2,5 mm	2,5 mm	2,5 mm
Spring force WE, WA, WD	WA=550+75 HA [mN]	WA=550+75 HA [mN]	WA=550+75 HA [mN]	WA=550+75 HA [mN]	WA=550+75 HA [mN]	WA=550+75 HA [mN]
Mass	0,32 kg	0,31 kg	0,3 kg	0,29 kg	0,27 kg	0,26 kg
Connector cable for	HH-300 Series	HH-300 Series	HH-300 Series	HH-300 Series	HH-300 Series	HH-300 Series
PIN	Flat	Flat	Flat	Flat	Flat	Flat
USB-ITN	06AFM380F	06AFM380F	06AFM380F	06AFM380F	06AFM380F	06AFM380F
DP-1VA (264-505)	959149	959149	959149	959149	959149	959149
IT-016U 264-016-10 Hardmatic table	937387	937387	937387	937387	937387	937387

811-331-10

811-332-10

811-335-11

811-336-11

Optional accessories

No.	Description
218000MIT	35, 60, 90 Shore A Shore Hardness Reference Material Set
905338	Digimatic Cable, Flat Straight Type, 1m
811-013	Testing stand, HH-300 Series Shore A compact types
Testing stand	
811-019	Testing stand, HH-300 Series Shore A long types

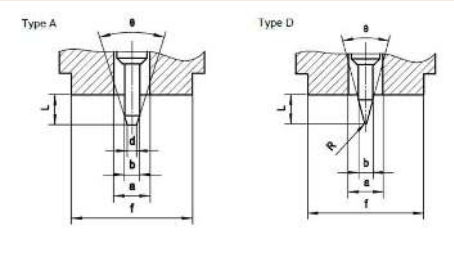

Indenter geometry Shore A and D

Testing stand
- Workstage dimension: Ø90 mm
- Max. specimen height: 90mm

218000MIT Shore A

All products to be sold to commercial customers.
Product illustrations are without obligation. Product descriptions, in particular any and all technical specifications, are only binding when explicitly agreed upon.

Mitutoyo

Digital and Analogue Durometers HARDMATIC HH-300

Series 811 - Shore E

These compact digital/dial durometers in the Shore E scale can test a range of different materials and offer you the following benefits:

- You can use them for testing the hardness of the materials including soft rubber, elastomers, natural rubber, casting resin, neoprene, polyesters, soft PVC, leather, etc.

Model	HH-330	HH-329
No.	**811-330-10**	**811-329-10**
Shore Scale	Shore E	-
Display	Digital	Analog Dial
Indenter b	ø 5 mm	ø 1,25 mm
Indenter r	ø 2,5 mm	R 0,1 mm
θ	-	30°
Pressure foot a	ø 5,4 mm	ø 3 mm
Pressure foot f	44 x 18 mm	ø 18 mm
Indenter protrusion	2,5 mm	2,5 mm
Spring force WE, WA, WD	WE=550+75 HE [mN]	WD=444,5H D [mN]
Mass	0,29 kg	0,32 kg
Connector cable for	HH-300 Series	HH-300 Series
PIN	Flat	Flat
USB-ITN	06AFM380F	06AFM380F
DP-1VA (264-505)	959149	959149
IT-016U 264-016-10 Hardmatic table	937387	937387

811-329-10

811-330-10

Optional accessories

No.	Description
218010AOMI	27, 62, 90 Shore AO Shore Hardness Reference Material Set
905338	Digimatic Cable, Flat Straight Type, 1m
Testing stand	
811-013	Testing stand, HH-300 Series Shore A compact types

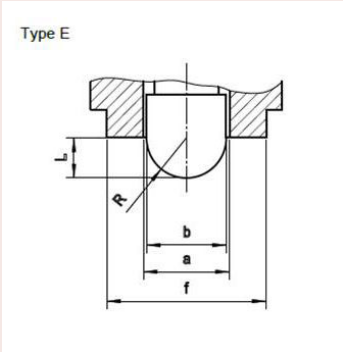

Indenter geometry Shore E

Testing stand
- Workstage dimension: Ø90 mm
- Max. specimen height: 90mm

218010AOMI

All products to be sold to commercial customers.
Product illustrations are without obligation. Product descriptions, in particular any and all technical specifications, are only binding when explicitly agreed upon.

Digital and Analogue Durometers HARDMATIC HH-300

Series 811 - Shore D

These compact digital/dial durometers in the Shore D scale can test a range of different materials and offer you the following benefits:

- You can use them for testing the hardness of the materials including hard rubber, hard plastics, acrylic glass, Polystyrene, rigid thermoplastics, vinyl, cellulose acetate, etc.

Model	HH-333	HH-334	HH-337	HH-338	HH-337-01	HH-338-01
No.	**811-333-10**	**811-334-10**	**811-337-10**	**811-338-10**	**811-337-11**	**811-338-11**
Display	Analog Dial	Digital	Analog Dial	Digital	Analog Dial	Digital
Indenter b	ø 1,25 mm	ø 1,25 mm	ø 1,25 mm	ø 1,25 mm	ø 1,25 mm	ø 1,25 mm
Indenter r	R 0,1 mm	R 0,1 mm	R 0,1 mm	R 0,1 mm	R 0,1 mm	R 0,1 mm
θ	30°	30°	30°	30°	30°	30°
Pressure foot a	ø 3 mm	ø 3 mm	ø 3 mm	ø 3 mm	ø 3 mm	ø 3 mm
Pressure foot f	ø 18 mm	ø 18 mm	44 x 18 mm	44 x 18 mm	ø 18 mm	ø 18 mm
Indenter protrusion	2,5 mm	2,5 mm	2,5 mm	2,5 mm	2,5 mm	2,5 mm
Spring force WE, WA, WD	WD=444,5H D [mN]	WD=444,5H D [mN]	WD=444,5H D [mN]	WD=444,5H D [mN]	WD=444,5H D [mN]	WD=444,5H D [mN]
Mass	0,32 kg	0,31 kg	0,3 kg	0,29 kg	0,27 kg	0,26 kg
Connector cable for	HH-300 Series	HH-300 Series	HH-300 Series	HH-300 Series	HH-300 Series	HH-300 Series
PIN	Flat	Flat	Flat	Flat	Flat	Flat
USB-ITN	06AFM380F	06AFM380F	06AFM380F	06AFM380F	06AFM380F	06AFM380F
DP-1VA (264-505)	959149	959149	959149	959149	959149	959149
IT-016U 264-016-10 Hardmatic table	937387	937387	937387	937387	937387	937387

811-333-10

811-334-10

811-337-11

811-338-11

Optional accessories

No.	Description
905338	Digimatic Cable, Flat Straight Type, 1m
811-012	Testing stand, HH-300 Series Shore D all types
218000DMIT	35, 60, 85 Shore D Shore Hardness Reference Material Set

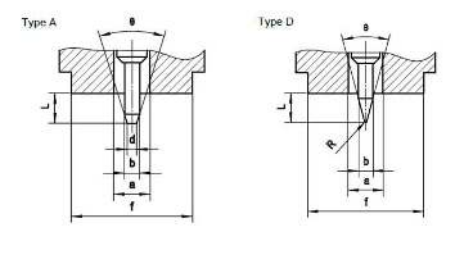

Indenter geometry Shore A and D

218000DMIT Shore D

All products to be sold to commercial customers.
Product illustrations are without obligation. Product descriptions, in particular any and all technical specifications, are only binding when explicitly agreed upon.

Mitutoyo

Small- and Medium Size CMMs
Page 563

Large Size CMMs
Page 570

In-Line and Shopfloor CMMs
Page 572

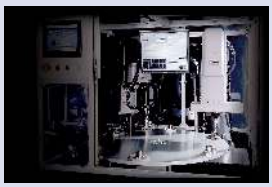

CMM Software
Page 576

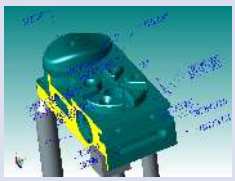

CMM Probes
Page 581

Fixture Systems and Enclosures
Page 590

All products to be sold to commercial customers.
Product illustrations are without obligation. Product descriptions, in particular any and all technical specifications, are only binding when explicitly agreed upon.

CRYSTA-Apex V500, 700, 900 Series

Specifications

Accuracy	E0, MPE from: (1,7+0,3L/100) µm
Max. drive speed	519 mm/s (3-axis)
Digital step	0,1 µm

Accuracy is specified for the following environmental conditions for the CMM:

Temperature range		18°C - 22°C	16°C - 26°C
Temperature change	Per hour	2°K	2°K
	Per 24 hours	2°K	5°K
Temperature gradient	Vertical	1 K/m	1 K/m
	Horizontal	1 K/m	1 K/m

Mitutoyo eco-fix fixture kits:
- flexible & quick setup
- time & cost saving
- easy adaption of product changes

StyliCleaner always Reliable and Clean Stylus

Optional joystick-box M2 with speed adjustment knob

CRYSTA-Apex V brochure on request

Scan QR Code with your mobile device and watch our product videos on YouTube

CRYSTA-APEX V 500, 700 & 900 Series

The latest generation CRYSTA-Apex coordinate measuring machines, the new CRYSTA-Apex V Series, is packed with state of the art technology, necessary for performing very accurate measurements at high speed. All new, using Mitutoyo's world-renowned ABS scales, the CRYSTA-Apex V series has a high resistance to environmental conditions and does not require to perform homing upon start-up. SMS capability enables status and service monitoring, ready for use in a Smart Factory environment.

A future proof investment, the CRYSTA-Apex V is capable of tackling any task you might have in the future thanks to its ability to change or add probe systems and software with ease.

Main benefits:

- Proven lightweight bridge-type construction with high rigidity air-bearings on every axis
- High accuracy, high speed and high acceleration
- Temperature sensors for compensation of machine and workpiece from 16° to 26°C and monitoring of the environmental temperature.
- ABS linear scales provide high environmental resistance and saves time at start-up as homing is not necessary
- UC480 controller supporting Multi-sensor and SMS functionality (Smart Measuring System)

CRYSTA-Apex V9106

CRYSTA-Apex V Models:

No.	Model	Range [mm]	Comments
191-121	CRYSTA-Apex V544	500 x 400 x 400	Standard stand
191-122	CRYSTA-Apex V544	500 x 400 x 400	Anti vibration stand
191-125	CRYSTA-Apex V574	500 x 700 x 400	Standard stand
191-126	CRYSTA-Apex V574	500 x 700 x 400	Anti vibration stand
191-561	CRYSTA-Apex V776	700 x 700 x 600	Standard stand
191-562	CRYSTA-Apex V776	700 x 700 x 600	Anti vibration stand
191-565	CRYSTA-Apex V7106	700 x 1000 x 600	Standard stand
191-566	CRYSTA-Apex V7106	700 x 1000 x 600	Anti vibration stand
191-569	CRYSTA-Apex V9106	900 x 1000 x 600	Standard stand
191-571	CRYSTA-Apex V9106	900 x 1000 x 600	Anti vibration stand
191-574	CRYSTA-Apex V9166	900 x 1600 x 600	Standard stand
191-575	CRYSTA-Apex V9166	900 x 1600 x 600	Anti vibration stand
191-578	CRYSTA-Apex V9206	900 x 2000 x 600	Standard stand
191-579	CRYSTA-Apex V9206	900 x 2000 x 600	Anti vibration stand
191-583	CRYSTA-Apex V9108	900 x 1000 x 800	Standard stand
191-584	CRYSTA-Apex V9108	900 x 1000 x 800	Anti vibration stand
191-587	CRYSTA-Apex V9168	900 x 1600 x 800	Standard stand
191-588	CRYSTA-Apex V9168	900 x 1600 x 800	Anti vibration stand
191-592	CRYSTA-Apex V9208	900 x 2000 x 800	Standard stand
191-593	CRYSTA-Apex V9208	900 x 2000 x 800	Anti vibration stand

All products to be sold to commercial customers.
Product illustrations are without obligation. Product descriptions, in particular any and all technical specifications, are only binding when explicitly agreed upon.

CRYSTA-Apex V1200 Series

Series 191 - Standard CNC CMM

The latest generation CRYSTA-Apex coordinate measuring machines, the new CRYSTA-Apex V Series, is packed with state of the art technology, necessary for performing very accurate measurements at high speed. All new, using Mitutoyo's world-renowned ABS scales, the CRYSTA-Apex V series has a high resistance to environmental conditions and does not require to perform homing upon start-up.

SMS capability enables status and service monitoring, ready for use in a Smart Factory environment.

A future proof investment, the CRYSTA-Apex V is capable of tackling any task you might have in the future thanks to its ability to change or add probe systems and software with ease.

Main benefits:

- Proven lightweight bridge-type construction with high rigidity air-bearings on every axis
- High accuracy, high speed and high acceleration
- Temperature sensors for compensation of machine and workpiece from 16° to 26°C and monitoring of the environmental temperature.
- ABS linear scales provide high environmental resistance and saves time at start-up as homing is not necessary
- UC480 controller supporting Multi-sensor and SMS functionality (Smart Measuring System)

CRYSTA-Apex V122010

CRYSTA-Apex V Models:

No.	Model	Range [mm]	Comments
191-481	CRYSTA-Apex V121210	1200 x 1200 x 1000	Standard stand
191-482	CRYSTA-Apex V121210	1200 x 1200 x 1000	Anti vibration stand
191-485	CRYSTA-Apex V122010	1200 x 2000 x 1000	Standard stand
191-486	CRYSTA-Apex V122010	1200 x 2000 x 1000	Anti vibration stand
191-489	CRYSTA-Apex V123010	1200 x 3000 x 1000	Standard stand
191-491	CRYSTA-Apex V123010	1200 x 3000 x 1000	Anti vibration stand

Specifications

Accuracy	E0, MPE from: (2,3+0,3L/100) µm
Max. drive speed	693 mm/s (3-axis)
Digital step	0,1 µm

Accuracy is specified for the following environmental conditions for the CMM:

Temperature range		18°C - 22°C	16°C - 26°C
Temperature change	Per hour	2°K	2°K
	Per 24 hours	2°K	5°K
Temperature gradient	Vertical	1 K/m	1 K/m
	Horizontal	1 K/m	1 K/m

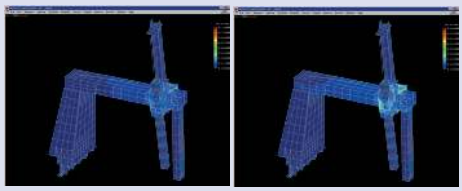

The machine structure has been optimized using FEM (Finite-element Method) and modal analysis

Temperature compensation system (temperature sensors)

Mitutoyo offers you over 600 styli plus highly specialised equipment for your measuring task - Refer to the small tool section of the catalogue for detailed information.

Joystick-box V2 with speed adjustment knob, standard accessory

CRYSTA-Apex V brochure on request

StyliCleaner always Reliable and Clean Stylus

All products to be sold to commercial customers.
Product illustrations are without obligation. Product descriptions, in particular any and all technical specifications, are only binding when explicitly agreed upon.

CRYSTA-Apex V1600 & 2000 Series

Specifications

Accuracy	E0, MPE from: (3,3+0,45L/100) µm
Max. drive speed	693 mm/s (3-axis)
Digital step	0,1 µm

Joystick-box V2 with speed adjustment knob, standard accessory.

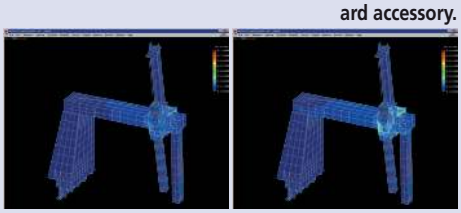

The machine structure has been optimized using FEM (Finite-element Method) and modal analysis

CRYSTA-Apex V brochure on request

StyliCleaner always Reliable and Clean Stylus

Series 191 - Standard CNC CMM

The CRYSTA-Apex V1600 & 2000 series offers you up to 12,8m³ measuring volume and still keeps an excellent 4,5 µm accuracy or better.

This series is developed for supporting quality evaluation of volumetric parts.
This high performance, cost effective coordinate measuring machine, designed and constructed according to Mitutoyo's extensive experience in CNC CMM technology.

Ready for touch trigger probe, scanning probe, optical probe and laser scanner probe.

Main benefits:

- Proven lightweight bridge-type construction with high rigidity air-bearings on every axis
- High accuracy, high speed and high acceleration
- Temperature sensors for compensation of machine and workpiece from 16° to 24°C and monitoring of the environmental temperature.
- ABS linear scales provide high environmental resistance and saves time at start-up as homing is not necessary
- UC480 controller supporting Multi-sensor and SMS functionality (Smart Measuring System)

CRYSTA-Apex V162012

CRYSTA-Apex V Models:

No.	Model	Range [mm]	Comments
191-848	CRYSTA-Apex V 162012	1600 x 2000 x 1200	Standard stand
191-848H	CRYSTA-Apex V 162016	1600 x 2000 x 1600	Standard stand
191-849	CRYSTA-Apex V 162012	1600 x 2000 x 1200	Anti vibration stand
191-849H	CRYSTA-Apex V 162016	1600 x 2000 x 1600	Anti vibration stand
191-853	CRYSTA-Apex V 163012	1600 x 3000 x 1200	Standard stand
191-853H	CRYSTA-Apex V 163016	1600 x 3000 x 1600	Standard stand
191-854	CRYSTA-Apex V 163012	1600 x 3000 x 1200	Anti vibration stand
191-854H	CRYSTA-Apex V 163016	1600 x 3000 x 1600	Anti vibration stand
191-857	CRYSTA-Apex V 164012	1600 x 4000 x 1200	Standard stand
191-857H	CRYSTA-Apex V 164016	1600 x 4000 x 1600	Standard stand
191-858	CRYSTA-Apex V 164012	1600 x 4000 x 1200	Anti vibration stand
191-858H	CRYSTA-Apex V 164016	1600 x 4000 x 1600	Anti vibration stand
191-812H	CRYSTA-Apex V 203016	2000 x 3000 x 1600	Standard stand
191-813H	CRYSTA-Apex V203016	2000 x 3000 x 1600	Anti vibration stand
191-817H	CRYSTA-Apex V 204016	2000 x 4000 x 1600	Anti vibration stand

All products to be sold to commercial customers.
Product illustrations are without obligation. Product descriptions, in particular any and all technical specifications, are only binding when explicitly agreed upon.

Mitutoyo

STRATO-Apex 500, 700 & 900 Series

Series 355 - High accuracy CNC CMM

The challenges for measurement equipment are rising. Products are continuously improving as a result the lifetime of products is increasing while their energy consumption is reduced. Additionally, the throughput of production is driven up. All these facts must be taken into account for your measuring equipment.
With the STRATO-Apex CMM, Mitutoyo offers you the opportunity to match both: precision and velocity.

This high accuracy CNC coordinate measuring machine that allows you to get accurate results at lightning speed.

Main benefits:

- High measurement accuracy and high-speed motion
- High-performance scanning
- Ultra high precision scales on each axis, resolution 0,02 µm
- Temperature sensors for monitoring of the environmental temperature and compensation of machine and workpiece
- Anti-vibration system reduces the impact of nearby vibration sources (optional for 574)
- Multi-sensors capability
- UC480 controller supporting Multi-sensor and SMS functionality (Smart Measuring System)

STRATO-Apex 9166

STRATO-Apex Models:

No.	Model	Range [mm]	Comments
355-701	STRATO-Apex 574	500 x 700 x 400	Standard stand
355-702	STRATO-Apex 574	500 x 700 x 400	Anti vibration stand
355-705-10	STRATO-Apex 776	700 x 700 x 600	Anti vibration stand
355-707-10	STRATO-Apex 7106	700 x 1000 x 600	Anti vibration stand
355-709-10	STRATO-Apex 9106	900 x 1000 x 600	Anti vibration stand
355-712-10	STRATO-Apex 9166	900 x 1600 x 600	Anti vibration stand

Specifications

Accuracy	E0, MPE from: (0,7+0,25L/100) µm
Max. drive speed	519 mm/s (3-axis)
Digital step	500: 0,05 µm 700/900: 0,02 µm

Accuracy is specified for the following environmental conditions for the CMM:

Temperature range	Series 500: 18°C -22°C Series 700/900: 19°C -21°C	
Temperature change	Per hour	1°K
	Per 24 hours	2°K
Temperature gradient	Vertical	1 K/m
	Horizontal	1 K/m

Optional joystick-box M2 with speed adjustment knob

Mitutoyo eco-fix fixture kits:
- flexible & quick setup
- time & cost saving
- easy adaption of product changes

Refer to the STRATO-Apex brochure

StyliCleaner always Reliable and Clean Stylus

All products to be sold to commercial customers.
Product illustrations are without obligation. Product descriptions, in particular any and all technical specifications, are only binding when explicitly agreed upon.

LEGEX Series

Specifications

Accuracy	E0, MPE from: (0,28+0,1L/100) µm
Max. drive speed	200 mm/s (3-axis)
Digital step	0,01 µm

Optional joystick-box M2 with speed adjustment knob

CMM calibration using a virtually zero thermal expansion glass gauge

Mitutoyo offers you over 600 styli plus highly specialised equipment for your measuring task.

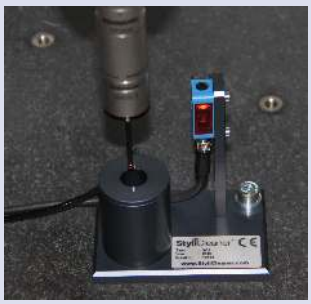

StyliCleaner always Reliable and Clean Stylus

Series 356 - Ultra-High Precision Premium CNC CMM

The LEGEX Series is an ultra-high precision CNC coordinate measuring machine.

A fixed bridge structure and precision air bearings running on highly rigged guideways, ensure superior motion stability and ultrahigh geometrical accuracy. Drive systems placed in the "Center of gravity" of the sliders, gives best possible dynamic performance. In addition, an active anti-vibration stand has have been utilized to provide ultra-high accuracy.

The construction is designed for thermal stability, low expansion crystallized glass scales and temperature compensation, results in guaranteed high accuracy within a temperature range of 18 °C to 22 °C.

Main benefits:

- Rigorous analysis of all possible error-producing factors, and elimination or minimization of their effects, delivers unsurpassed accuracy of 0,28µm
- Ultra-high accuracy crystallized-glass scale with the ultra-low expansion coefficient of 0,01x10-6/K is used on each axis
- The fixed bridge structure and precision air bearings, running on highly rigid guideways, give you superior motion stability and ultra-high geometrical accuracy
- UC480 controller supporting Multi-sensor and SMS functionality (Smart Measuring System)
- You can use several different types of optional probe systems, including Mitutoyo's high precision MPP310Q scanning probe

LEGEX 9106

LEGEX Models:

No.	Model	Range [mm]	Comments
356-407	LEGEX574	500 x 700 x 450	Anti vibration stand
356-417	LEGEX774	700 x 700 x 450	Anti vibration stand
356-427	LEGEX776	700 x 700 x 600	Anti vibration stand
356-437	LEGEX9106	900 x 1000 x 600	Anti vibration stand

All products to be sold to commercial customers.
Product illustrations are without obligation. Product descriptions, in particular any and all technical specifications, are only binding when explicitly agreed upon.

PH20, 5-axis touch trigger operation

The CRYSTA-Apex V500/700/900 series can be equipped with the PH20 probe head that will provide you 5-axis touch trigger operation for significantly higher productivity.

Main benefits:

- 5-Axis operation reduces the time required for probe rotational movements and allows more flexible positioning.
- Easy access to complex workpieces and time saving during both programming and measurement.
- PH20 supports "Head Touch" operation for rapid measurement using the two rotational axis of the probe head only.
- Creation of automatic part programs with the PH20 probe head, is fully supported in the optional MiCAT Planner software.
- Enhanced flexibility with TCR-20 change rack.

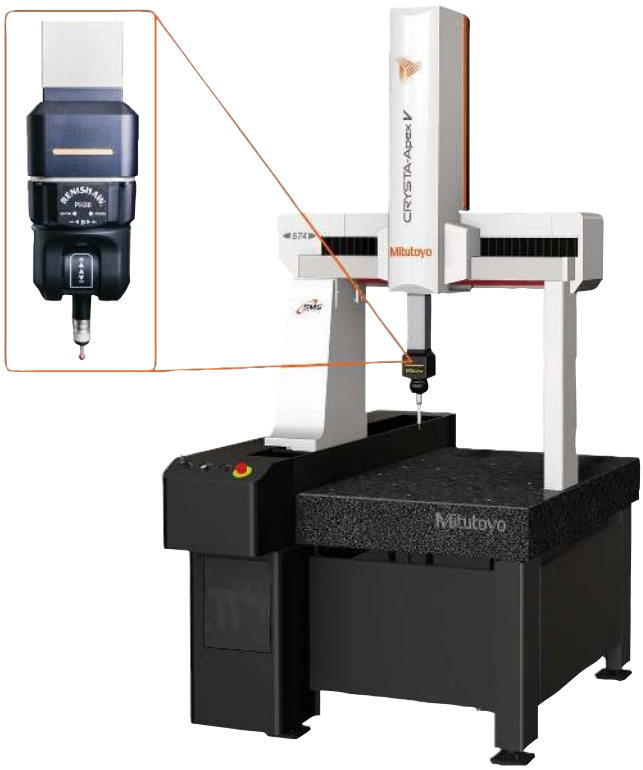

Crysta-Apex V 574

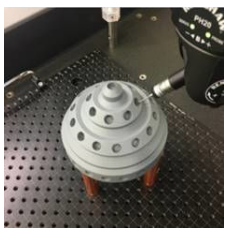

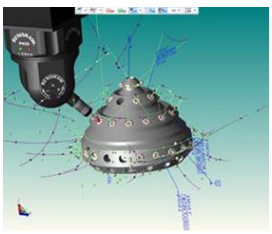

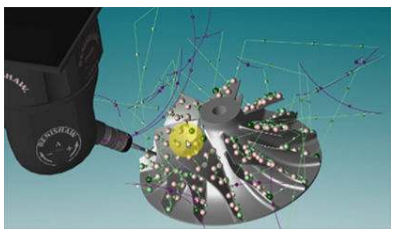

Optional TCR-20 change rack

Mitutoyo eco-fix fixture kits:
- flexible & quick setup
- time & cost saving
- easy adaption of product changes

Scan QR Code with your mobile device and watch our product videos on YouTube

StyliCleaner always Reliable and Clean Stylus

All products to be sold to commercial customers.
Product illustrations are without obligation. Product descriptions, in particular any and all technical specifications, are only binding when explicitly agreed upon.

REVO-2, 5-axis scanning operation

Specifications

Accuracy	E0, MPE from: (2,9+4L/1000) µm
Max. drive speed	300 mm/s (3-axis)
Digital step	0,1 µm

Refer to the CRYSTA-Apex V brochure

StyliCleaner always Reliable and Clean Stylus

5-axis operation reduces the time required for probe repositioning movements and allows more flexible positioning. This also facilitates access to complex workpieces and saves time during both programming and measurement.

The CRYSTA-Apex EX1200R series are equipped with the REVO-2 probe head which allows ultra high-speed 5-axis scanning (max. 500 mm/s), far surpassing conventional -axis control.

Support for high-speed sampling of up to 4 points per second allows acquisition of densely spaced measurement points, even during fast scanning.

- Internal implementation of laser sensing technology ensures high-accuracy measurement, even with long styli (up to 500 mm*1).

*1 Distance from probe rotation center to stylus tip

No.	Model	Range [mm]	Comments
191-481V	CRYSTA-Apex EX121210R	1200 x 1200 x 1000	Standard stand
191-482V	CRYSTA-Apex EX121210R	1200 x 1200 x 1000	Anti vibration stand
191-485V	CRYSTA-Apex EX122010R	1200 x 2000 x 1000	Standard stand
191-486V	CRYSTA-Apex EX122010R	1200 x 2000 x 1000	Anti vibration stand
191-489V	CRYSTA-Apex EX123010R	1200 x 3000 x 1000	Standard stand
191-491V	CRYSTA-Apex EX123010R	1200 x 3000 x 1000	Anti vibration stand

All products to be sold to commercial customers.
Product illustrations are without obligation. Product descriptions, in particular any and all technical specifications, are only binding when explicitly agreed upon.

High-accuracy Separate Guide Type MICROCORD STRATO-Apex Series

- The STRATO-Apex Series are CNC CMMs that use Mitutoyo's standard structure for large machines which are designed to be used for measuring large and heavx workpieces with high accuracy. The picture below gives a good idea of how large the machine is. The measuring accuracy and drive speed are the world's highest in the X-axis measuring range of 2000mm and 3000mm.
- High-accuracy linear encoders (manufactured in-house) are built into the length measuring units used for position detection. Their excellent position detection capability is what makes the control of the high-accuracy devices possible. The series also applies a multitude of technologies regarding structure, control, component processing, assembly, and other aspects that enable large CMMs to deliver high-accuracy measurements.
- These series are equipped with a system to automatically restore accuracy deterioration (MOVAC) caused by foundation deformation as a standard feature.
- Equipped with a temperature compensation system that guarantees the specified accuracy within the wide range of 18 to 22°C under certain environmental conditions, although high-accuracy CMMs should ideally be installed in a temperature controlled room.
- Safety devices such as a Z-axis beam sensor, tape switch, and area sensor are available as options.

STRATO-Apex 3000G Series

Joystick-box V2 with speed adjustment knob, standard accessory.

Specifications

Accuracy	E0, MPE from: (3,5+0,45L/100) µm
Max. drive speed	520 mm/s (3-axis)
Digital step	0,1 µm

Accuracy is specified for the following environmental conditions for the CMM:

Temperature range		18°C - 22°C
Temperature change	Per hour	1 K
	Per 24 hours	2 K
Temperature gradient	Vertical	1 K/m
	Horizontal	1 K/m

Scanning with probe SP80 and 100 mm styli.

Safety System
For this type series, Mitutoyo offers a customized safety system. Depending on the local situation in your facility, Mitutoyo will propose a tailor-made solution meeting the requirements of the Machinery Directive.

Foundation
This type series always requires a special foundation. Please contact your local Mitutoyo partner for further details.

StyliCleaner always Reliable and Clean Stylus

All products to be sold to commercial customers.
Product illustrations are without obligation. Product descriptions, in particular any and all technical specifications, are only binding when explicitly agreed upon.

CARB-Series

Series 360 - Car Body Measuring System

A large, horizontal-type arm CNC CMM for measuring car bodies or similar components. Single/ dual-head types are available ; the dual-head type measures by controlling two heads simultaneously, one from each side.

MAIN FEATURES CARBstrato : large, high precision, dual-head type.

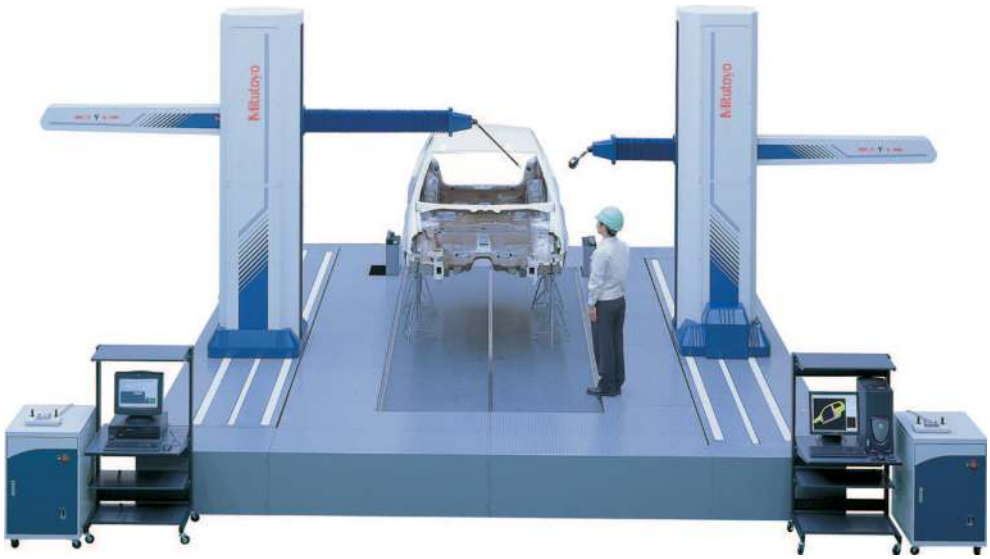

CARBstrato

No.	Accuracy[1] $E_{0,MPE}$
CARBstrato	(18+20L/1000) µm

[1] According to ISO 10360-2:2010 when using probe SP25M, module SM25-1, stylus ø 4x50 mm. L= measured length (mm).

Specifications

Range X-axis	4,000-8,000 mm
Scale	High accuracy linear encoder
Guide system	X-axis : linear guide ; YZ-axis : air bearing
Max. drive speed	866 mm/s (CARBstrato)
3D Acceleration	0,2G (CARBstrato)
Digital step	0,1 µm

CARBstrato brochure on request

Safety System
For this type series, Mitutoyo offers a customized safety system. Depending on the local situation in your facility, Mitutoyo will propose a tailor-made solution meeting the requirements of the Machinery Directive.

Foundation
This type series always requires a special foundation. Please contact your local Mitutoyo partner for further details.

Mitutoyo offers you over 600 styli plus highly specialised equipment for your measuring task - Refer to the small tool section of the catalogue for detailed information.

All products to be sold to commercial customers.
Product illustrations are without obligation. Product descriptions, in particular any and all technical specifications, are only binding when explicitly agreed upon.

MACH Ko-ga-me

Series 357 - Agile Measurement System

The MACH Ko-ga-me is a unique and compact CMM ideal for integration into in-line systems for automated measurements. Perfect for automated cells and stand-alone solutions, this compact metrology solution delivers reliability in a lightweight and easy to mount form factor. The CMM also provides flexible production performance for any manufacturing environment thanks to its guaranteed accuracy within a temperature range of 10 °C up to 35 °C.

Main benefits:

- High measurement speed and acceleration
- Extremely small footprint saves valuable space for production
- Ideal for single feature inspection and usable with both scanning and touch-trigger probes
- Absolute measurements
- Maintenance-free linear-guidings (no air bearings)
- Multi-function joystick box-M2, including two levers and a speed adjustment knob
- Measuring range 120 x 120 x 80 mm
- High precision scales with 0,02 µm resolution
- UC400K controller supporting SMS functionality (Smart Measuring System)

Touch trigger probe MTP-001

Scanning probe MPP-001

MACH Ko-ga-me Models:

No.	Model	Range [mm]
357-172-10	MACH-Ko-ga-me 12128-C	120 x 120 x 80

MACH Ko-ga-me with optional stand 02AQG391UK

In-line Application example with MACH Ko-ga-me

Specifications

Accuracy	E0, MPE from: (2,4+0,57L/100) µm
Max. drive speed	340 mm/s (3-axis)
Digital step	0,02 µm

Joystick-box M2 with speed adjustment knob, standard accessory.

Mitutoyo eco-fix fixture kits:
- flexible & quick setup
- time & cost saving
- easy adaption of product changes

Refer to the INLINE Measuring systems brochure

Scan QR Code with your mobile device and watch our product videos on YouTube

All products to be sold to commercial customers.
Product illustrations are without obligation. Product descriptions, in particular any and all technical specifications, are only binding when explicitly agreed upon.

MACH-3A 653

Series 360 - High-Speed In-Line CMM

The MACH-3A 653 is a horizontal spindle type with index table coordinate measuring machine and is designed for fast and precise inline measurement. It grants outstanding throughput will allow you to boost up your measuring process. His small foot print and protection against rough production environments makes him suitable for workshop and inline production measurements.

Main benefits:

- Super High speed and acceleration
- Drastic reduction of the measurement cycle compared with any conventional CMM
- All in One Compact design to minimize the foot print in the workshop and to improve the dust resistance
- Work piece handling and routing in the same posture as for other horizontal spindle machining centres
- Control unit and PC are installed in the dust-tight rack with heat exchanger
- Ease-of-maintenance construction and air-free operation using high accuracy linear ball bearing
- Temperature compensation from 5°C to 40°C
- Glass scale with high resolution 0,1 µm
- Safety joystick box with deadman switch and speed adjustment
- UC400K controller supporting SMS functionality (Smart Measuring System)
- Optional with index table for higher flexibility

MACH-3A 653

No.	Model	Range [mm]
360-417	MACH-3A 653	600 x 500 x 280

Specifications

Accuracy	E0, MPE from: (2,2+0,35L/100) µm
Max. drive speed	1212 mm/s (3-axis)
Digital step	0,1 µm

Accuracy is specified for the following environmental conditions for the CMM

Temperature range		5°C - 40°C
Temperature change	per hour	2 K
	per 24 hours	10 K
Temperature gradient	Vertical	1 K/m
	Horizontal	1 K/m

Safety System

For this type series, Mitutoyo offers a customized safety system. Depending on the local situation in your facility, Mitutoyo will propose a tailor-made solution meeting the requirements of the Machinery Directive.

Refer to the INLINE Measuring systems brochure

Scan QR Code with your mobile device and watch our product videos on YouTube

StyliCleaner always Reliable and Clean Stylus

All products to be sold to commercial customers.
Product illustrations are without obligation. Product descriptions, in particular any and all technical specifications, are only binding when explicitly agreed upon.

MACH-V9106

Series 360 - High-Speed In-Line CMM

The MACH-V 9106 is a vertical spindle type coordinate measuring machine and is designed for fast and precise inline measurement. It grants outstanding throughput will allow you to boost up your measuring process.
His design is so chosen that work pieces can be conveyed through the CMM either in front/back or left/right. This makes it a very flexible system to integrate. Also it can provide pre/post machining feedback to your machine tools for process tuning.

Main benefits:

- Higher speed and accuracy with barycentric drive
- Improved dust resistance by installing all drive system and scale units in the dust-tight enclosure on the machine top
- Control unit and PC are installed in the dust-tight rack
- Space-saving design helps installation in a production line
- Flexible loading options due open access to the measuring area
- Ease-of-maintenance construction and air-free operation using high accuracy linear ball bearing
- Temperature compensation from 5° to 35°C
- Glass scale with high resolution 0,1 µm
- Safety joystick box with deadman switch and speed adjustment
- UC400K controller supporting SMS functionality (Smart Measuring System)

MACH-V9106

No.	Model	Accuracy	Range [mm]
360-228	MACH-V9106	E0, MPE from: (2,5+0,35L/100) µm	900 x 1000 x 600

Scan QR Code with your mobile device and watch our product videos on YouTube

Specifications

Max. drive speed	866 mm/s (3-axis)
Digital step	0,1 µm

Accuracy is specified for the following environmental conditions for the CMM

Temperature range		5°C - 35°C
Temperature change	per hour	2 K
	per 24 hours	10 K
Temperature gradient	Vertical	1 K/m
	Horizontal	1 K/m

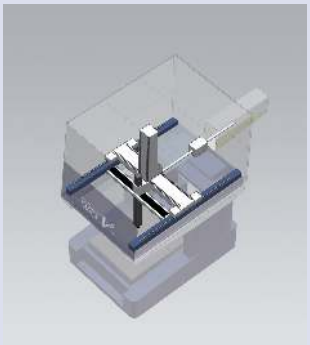

Safety System
For this type series, Mitutoyo offers a customized safety system. Depending on the local situation in your facility, Mitutoyo will propose a tailor-made solution meeting the requirements of the Machinery Directive.

Mitutoyo eco-fix fixture kits:
- flexible & quick setup
- time & cost saving
- easy adaption of product changes

StyliCleaner always Reliable and Clean Stylus

All products to be sold to commercial customers.
Product illustrations are without obligation. Product descriptions, in particular any and all technical specifications, are only binding when explicitly agreed upon.

MiSTAR 555

Specifications

Accuracy	E0, MPE from: (2,2+0,3L/100) µm
Max. drive speed	606 mm/s (3-axis)
Digital step	0,1 µm

Mitutoyo eco-fix fixture kits:
- flexible & quick setup
- time & cost saving
- easy adaption of product changes

Series 357 - Compact shop floor CNC CMM

The MiSTAR 555 is a CNC coordinate measuring machine conceived to be the "measuring machine for any environment." It comes with a wide accuracy-guaranteed temperature range, environment-resistant absolute scale, and an all-in-one space-saving design. With performance that sets it apart from conventional coordinate measuring machines, the MiSTAR 555 is guaranteed to boost your productivity

Main benefits:

- High accuracy, high speed and high acceleration
- Temperature sensors for compensation of machine and workpiece from 10° to 40°C and monitoring of the environmental temperature.
- ABS linear scales provide high environmental resistance and saves time at start-up as homing is not necessary
- New UC480 controller supporting Multi-sensor and SMS functionality (Smart Measuring System)

MiSTAR 555

Quick launcher for easy part program execution

Equipped with the PH6M probe head

Equipped with the PH10MQ probe head

No.	Model	Range [mm]
357-305	MiSTAR 555	570 x 500 x 500

All products to be sold to commercial customers.
Product illustrations are without obligation. Product descriptions, in particular any and all technical specifications, are only binding when explicitly agreed upon.

CMM Software

MiCAT Planner

The new CMM software generation for an efficient, safe and automatic CMM programming. MiCAT Planner drastically reduces the programming time and thus will make your work much more efficient! Programs will now be made within minutes where it took hours or even days before. MiCAT planner is using PMI (Product Manufacturing Information) tolerance information inside the CAD file and creates the complete part program by considering your individual measurement strategy and your specific CMM. This guarantees a collision-free program in the shortest possible time.

- Reduces programming time significantly
- Collision-free and optimized programs
- Increased availability of the measuring machine
- Flexibility in choosing the measuring machine
- Unified measurement strategies increase data quality
- Speeds up instruction of staff

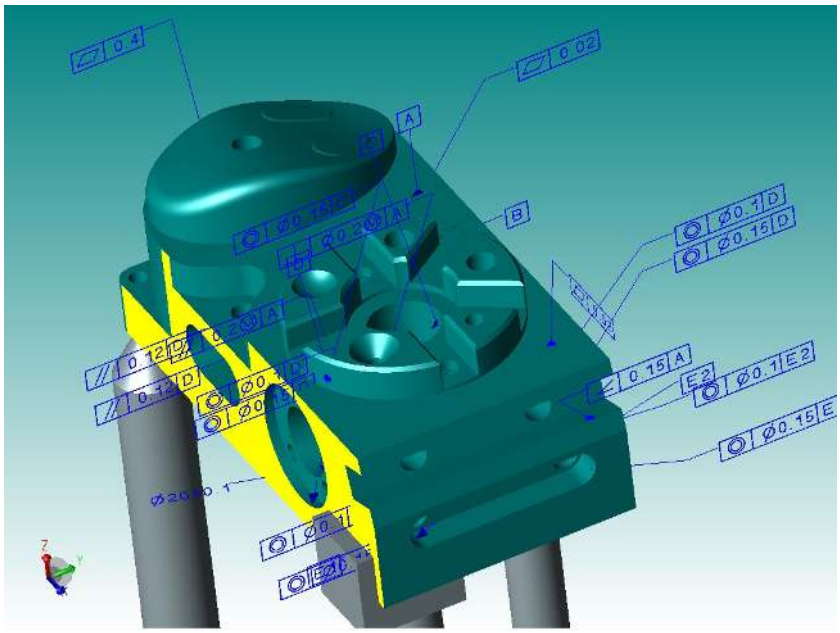

Step 1: Load the CAD model.
• Various CAD transaltors available: ACIS, STEP, CATIA V5, Pro-Engineer/CREO, Siemens NX, SolidWorks
• Add missing tolerance information

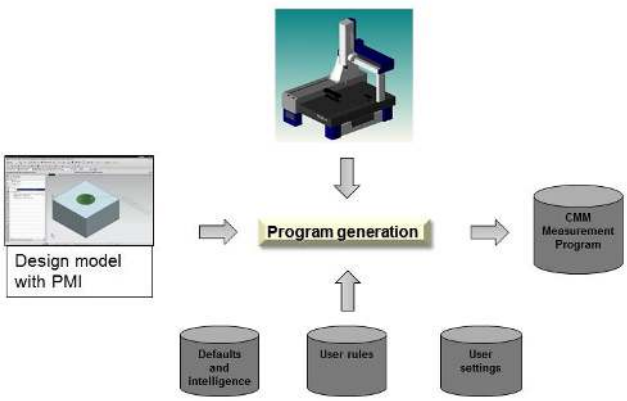

Workflow by MiCAT Planner

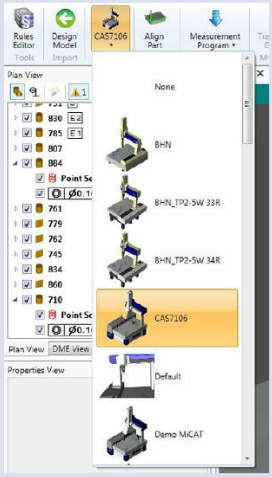

Step 2: Select the CMM

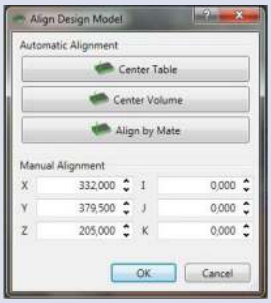

Step 3: Align CAD model

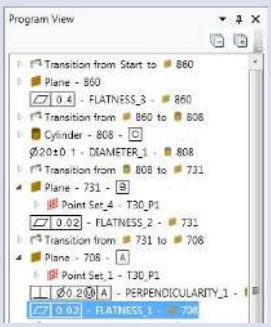

Step 4: Create the part program

Step 5: Transfer to MCOSMOS

Scan QR Code with your mobile device and watch our product videos on YouTube

All products to be sold to commercial customers.
Product illustrations are without obligation. Product descriptions, in particular any and all technical specifications, are only binding when explicitly agreed upon.

CMM Software

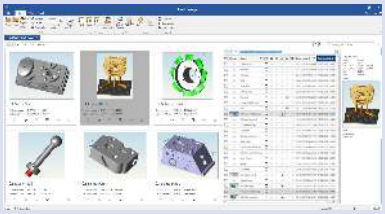

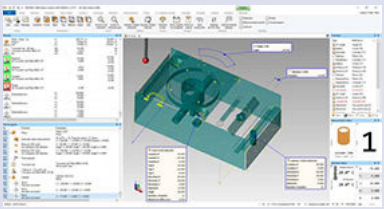

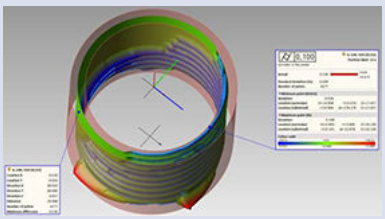

For details, please ask for the MCOSMOS brochure.

MCOSMOS - The Modular Software for all Kinds of Measurement

The heart of your CMM: to organize, execute, calculate and report.

- Organize your measurement programs on the network
- Add commands and instructions to guide the operator
- Create individual reports meeting your customer's needs
- Archive your results in formats like PDF, XLS, HTML and many other
- SPC with MeasurLink or export data to CAQ systems
- Export detected geometrical elements to CAD systems
- Revision Management for authorized usage of validated part programs as standard
- Meet the requirements of **FDA Title 21 CFR Part 11** without extra costs

The following packages are also available for Offline programming.
The so called "**Offline MCOSMOS**" packages allow you to create part programs whilst the CMM is proofing your product quality.

Software package	MCOSMOS Manual	MCOSMOS-1 Basic package	MCOSMOS-2 CAD package	MCOSMOS-3 Full package
Part Manager • System configuration • Part program handling • Data management • Create report templates	●	●	●	●
GEOPAK • On/Off-line • For prismatic elements • Operator guidance • Parametric programs	●	●	●	●
CAT1000P • CAD programming • For prismatic elements • Collision control • Incl. simulation			●	●
CAT1000S • CAD programming • Free-form inspection • Surface + edge points • Grahical Reports			●	●
SCANPAK • For 2D contours • Evaluate + manipulate • Graphical Reports • Data exchange to CAD + NC				●

Additional software packages meeting your needs:

MeasurLink:
SPC software with certified AQDEF interface. Allows you to collect data from different vendors and devices. Its database offers collecting and analyzing data from all over the world, analyse your process and create individual reports.

GEARPAK:
Turn your CMM into a gear measurement device! Extend your capabilities, measure gears, worm gears, helical gears. Just input the gear parameters - the rest will be done by GEARPAK: measurement strategy, path generation, probe changes, and of course the measurement report of your gear.

ROUNDPAK-CMM
Special evaluation tool for scanning measurements typically known from form measurement instruments. Topographic views and evaluation of form and position deviations.

All products to be sold to commercial customers.
Product illustrations are without obligation. Product descriptions, in particular any and all technical specifications, are only binding when explicitly agreed upon.

Mitutoyo

CMM Software

MAFIS Express - Rapid Air Foil Inspection Software

Mitutoyo introduces the fastest way for inspecting blades and blisks: MAFIS Express.

- Increases your throughput by time savings up to 90%
- Intuitive programming and easy handling
- For many kinds of airfoils like blades, blisks, gas turbines
- Easy Off-line programming on the CAD model
- Individual setting of the inspection routine: measure all or just some dedicated intersections
- Support of standards set by Rolls-Royce®, P&W, Siemens®, GE®, Honeywell®, SNECMA, Turbomeca® and others
- Ideal with the Revo® or SP25M probe heads

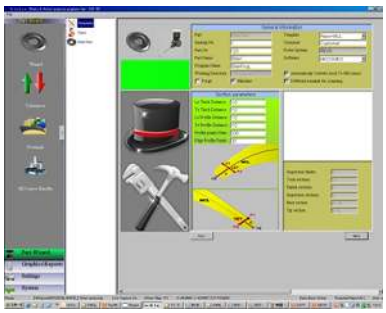

MAFIS Express

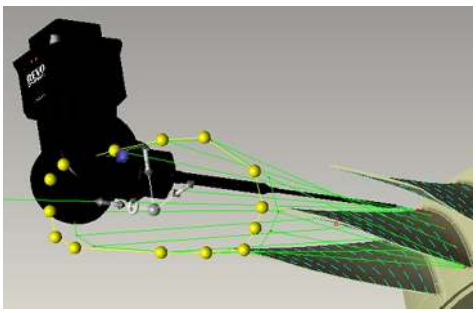

Setting intersections on the CAD model

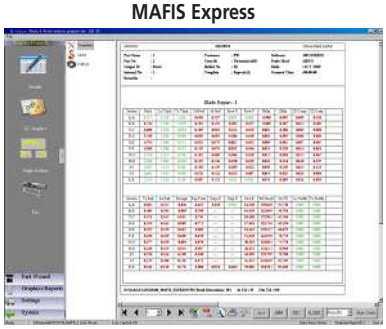

Numerical evaluation

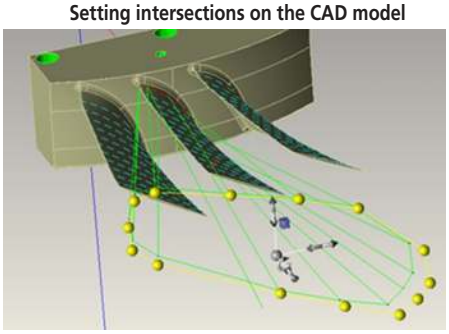

Optimizing the probe path

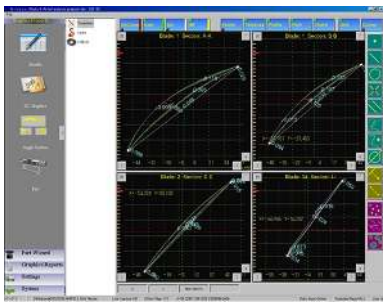

Graphical evaluation

Take a look how quick air foils are inspected by MAFIS Express

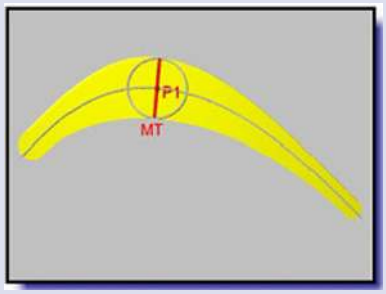

Maximum thickness

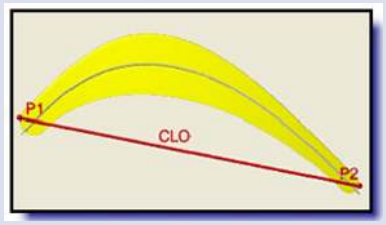

Overall Chord Length

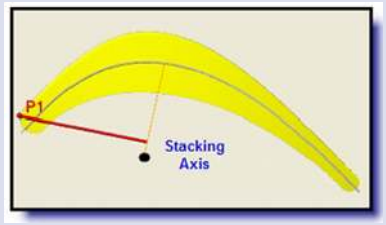

Stacking Axis

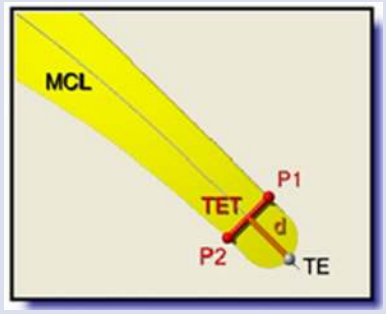

Trailing Edge – thickness on specific distance

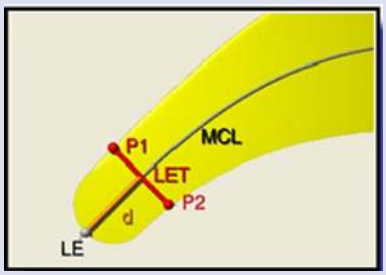

Leading Edge – thickness on specific distance

All products to be sold to commercial customers.
Product illustrations are without obligation. Product descriptions, in particular any and all technical specifications, are only binding when explicitly agreed upon.

CMM Software

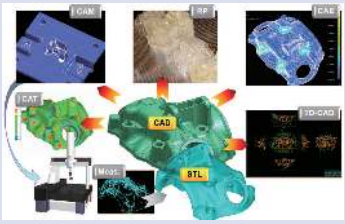

Screen sample from MSURF-S/I

Point Cloud Processing Software for Coordinate Measuring Machines MSURF

MSURF-S

Calculates point cloud data measured by CNC CMM with SurfaceMeasure. It generates scanning paths by defining the scanning start position, length, and width.

- Scanning paths can be created by simply defining three items : the scanning starting point, the scanning length, and the scanning width
- Scanning paths can be stored as measurement macros
- Point cloud data obtained from scanning can be exported in text or STL format
- MSURF-S can be started from MCOSMOS

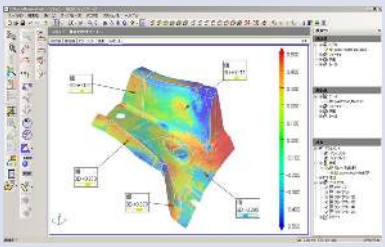

MSURF-I

Conducts analysis or comparison verification of measured point cloud data in reference to nominal data (supporting CAD data import).

- Importing CAD data
- Feature-by-feature comparison
- Comparison of cross-sectional shapes

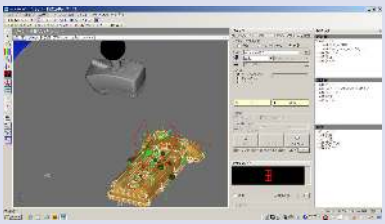

MSURF Planner

is software to automatically create measurement macros (surface form, feature form) for the line laser probe from 3D CAD data.
Optimized data (travel path, number of probe head revolutions, etc.) of a measurement path will contribute to improvements in productivity.

- Automatic scanning path programming.
- Automatic path generation for surface or feature extraction
- Mirroring function

MSURF-G

Off-line version for part program generation

- Semi-automatic function for creating measurement paths with optimum probe orientation
- Detection of collision between the probe and the workpiece model
- Generation of simulated data for the point cloud expected to be obtained through scanning
- Displaying measurement movements (scanner movements) in animation

All products to be sold to commercial customers.
Product illustrations are without obligation. Product descriptions, in particular any and all technical specifications, are only binding when explicitly agreed upon.

Mitutoyo

CMM Software

GEARPAK-Express

Gear Measurement and Evaluation software for cylindrical gears

Main features:

- A 3D model created from the provided gear specifications enables an easy visual check of the measurement strategy.
- Automatic program creation and on-screen measurement guidance help quick and easy setting of the coordinate system.
- "4-Axis nominal scanning" using an optional rotary table, makes scanning even faster. Depending on the size and accuracy class of the gear, the measurement time can be reduced up to 50% compared to conventional methods.
- The real-time display of the measurement result and tolerance judgment result enables early detection of non-conforming product.
- Performs dimensional measurement and geometrical tolerance evaluation without changing the setup during gear evaluation.

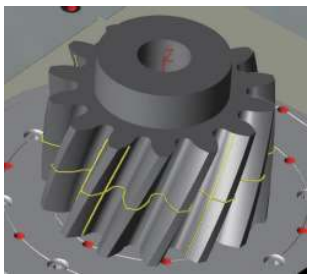

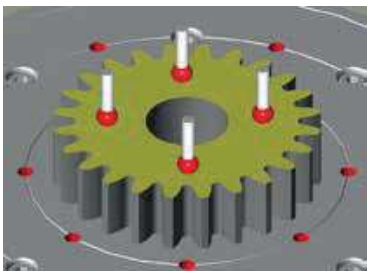

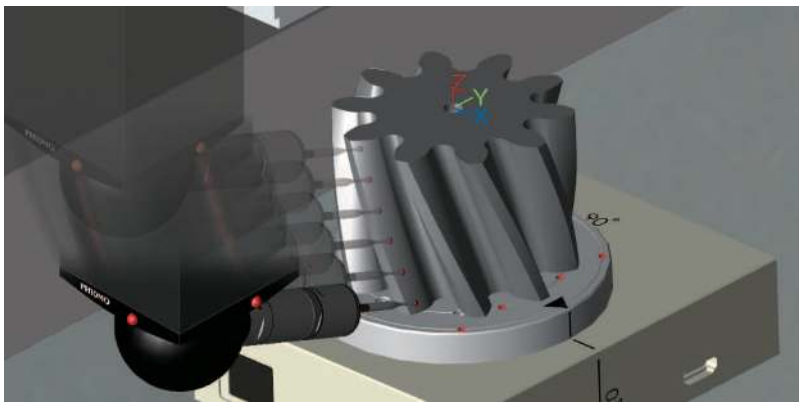

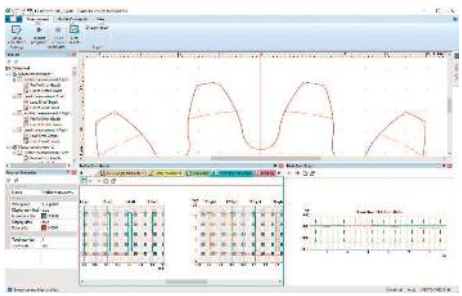

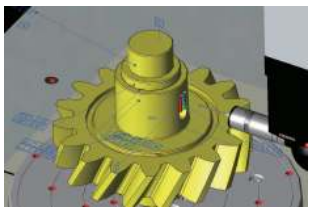

All products to be sold to commercial customers.
Product illustrations are without obligation. Product descriptions, in particular any and all technical specifications, are only binding when explicitly agreed upon.

CMM Probes

SurfaceMeasure

Measurement of color sample plate

Measurement of glossy parts

The flying spot type is capable of scanning difficult parts, such as this impeller, precisely and achieves highest scanning accuracy in the class.

Ultra-high speed data collection

SurfaceMeasure is a laser probe that collects coordinate values of the surface of the workpiece by moving and irradiating laser light over the workpiece.

Advantages of non-contact type

Non-contact measurement enables measurement of materials that can be easily-deformed by contact measurement, including resin or thin, elastic parts.

Powder-less measurement

Automatic configuration of the camera sensitivity and the laser intensity settings according to the environment and materials enable establishing a simple and comfortable laser-scanning environment since measurement is now powder and spray free.

Evaluation cases

The collected point cloud data can be used by various optional software in a wide range of applications, such as editing, plane creation, comparison using CAD data and

SM 403

SM 1110

SM 201FS

No.	Model	Max. scan width	Max. scan depth	Scanning error	Max. Acquisition rate	Line Laser	Point Laser
02AQJ500	SM 201FS	23 mm	15 mm	1,8 µm	25000 points/sec		Wave length: 670 nm Power output: 1mW
02AQK010	SM 1110	110 mm	100 mm	9 µm	300000 points/sec	Wave length: 660 nm Power output: 2,5mW	
02AQH290	SM 403	40 mm	30 mm	8 µm	60000 points/sec	Wave length: 660 nm Power output: 4mW	

All products to be sold to commercial customers.
Product illustrations are without obligation. Product descriptions, in particular any and all technical specifications, are only binding when explicitly agreed upon.

CMM Probes

SURFTEST Probe

Surface Roughness Measurement directly on the CMM!

This Mitutoyo sensor head closes the gap between typical dimensional CMM measurements and surface roughness inspection. Instead of having to take the workpiece to another measuring instrument or using additional portable systems, the SURFTEST Probe adds roughness measurement capability to your CMM and so avoids all the cost and inconvenience of additional systems. It brings the proven technology of the SJ-310 series to the CMM with all its highly capable range of detectors developed for handling specialist applications such as roughness measurement on gears, inside small holes or deep grooves, in addition to simple flat surface measuring tasks.

Main benefits:

- Proven technology from Mitutoyo's SJ-310 Surftest
- Chose from five types of detector for variant applications
- High accuracy – no CMM movement during measurement
- One CNC measurement cycle produces all results
- Graphical and numerical output
- One Measurement report for all GD&T requirements

No.	Model	Comments
06AEN891	SURFTEST Probe kit	For PH10M/MQ mount
06AFE255	SURFPAK-SP software	Necessary option
178-270	Detector 0,75mN, 60° R2µm	Optional accessory*
178-280	Detector 4mN, 90° R5µm	Optional accessory*

* Chose at least one of these options

SURFTEST Probe

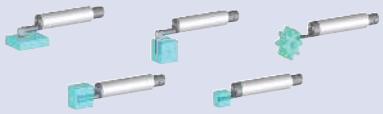

Optional detectors

All products to be sold to commercial customers.
Product illustrations are without obligation. Product descriptions, in particular any and all technical specifications, are only binding when explicitly agreed upon.

CMM Probes

QVP

Mitutoyo's Vision Probe System for CMMs

The Quick Vision Probe will make from your CMM an VMM (VisionMM). Put in an probe change rack you can use it together with other probes. Were traditional probes can not be used, very small holes and flexible parts, the QVP can do this Job.

- Fast optical measurements – the perfect choice for small features and soft materials
- Ideal in combination with tactile probes
- Prepared for automatic probe change
- Four objective lenses offer different optical magnification
- From 0,375 x to 3,75 x
- White LED ring light
- White LED coaxial light

QVP (Quick Vision Probe)

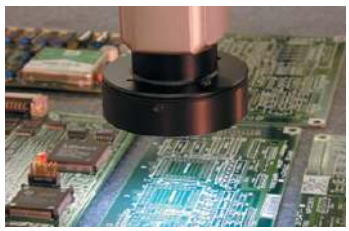

ML objective lenses

Calibration gauge

Pixel calibration chart

No.	Functions		
	No.	Model	Comments
QVP-System	359-051-7	Vision probe incl. ML 3X objective lens	
	375-036-2	ML 1X objective lens	Optional accessory
	375-034-1	ML 5X objective lens	Optional accessory
	375-039	ML 10X objective lens	Optional accessory
	02AQC310	Calibration gauge	Necessary accessory
	02AKN020	Pixel calibration chart	Necessary accessory
	02NBA621	Visionpak software	Necessary option

All products to be sold to commercial customers.
Product illustrations are without obligation. Product descriptions, in particular any and all technical specifications, are only binding when explicitly agreed upon.

Mitutoyo

CMM Probes

MPP-310Q

Ultra-High accuracy and low measuring force Scanning Probe

This ultra-high precision scanning probe incorporates built-in XYZ scales for highest accuracy performance.
The compact size of this probe is ideal for low measuring force and high speed scanning.
Data collection can be performed by scanning measurement, ultrahigh precision point measurement and center alignment measurement.
Special developed for our Ultra-High accuracy CMM

- High resolution of 0,01 µm
- Measuring range ±1 mm
- Extremely low measuring forces of 0,03 N
- Styli length up to 200 mm
- Air bearing for smooth measurements
- Axis clamping for scanning on slanted or arched surfaces

MPP-310Q

Mitutoyo Touch probes for MACH-Ko-ga-me Generation C

MPP-001 and **MTP-001** are touch probe systems dedicated for MACH Ko-ga-me generation C. Both the MPP-001 scanning probe and MTP-001 touch trigger probe, adopt digital bi-directional communication for higher noise reduction than that of conventional analog probes, which is especially beneficial when used in shop floor conditions with MACH Ko-ga-me.

MACH Ko-ga-me with mounted MPP-001 scanning probe

MPP-001 Scanning probe (M3 styli mount)

Touch trigger probe MTP-001

Scanning probe MPP-001

MTP-001 Touch trigger probe (M2 styli mount)

All products to be sold to commercial customers.
Product illustrations are without obligation. Product descriptions, in particular any and all technical specifications, are only binding when explicitly agreed upon.

CMM Probes

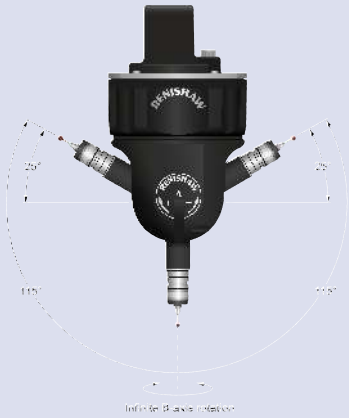

PH20

Rapid tactile measurements at any probe angle

- Head touch for improved repeatability
- Feature-based calibration for improved accuracy
- Automatic stylus change with TP20 modules and optional TCR20 change rack
- Allowing subsequent measurement at any head angle
- Full support in MCOSMOS and MiCAT Planner
- 5-axis control on CMM's with UC400 / 480 controller and PHC20 interface

Revo

Revo

5-axis measurement technology

- Rapid scanning at any angle
- Dynamic 2-axis head provides most of the stylus motion
- High accuracy and repeatability
- Scanning with 5-axes of simultaneous motion allows unparalleled measurement flexibility
- 'Head-touches' take measurement points faster, with improved accuracy and repeatability
- 5-axis motion eliminates time spent indexing the head
- Supports stylus lengths up to 500 mm

Refer to the Measuring Heads brochure

Scan QR Code with your mobile device and watch our product videos on YouTube

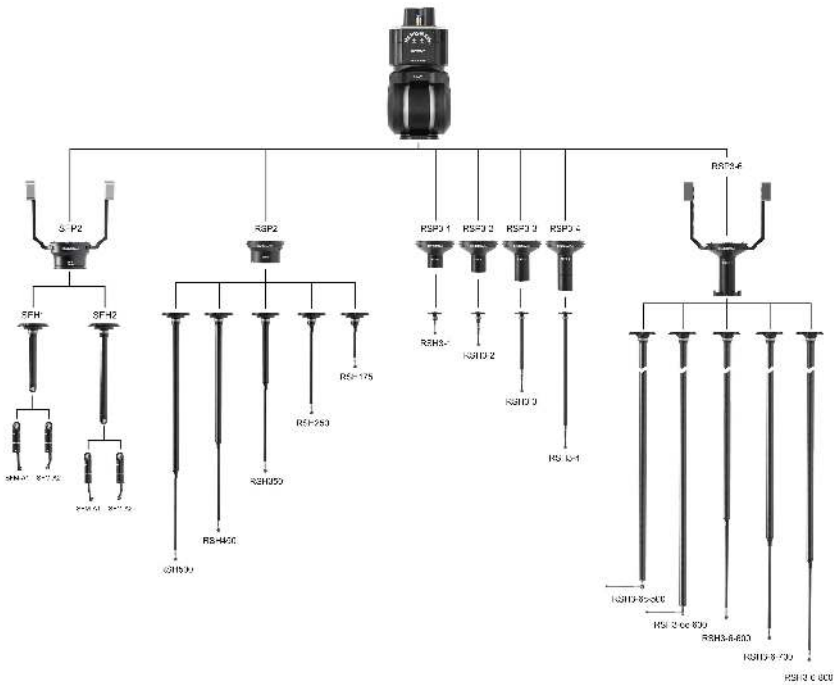

All products to be sold to commercial customers.
Product illustrations are without obligation. Product descriptions, in particular any and all technical specifications, are only binding when explicitly agreed upon.

Mitutoyo

CMM Probes

Scanning probe systems

Scanning probes can acquire several hundred surface points each second, enabling measurement of form as well as size and position.
Scanning probes can also be used to acquire discrete points in a similar way to touch-trigger probes.
A range of solutions is available, suitable for all sizes and configurations of CMM.

SP80
is a quill-mounted scanning probe that uses digital scale and readhead technology, to provide exceptional scanning performance, even with long styli.

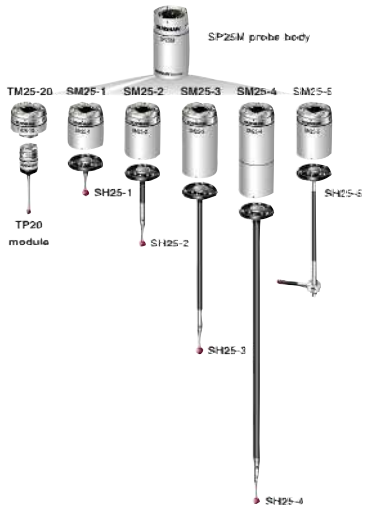

SP25M
At just 25 mm in diameter, the SP25M is small and light, making it ideally suited to mounting on articulating heads. It is also sufficiently compact to suit small CMM's

SP600
Renishaw's SP600 analogue scanning probe offers high-performance inspection, digitizing and profile scanning capability for a wide range of CMM's.

Touch-trigger probe systems

TP7M
High accuracy type

TP200
Compact and high accuracy (stylus change type)

TP20
Compact type

Probe heads with integrated Probe system.

MH20i
Manual Probe

Probe heads

PH10MQ
Motor drive index type

MIH
Manual index type

PH1
Simple manual type

CMM Probes brochure on demand

All products to be sold to commercial customers.
Product illustrations are without obligation. Product descriptions, in particular any and all technical specifications, are only binding when explicitly agreed upon.

CMM Probes

Change Racks

MCR20 rack for use with TP20 probe

SCR200 rack for use with TP200 probe

TCR20 rack for use with PH20 probe

SCR600 rack for use with SP600 probe

FCR25 rack for use with SP25M probe

Modular Rack Systems

MRS system with optional ACR3-4 and FCR stylus modules

MRS2 single system and with additional front and back Rail

Modules for Modular Rack System

ACR3-4 passive 4 port probe changer

FCR25 for SP25M

SCP600 for SP600

RCP2 for REVO

RCP TC2 for REVO

All products to be sold to commercial customers.
Product illustrations are without obligation. Product descriptions, in particular any and all technical specifications, are only binding when explicitly agreed upon.

Mitutoyo

Styli

CMM Styli

As the interface between measurement system and workpiece, the stylus is a keyplayer in coordinate measurement.
It has to fulfil the highest quality requirements to suit its task.

- By contact of the stylus tip with the workpiece, a probing sensor determines the geometrical position of the contactpoint in the X, Y and Z axes and feeds it back to the controller unit and CMM software.
- Touch point and scanning probe systems define the specification of the stylus.
- To build perfect styli that suit this specification, properties like stiffness (modulus of elasticity), thermal expansion, weight and sphericity of the ball have to be taken in consideration.

Mitutoyo styli are made to the highest standards to ensure maximum quality and performance. Precision machined components made from the finest quality materials and Grade 5 (DIN 5401:2002) styli balls set the base for high accuracy CMM measurement.

Longstanding experiece and expertise are used to craft our styli product range with a passion right in the heart of Germany.

Ball material properties:

Ruby
Ruby, as the hardest of all stylus tip materials, is the perfect choice for most applications.. Because of the adhesive material build up, the scanning of aluminium surfaces with ruby tips is not recommended.

Silicon nitride
Silicon nitride is extremely hard and superbly wear resistant, with the least surface roughness of all ball materials, which makes it highly applicable for most scan applications.
Silicon nitride does not attract aluminium particles when scanning aluminium workpiece surfaces.

Zirconium oxide
Because of the specific surface properties of contact points made of zirconium oxide - a ceramic compound with high wear resistance – they are acknowledged as the best choice for the scanning of abrasive surfaces, such as workpieces made of cast iron. Zirconium oxide provides a smooth and frictionless sliding performance on rough surfaces.

Diamond coating
Diamond coated silicon nitride balls are true allrounders, made to suit all applications and to last long.
Due to their durability, they posses an excellent price performance ratio.

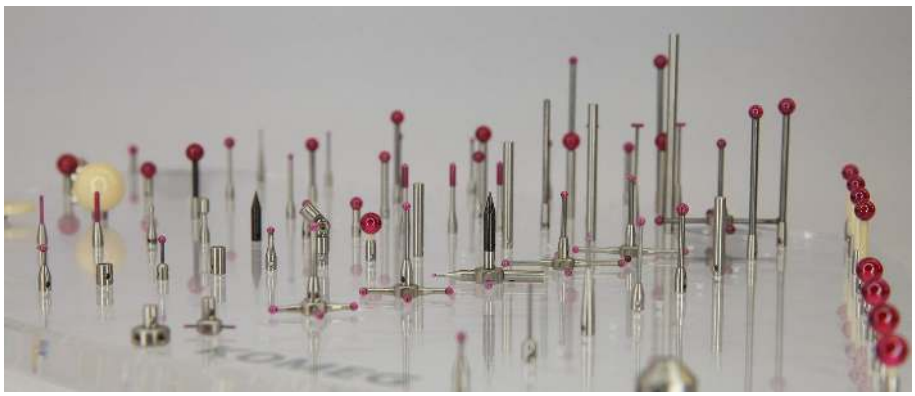

Custom styli
We are waiting to receive your custom stylus request if you cannot find what you are looking for. Please contact your local Mitutoyo sales team. And benefit from our long standing experience.

Scan QR code to see all Styli and Accessories.

All products to be sold to commercial customers.
Product illustrations are without obligation. Product descriptions, in particular any and all technical specifications, are only binding when explicitly agreed upon.

Styli Kits

Styli Kits

Preconfigured styli kits are available for the initial equipment or to suit different application or probe requirements.

Please refer to our webshop and styli brochure for the best overview of available kits, single styli and accessories.

Our steadily increasing product range will provide the best styli for your application.

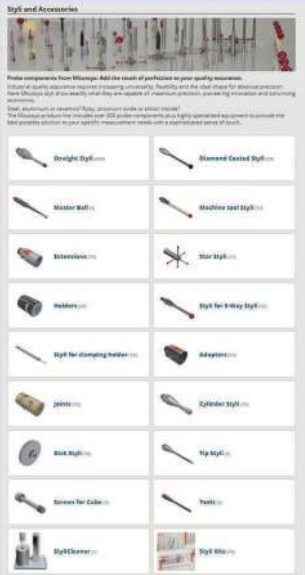

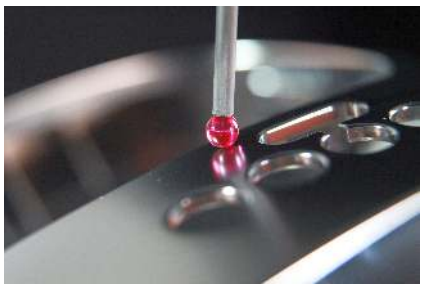

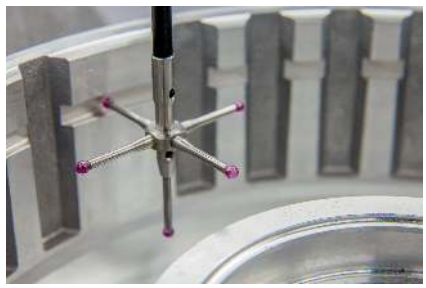

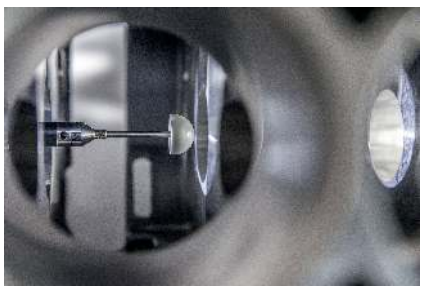

Scan QR-Code to see all Styli Kits.

All products to be sold to commercial customers.
Product illustrations are without obligation. Product descriptions, in particular any and all technical specifications, are only binding when explicitly agreed upon.

Fixtures

eco-rail CMM fixtures Series

The Mitutoyo eco-fix rail system defines flexibility in modular CMM fixturing. Guide rails can be mounted on the CMM in next to no time. By sliding the base elements with the integrated build-up components already attached, the stepless on-rail positioning assures an ultra-fast setup of fixturing positions. The basic kit K551279 features all required components for a three-point setup with secure positioning via spring clamping.
Footprint: 800 mm x 500 mm

The full compatibility of the eco-fix and eco-fix plus product ranges enable the extension of the fixturing setup at any time and additionally increases performance and flexibility. Mitutoyo fixture equipment has been designed and manufactured in Germany for over 35 years with uncompromising precision in mind.

Choosing Mitutoyo is clear when it comes to fixture systems thanks to their essential aspects of universality, flexibility, and efficiency.

All products to be sold to commercial customers.
Product illustrations are without obligation. Product descriptions, in particular any and all technical specifications, are only binding when explicitly agreed upon.

CMM Fixtures

Workpiece set up on eco-fix base plate

Fixtures leaflet PRE 1403

Fixturing kits

Mitutoyo eco-fix CMM fixtures Series – Experience in Accuracy

Mitutoyo fixture kits series "eco-fix" is a very fast and affordable solution to get workpieces clamped on the measuring machine. In just a few minutes, your fixture is ready for measurement. Therefore, eco-fix is a very attractive alternative to customised jigs.
The modular clamping system for CMM and form measuring machines, eco-fix, allows relaxed working in many ways. For the first time, functions and colours are conjoint in a practice-oriented concept for time-saving economical working and confusion- proof handling.

Clear optical differentiation of elements by colour
- Black: base plate
- Violet: brackets
- Orange: build up components
- Silver: Top pieces for workpiece support

All products to be sold to commercial customers.
Product illustrations are without obligation. Product descriptions, in particular any and all technical specifications, are only binding when explicitly agreed upon.

CMM Fixtures

eco-fix kits avalable in many configurations.

Pallet receiver base and handles

Eco-fix storage rack with fixtured workpieces

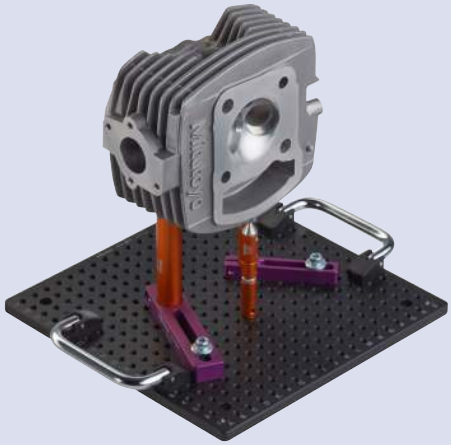

All products to be sold to commercial customers.
Product illustrations are without obligation. Product descriptions, in particular any and all technical specifications, are only binding when explicitly agreed upon.

CMM Fixtures

Scan the QR-Code to see all eco^{fix} kits.

eco-fix^{plus} CMM fixtures Series

A new contestant has entered the modular fixturing world: **eco-fix^{plus}**

- The new fixturing system, made of solid and rigid steel components, is made for heavy and big workpieces.
- It significantly reduces the requirement for custom made solutions due to weight and dimension.
- Repeatable set-up configuration and high durability are only some of the product ranges advantages.
- M6 threading ensures full compatibility with eco-fix components and our **multiflex^{profile}** series.
- The combination with our profile frame series adds utmost flexibility for the fixturing of even bigger components.

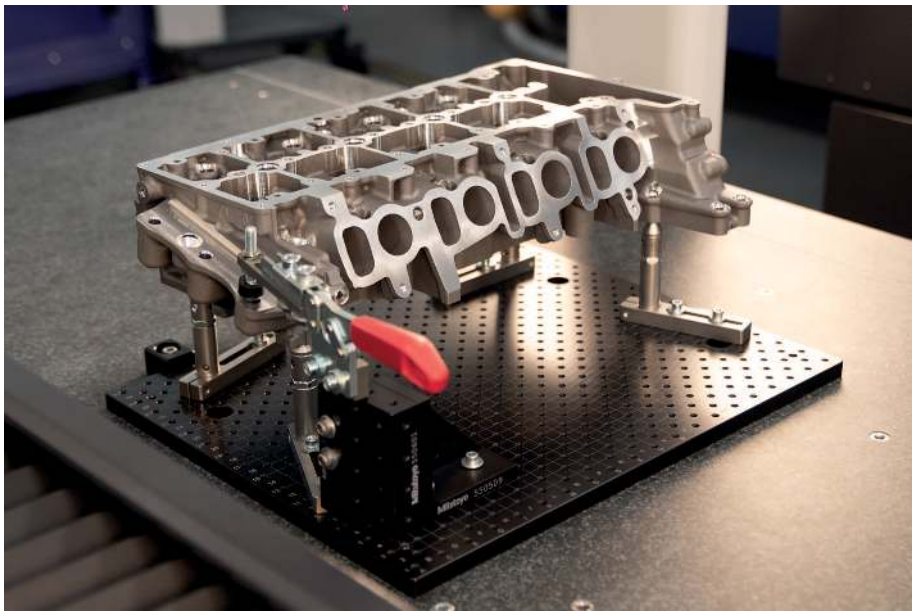

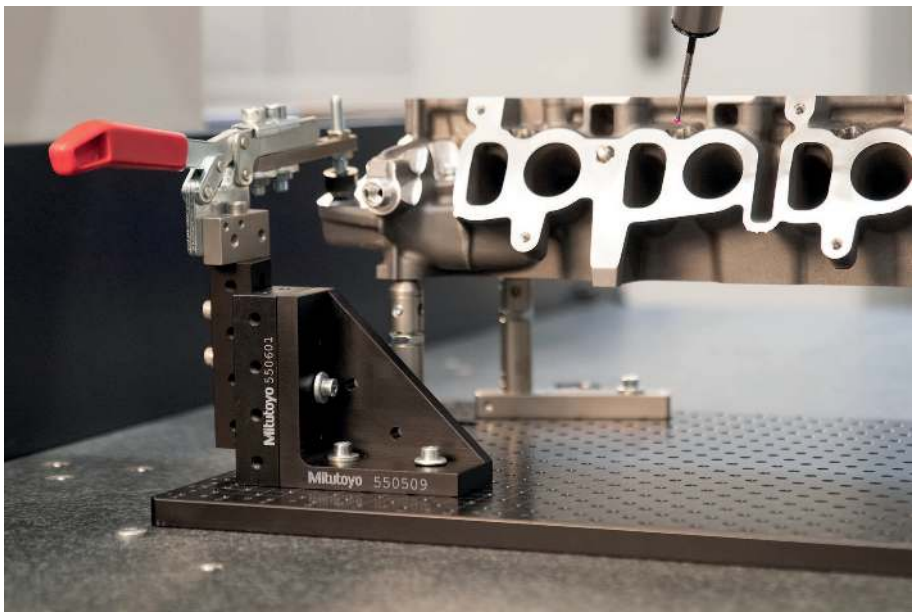

All products to be sold to commercial customers.
Product illustrations are without obligation. Product descriptions, in particular any and all technical specifications, are only binding when explicitly agreed upon.

CMM Fixtures

multiflex^{profile} CMM fixtures Series

The multiflexprofile series provides base and build-up components for parts that are too big for the eco-fix base plates.

The profile line-up comprises of 3 different variants:

- multiflex^{profile} rails are half dovetail profiles for direct mounting of basic frames on the CMM granite.
- The economic multiflex^{profile} frames is used for generating the basic frame. It features dovetail and T-nut profiles.
- The actual mutiflex^{profiles} feature an additional grid system, that together with positioning pins provide secure fixation of build up plates and slider components.

Apart from our off the peg profiles, custom lengths are available by inquiry.

Slider elements, including the height adjustable vari-fix columns, can be positioned freely on the frame structure. In combination with eco-fix and eco-fixplus fixturing components, the highest fixturing flexibility and capability for any modular fixturing range is achieved.

Advantages of vari-fix columns:

- fully height-adjustable
- rotative parts allow 360° positioning
- combinable with all eco-fix parts

Vari-fix column

multiflex^{profile} rail

multiflex^{profile} frame

multiflex^{profile}

Slider element

All products to be sold to commercial customers.
Product illustrations are without obligation. Product descriptions, in particular any and all technical specifications, are only binding when explicitly agreed upon.

CMM Fixtures

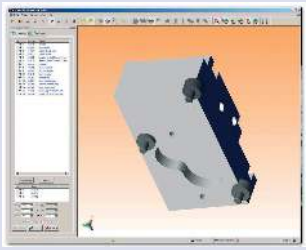

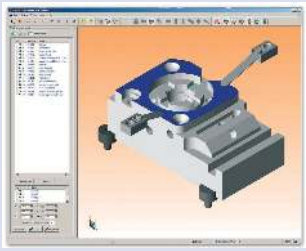

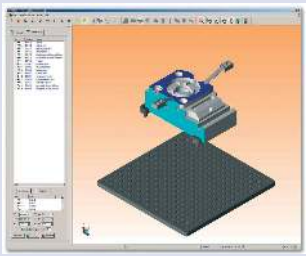

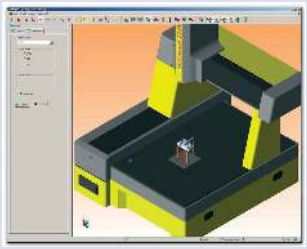

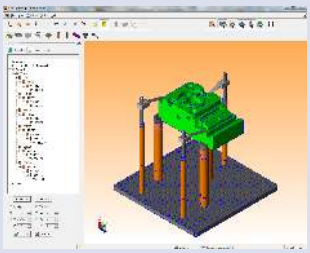

Fixturing kits

FixtureBuilder Software

The free of charge software FixtureBuilder enables the user to easily plan and set up his CMM fixture in just a few minutes. Repeatable fixturing has never been easier and at a better price performance ratio.

"FixtureBuilder" is a software tool that allows users to create virtual clamping fixtures quickly and easily. Users can choose whether to set the virtual fixture up manually or to allow the software's "AutoMode" to perform the task.

The interactive "AutoMode" operating mode guides the user step by to step to a finalized clamping fixture. Only very few data need to be input, for example the choice of component to be clamped or the position and type of contact and tensioning points. This data is sufficient to enable FixtureBuilder to independently create a complete clamping fixture.

- Fixture building by mouse click
- Ideal for online programming
- Parts list with material overview
- Documented structure
- Automatic weight determination
- allows data to be imported in Acis (*.sat), Iges (*.igs) and Step (*.stp) formats

FixtureBuilder software allows data to be imported in Acis (*.sat), Iges (*.igs) and Step (*.stp) formats The export functions it offers include Hoops file (*.hsf), Autodesk (*.dwf), 3d PDF (*.pdf) and Acis Files (*.sat). Integrated into Mitutoyo's MCOSMOS CMM software, FixtureBuilder allows data to be processed in all MCOSMOS import formats. The fixture design can be imported into the measuring software, either on its own or complete with component, and thus be used for offline programming of the coordinate measuring machine.

A parts list with assembly instructions is available in various output formats for the assembly of the real fixture created in FixtureBuilder. The 3-D function in PDF format is especially practical as it allows limitless variations on the view of the fixture model in the PDF document. The virtual design can therefore be examined from all possible views and positions.

All products to be sold to commercial customers.
Product illustrations are without obligation. Product descriptions, in particular any and all technical specifications, are only binding when explicitly agreed upon.

CMM Enclosures

Protect your investment for contamination, improve reliability of measurements and reduce maintenance costs. Mitutoyo's Inspection Enclosures are designed to help keep your CMMs and instruments free of airborne contamination.

Features and benefits:
- Standard fans create positive pressure inside the enclosure to exclude airborne contaminants, increase reliability of measurements and reduce CMM maintenance costs.
- Air-conditioning option is available to add temperature control to the clean air environment.
- Enclosed volume provides greatly improved working conditions for intricate inspection operations.
- Double doors fold back enabling easy access for part loading.
- Modular Design with removable panels enables easy construction around existing machines, straightforward relocation (if required) and assists in annual CMM servicing.
- Enclosures are robustly built to whitstand the demands of a busy shopfloor manufacturing facility.
- Transparent, polycarbonate, easy-clean panels pass sufficient light for normal use and are shatterproof, tough and durable.
- Clean, functional design enhances the appearance of your CMMs.

Technical details:
- Framework fabricated from extruded aluminium.
- Lower panels made from PVC - available in a variety of colours
- Upper panels in clear polycarbonate.

All products to be sold to commercial customers.
Product illustrations are without obligation. Product descriptions, in particular any and all technical specifications, are only binding when explicitly agreed upon.

Manual 2D Vision Measuring Systems Quick Image
Page 598

Manual 3D Vision Measuring Systems Quick Scope
Page 600

3D CNC Vision Measuring Systems Quick Vision
Page 602

3D CNC Multisensor Measuring Systems Quick Vision
Page 608

MiScan Vision System
Page 611

3D CNC Measuring Systems for Micro Geometries
Page 612

Software for Quick Vision Systems
Page 614

Accessories for Vision Systems
Page 616

All products to be sold to commercial customers.
Product illustrations are without obligation. Product descriptions, in particular any and all technical specifications, are only binding when explicitly agreed upon.

Mitutoyo

Quick Image

The ultimate in simple operation with **one click measurement.**
This non-contact 2D vision measuring system brings you a new concept in 2D vision measuring instruments. It offers several unique features to improve the efficiency of your measurements, including:

- Large depth of field and wide field of view.
- Double telecentric optical system.
- 3 megapixels colour camera.
- 4-quadrant LED ring light.
- Motorized stage models provide highest measurement efficiency.

QI-A 4020D

QI-C 2017D

QI-A models, 0.2x Magnification, Manual stage

No.	Model	Travelling range X-, Y-axis [mm]	Travelling range Z-axis [mm]
361-850A	QI-A1010D	100 x 100	100
361-851A	QI-A2010D	200 x 100	100
361-852A	QI-A2017D	200 x 170	100
361-853A	QI-A3017D	300 x 170	100
361-854A	QI-A4020D	400 x 200	100

QI-B models, 0,5x Magnification, Manual stage

No.	Model	Travelling range X-, Y-axis [mm]	Travelling range Z-axis [mm]
361-855A	QI-B1010D	100 x 100	100
361-856A	QI-B2010D	200 x 100	100
361-857A	QI-B2017D	200 x 170	100
361-858A	QI-B3017D	300 x 170	100
361-859A	QI-B4020D	400 x 200	100

QI-C models, 0,2x Magnification, Motorized stage

No.	Model	Travelling range X-, Y-axis [mm]	Travelling range Z-axis [mm]
361-860A	QI-C2010D	200 x 100	100
361-861A	QI-C2017D	200 x 170	100
361-862A	QI-C3017D	300 x 170	100

Specifications

Measuring Mode	High-resolution mode and Normal mode
Optical system working distance	90 mm
Optical system depth of focus	**High-resolution mode** : ±0,6 mm (QI-A, QI-B and QI-C) **Normal mode** : ±11 mm (QI-A and QI-C) ±1,8 mm (QI-B)
Accuracy [1]	$E_{1(x,y)}$ = ±(3,5+0,02L) µm **L** = measured length (mm) [1]According to Mitutoyo inspection method
Optical system magnification	**QI-A and QI-C models** : 0,2X **QI-B models** : 0,5X
CCD camera	3 megapixels colour CCD camera
Illumination	- Contour: White LED - Coaxial: White LED - 4-quadrant white LED ring light

Optional accessories

No.	Description
12AAJ088.	Reinforced footswitch

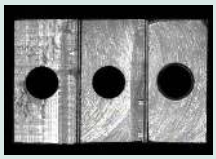

Image of a stepped block using the double telecentric objective showing the orthographic view produced.

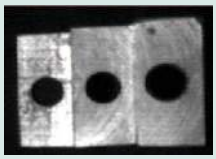

Image of the same object using a standard objective

Refer to the Quick Image brochure

All products to be sold to commercial customers.
Product illustrations are without obligation. Product descriptions, in particular any and all technical specifications, are only binding when explicitly agreed upon.

Software for Quick Image Systems

QIPAK

- One click measurement with QUICK GO / NG decision
- Single mouse-click edge-detection tools; very easy to use.
- Template tools for comparative analysis.
- Video image capture.
- Stage navigation function gives improved measurement cycles.
- Image stitching provides wide area measurement.

No.	Type
QIPAK	Software for Quick Image Systems

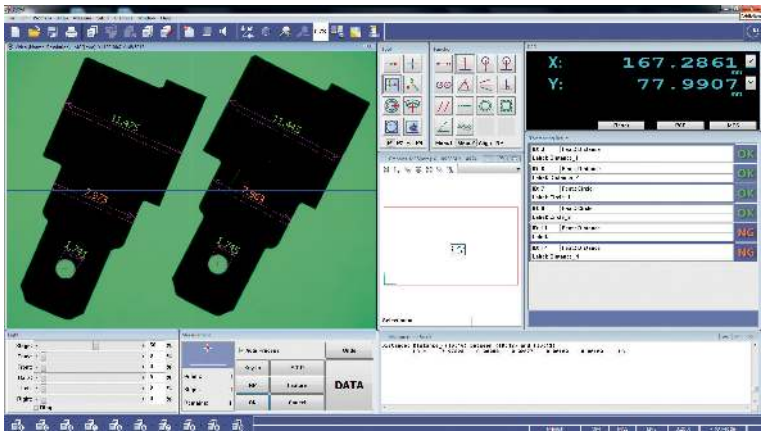

QIPAK screen layout in pro mode

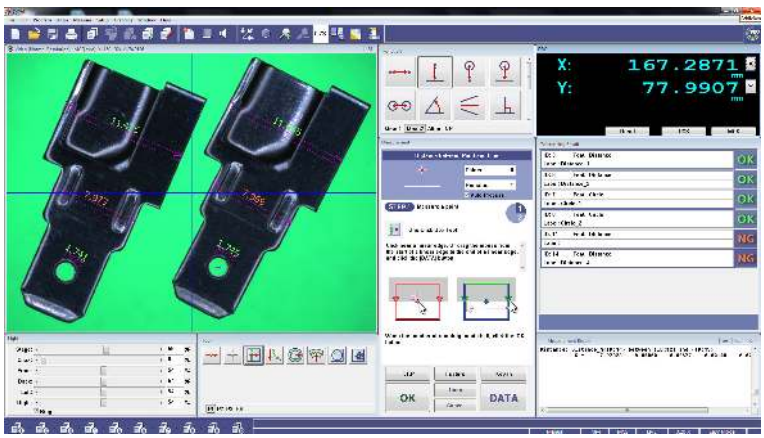

QIPAK screen layout in easy mode

Specifications

QIPAK Additional software (optional)	MEASURLINK (refer to the Measurlink page) QS CAD-IMPORT/EXPORT FORMTRACEPAK-AP (1)

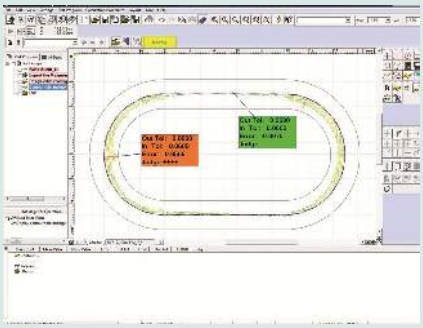

(1) FORMTRACEPAK-AP

Simple and easy-to-use 2D contour analysis.
Graphic reports (geometry or scanning) edition.
Allows measurement by comparison.
For more information refer to FORMTRACEPAK-AP.

All products to be sold to commercial customers.
Product illustrations are without obligation. Product descriptions, in particular any and all technical specifications, are only binding when explicitly agreed upon.

Mitutoyo

Manual Quick Scope QS-L

This manual vision measuring system is an excellent surface observation system which you can use on a wide variety of workpieces.
The Quick Scope offers you the following benefits:

- 0,1 µm resolution and 150 mm Z-axis range.
- Power zoom enabling you to change magnification change quickly and easily.
- Fine illumination capability enabling you to change lighting to match your workpiece requirements.
- A quick release system on the stage, so you can switch instantly between coarse and fine movement.
- Quick navigation function allowing you to repeat measurements quickly.
- Motorized Z-axis enables fast and accurate Auto Focus.

QS-L Z/AFC models

No.	Model	Travelling range X-, Y-axis [mm]	Travelling range Z-axis [mm]	Magnification (optical system)	Z-axis measurement	Max. stage loading [[kg]]
359-713-10	QS-L2010Z/AFC	200 x 100	150	0,75X -> 5,25X with 1,5X objective	Motorized with AF	10
359-714-10	QS-L3017Z/AFC	300 x 170	150	0,75X -> 5,25X with 1,5X objective	Motorized with AF	20
359-715-10	QS-L4020Z/AFC	400 x 200	150	0,75X -> 5,25X with 1,5X objective	Motorized with AF	15

Specifications

Accuracy[1]	$E_{1(x,y)}$ =(2,2 + 0,02L) µm $E_{1(z)}$ =(4,5 + 0,006L) µm **L** =measured length (mm) [1]According to Mitutoyo inspection method
Illumination	- Contour: White LED - Coaxial: White LED - Ring Light: 4-quadrant White LED

Optional accessories

No.	Description
937179T	Footswitch for SPC
12AAJ088	Footswitch
02AVA410	Z-Objective 1X
02AVA450	Z-Objective 2X

Refer to the Optical Accessories page for Quick Scope / Quick Vision for more information on calibration charts.

1X, 1.5X and 2X interchangeable lens

Quick Scope brochure on request

All products to be sold to commercial customers.
Product illustrations are without obligation. Product descriptions, in particular any and all technical specifications, are only binding when explicitly agreed upon.

Software for Quick Scope Systems

QSPAK

- Easy to use, single mouse-click edge-detection tools
- Template tools for comparative analysis.
- Video image capture.
- Stage navigation function for CNC machines giving you improved measurement cycles.

No.	Type
QSPAK	Software for Quick Scope systems

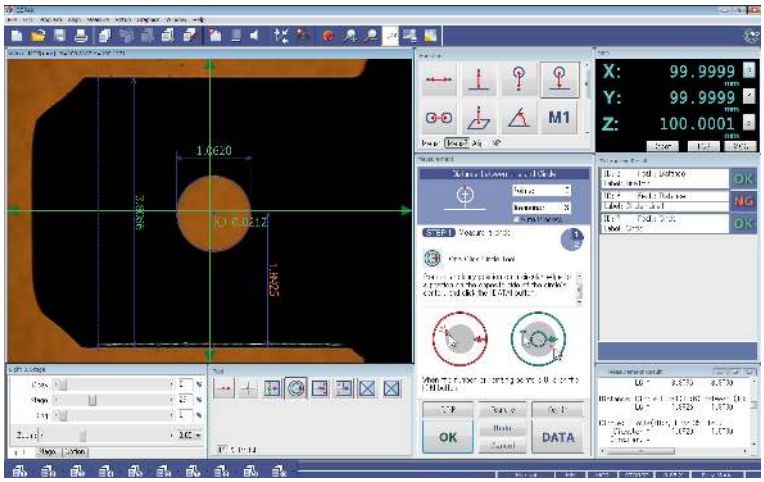

QSPAK Layout: Easy mode

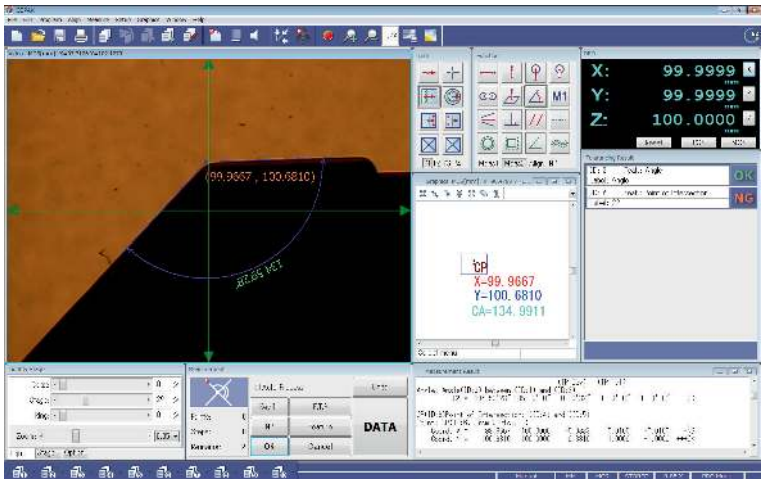

QSPAK Layout: Pro mode

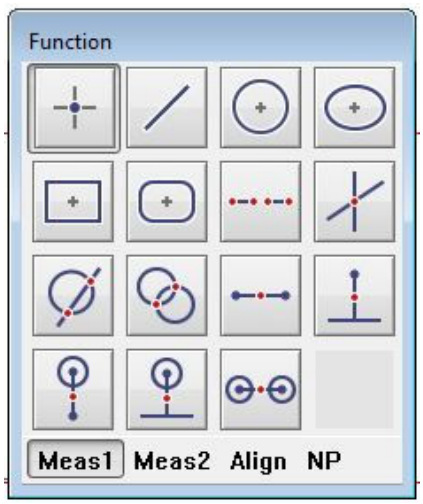

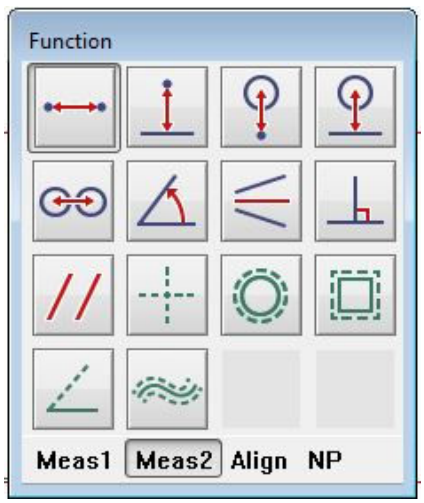

Measurement item commands

Specifications

QIPAK Additional software (optional)	MEASURLINK (refer to the Measurlink page) QS CAD-IMPORT/EXPORT FORMTRACEPAK-AP(1)

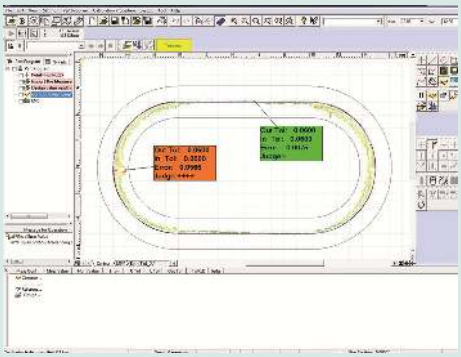

(1) FORMTRACEPAK-AP

Simple and easy-to-use 2D contour analysis.
Graphic reports (geometry or scanning) edition.
Allows measurement by comparison.
For more information refer to FORMTRACEPAK-AP

All products to be sold to commercial customers.
Product illustrations are without obligation. Product descriptions, in particular any and all technical specifications, are only binding when explicitly agreed upon.

Mitutoyo

Quick Vision ACTIVE

This CNC Vision Measuring System combines the flexibility of a high quality zoom lens with the speed of a state-of-the-art digital colour camera and offers the following benefits:

- Programmable LED stage- and coaxial-light
- Programmable 4-quadrant LED ring light
- High-resolution and high-speed CMOS colour camera
- High-quality 7-step zoom optics with interchangeable lenses
- Compact design
- Powerful, user-friendly QVPAK software
- Touch probe option

QV ACTIVE 202

No.	Model	Range (X, Y, Z-axis) with Vision Head	Measuring range (X×Y×Z)	Max. stage loading [[kg]]
363-109-30	QV-L202Z1L-D	250x200x150 mm	250x200x150 mm	10
363-110-30	QV-L404Z1L-D	400x400x200 mm	400x400x200 mm	20

Specifications

Resolution	0,1 µm
Accuracy	$E_{1(x,y)}$ = (2+0,3L/100) µm $E_{1(z)}$ = (3+0,5L/100) µm $E_{2(XY)}$= (2,5+0,4 L/100) µm L = measured length (mm)
Illumination	(White LED) • Contour • Coaxial • 4-quadrant ring light
Magnification change system	Zoom optical system with 8 positions Standard 1,5X magnification lens
Sensor type	High resolution CMOS colour camera
Additional objective lenses	1X and 2X magnification

Optional accessories

No.	Description
02AVA410	Z-Objective 1X
02AVA450	Z-Objective 2X

Quick Vision ACTIVE with optional opti-fix clamping system

1X, 1,5X and 2X interchangeable lens

All products to be sold to commercial customers.
Product illustrations are without obligation. Product descriptions, in particular any and all technical specifications, are only binding when explicitly agreed upon.

Quick Vision APEX / HYPER

This CNC Vision Measuring System is a floor-standing vision measuring machine which offers you the following benefits:

- Programmable LED stage- and coaxial-lighting.
- Programmable 4-quadrant LED ring light.
- Pattern focus function.
- Accuracy specifications conforming to ISO 10360-7 standard (on request).
- Temperature compensation as standard feature.
- Touch probe option.

Optional PFF Function (Points From Focus)

- PFF enhances the functionality of standard QV models with 3D topography measurements.
- No additional sensor necessary.
- Large scanning range in Z axis from 2,7 mm up to 40,6 mm in wide range mode depending on the objective used.

Touch Probe option

Workpiece to be measured with PFF

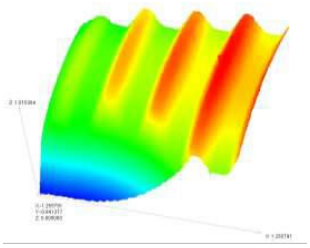

3D Analysis of PFF measurement

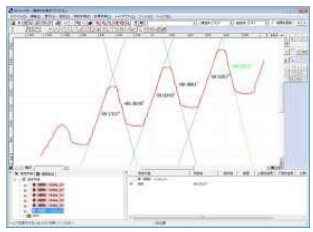

2D Analysis of PFF measurement

PRL = Programmable Ring Light
Fine control of angle and direction provides illumination for optimal measurement. You can set the angle in the range from 30° to 80°. This type of illumination is effective for enhancing the edge of inclined surfaces or very small steps. Illumination can be controlled independently from back or front, right or left. Measurement with edge enhancement is possible if you form a shadow by illuminating from only one direction.

Specifications

Illumination	(White LED) • Contour • Coaxial • 4 quadrant PRL
Magnification change system	Programmable Power Turret (PPT) 1X ; 2X ; 6X
Sensor Type	**QV PRO Models:** High sensitivity CCD B&W camera
Factory option	**For QV APEX and QV HYPER:** **- TAF** Tracking Auto Focus Refer to the Quick Vision Accessories page for details
Additional objective lenses	Refer to the Optical Accessories page for Quick Scope / Quick Vision

Optional accessories

No.	Description
Calibration charts	
02ATN695.	Calibration chart with holder

Refer to the Optical Accessories page for Quick Scope / Quick Vision for more information on calibration charts.

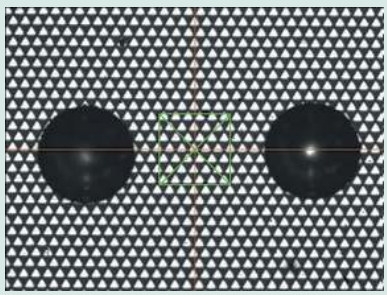

Auto Focus Tool : type Pattern Focus (tool for focusing on difficult surfaces such as mirrors, polished surface clear glass).

Refer to the Quick Vision brochure

All products to be sold to commercial customers.
Product illustrations are without obligation. Product descriptions, in particular any and all technical specifications, are only binding when explicitly agreed upon.

Quick Vision APEX / HYPER

QV APEX Pro and QVTP Pro

QV **APEX Pro**
CNC Vision Measuring System

All the **QUICK VISION Pro** models are equipped with a strobe light, and the newly developed vision measuring function "StrobeSnap" delivers measurements with both high throughput and high accuracy. Regardless of the continuity of measuring positions, measuring time can be shortened by about 35 to 45% for most measurement samples when compared with our former system. The STREAM function provides an amazingly high throughput, due to the non-stop measurement where the camera motion and the strobe light are synchronized. It can shorten measuring time more than StrobeSnap due to the continuous element measurement as shown in the following conceptual image of measurement.

- This is a superior model of QUICK VISION, which is equipped with the StrobeSnap function as standard, enabling high-speed measurement.
- We offer a model with Tracking Auto Focus (TAF) that quickly focuses on the object improving throughput significantly.
- The camera motion and the strobe light are synchronized to make non-stop vision measurements without stopping the stage. This makes it possible to use STREAM to shorten measuring time dramatically.

QVTP Pro
CNC Vision Measuring System Equipped with a Touch-Trigger Probe

- Non-contact measurement and contact measurement can be done solely by one unit. QVTP Pro can perform contact measurement by using the vision measuring function and the touch-trigger probe.
- Three-dimensional workpiece measurements can be performed. Enables 3D measurement of workpieces such as press-molded products, plastic-molded products, and cut products, which until now could not be measured with image processing alone.
- Using the probe module change rack allows switching between vision measurement and touch-trigger probe measurement during an automatic measuring sequence.

QV Apex 302 Pro

QV Apex 404 Pro

QV Apex 606 Pro

No.	Model	Measuring range (X×Y×Z)	Max. stage loading [[kg]]
363-601	QV Apex 302 Pro - White LED	300 x 200 x 200 mm	20
363-602	QV Apex 302 Pro - Colour LED	300 x 200 x 200 mm	20
363-603	QV Apex 302 Pro - White LED - TAF	300 x 200 x 200 mm	20
363-604	QV Apex 302 Pro - Colour LED - TAF	300 x 200 x 200 mm	20
363-611	QV Apex 404 Pro - White LED	400 x 400 x 250 mm	40
363-612	QV Apex 404 Pro - Colour LED	400 x 400 x 250 mm	40
363-613	QV Apex 404 Pro - White LED - TAF	400 x 400 x 250 mm	40
363-614	QV Apex 404 Pro - Colour LED - TAF	400 x 400 x 250 mm	40
363-621	QV Apex 606 Pro - White LED	600 x 650 x 250 mm	50
363-622	QV Apex 606 Pro - Colour LED	600 x 650 x 250 mm	50
363-623	QV Apex 606 Pro - White LED - TAF	600 x 650 x 250 mm	50
363-624	QV Apex 606 Pro - Colour LED - TAF	600 x 650 x 250 mm	50

All products to be sold to commercial customers.
Product illustrations are without obligation. Product descriptions, in particular any and all technical specifications, are only binding when explicitly agreed upon.

Quick Vision APEX / HYPER

QV HYPER Pro and QVTP Pro

High-accuracy CNC Vision Measuring System

- The QV HYPER Pro is a highly accurate model that is equipped with a high-resolution/accuracy scale.
- We offer a model with Tracking Auto Focus (TAF) that quickly focuses on the object improving throughput significantly.
- The camera motion and the strobe light are synchronized to make non-stop vision measurements without stopping the stage. This makes it possible to use STREAM to shorten measuring time dramatically.
- There is a general-purpose model with white LED light and an enhanced edge detection model with RGB color LEDs.
- This model is standard-equipped with automatic temperature compensation that uses a temperature sensor on the main unit of the measuring machine and a temperature sensor for the workpiece.

CNC Vision Measuring System Equipped with a Touch-Trigger Probe

- Non-contact measurement and contact measurement can be done solely by one unit. QVTP Pro can perform contact measurement by using the vision measuring function and the touch-trigger probe.
- Three-dimensional workpiece measurements can be performed. Enables 3D measurement of workpieces such as press-molded products, plastic-molded products, and cut products, which until now could not be measured with image processing alone.
- Using the probe module change rack allows switching between vision measurement and touch-trigger probe measurement during an automatic measuring sequence.

QV Hyper 302 Pro

QV Hyper 404 Pro

QV Hyper 606 Pro

No.	Model	Measuring range (X×Y×Z)	Max. stage loading [[kg]]
363-605	QV Hyper 302 Pro - White LED	300 x 200 x 200 mm	15
363-606	QV Hyper 302 Pro - Colour LED	300 x 200 x 200 mm	15
363-607	QV Hyper 302 Pro - White LED - TAF	300 x 200 x 200 mm	15
363-608	QV Hyper 302 Pro - Colour LED - TAF	300 x 200 x 200 mm	15
363-615	QV Hyper 404 Pro - White LED	400 x 400 x 250 mm	30
363-616	QV Hyper 404 Pro - Colour LED	400 x 400 x 250 mm	30
363-617	QV Hyper 404 Pro - White LED - TAF	400 x 400 x 250 mm	30
363-618	QV Hyper 404 Pro - Colour LED - TAF	400 x 400 x 250 mm	30
363-625	QV Hyper 606 Pro - White LED	600 x 650 x 250 mm	40
363-626	QV Hyper 606 Pro - Colour LED	600 x 650 x 250 mm	40
363-627	QV Hyper 606 Pro - White LED - TAF	600 x 650 x 250 mm	40
363-628	QV Hyper 606 Pro - Colour LED - TAF	600 x 650 x 250 mm	40

All products to be sold to commercial customers.
Product illustrations are without obligation. Product descriptions, in particular any and all technical specifications, are only binding when explicitly agreed upon.

Quick Vision ACCEL

Quick Vision Accel - 3D CNC Vision Measuring System for large work pieces

This CNC vision measuring system is a moving-bridge type structure.
The Quick Vision ACCEL offers you the following benefits:

- The moving-bridge type structure results in a fixed stage. This means that the workpiece fixture can be designed more simply, which in turn means you need significantly fewer man-hours for fixture fabrication and inspection.
- The system comes complete with a machine stand.
- 3D topography measurements are possible with the optional PFF functionality.
- Tracking Auto Focus (TAF) as factory option.

No.	Model	Range (X, Y, Z-axis) with Vision Head	Max. drive speed X, Y-axis [mm/s]	Accuracy E1
363-315-20	QV ACCEL 808 PRO	800 x 800 x 150 mm	400	(1,5+0,3L/100) µm
363-335-20	QV ACCEL 1010 PRO	1000 x 1000 x 150 mm	400	(1,5+0,3L/100) µm

All products to be sold to commercial customers.
Product illustrations are without obligation. Product descriptions, in particular any and all technical specifications, are only binding when explicitly agreed upon.

Quick Vision ULTRA

Additional objective lenses	Refer to Objective page for Quick Scope / Quick Vision

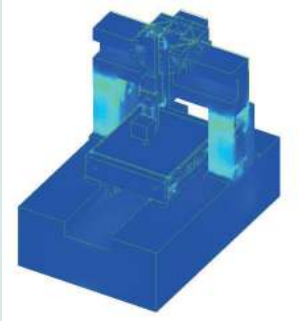

By using FEM (Finite Element Method) analysis of the base design, the placement of stiffening ribs and beams has been determined for the Quick Vision Ultra to provide optimal structural rigidity.

Ultra-precision scale manufacturing facility 11 metres underground

Ultra-high accuracy crystallized glass scale with virtually zero thermal expansion.
The Quick Vision Ultra is equipped with a crystallized glass scale having a resolution of 0.01 µm and linear expansion coefficient of 0.08 x 10^{-6}/K. This virtually zero thermal expansion means the Quick Vision Ultra can minimise accuracy fluctuation due to thermal changes.

Quick Vision brochure on request

This CNC vision measuring system gives you ultra-high accuracy.
The Quick Vision ULTRA offers you the following benefits:

- Axial translation straightness is maximised through the use of a precision air-bearing linear guide system.
- High resolution (0,01 µm) scales, manufactured at an ultra-precision facility located 11 m underground, are used on all axes.
- The scales are made from glass that has a virtually zero thermal expansion coefficient, so your measuring accuracy has minimal variation in changing temperatures.
- The base structure was designed using Finite Element Method analysis; this gives you the optimal stiffness/weight ratio combined with excellent geometrical stability, in terms of axial straightness / perpendicularity, with changing temperatures.
- Accuracy specification conforming to ISO 10360-7 are available (on request).
- 3D topography measurements are possible with the optional PFF functionality.

Quick Vision ULTRA 404 PRO

No.	Model	Factory option	Range (X, Y, Z-axis) with Vision Head	Max stage loading [kg]
363-518-20S	QV-U404P1N-D	Refer to Quick Vision Accessories page	400 x 400 x 200 mm	40
363-519-20S	QV-U404T1N-D	**- Tracking Auto Focus (TAF)** Refer to Quick Vision Accessories page	400 x 400 x 200 mm	40

All products to be sold to commercial customers.
Product illustrations are without obligation. Product descriptions, in particular any and all technical specifications, are only binding when explicitly agreed upon.

Mitutoyo

Quick Vision HYBRID Type 1

CNC Vision Measuring System

This CNC vision measuring system is a multi-sensor machine.
The Quick Vision HYBRID Type 1 offers you the following benefits:

- It allows you to make vision measurements with a CCD camera, and carry out high-speed scanning, by applying a vision measurement unit in parallel with a non-contact displacement sensor.
- The focussing point method minimises the difference in the measuring face reflectance and gives you high measurement reproducibility.
- The double pinhole method (less diretive) is employed as the measurement principle.

Quick Vision H1 APEX 404 PRO

Quick Vision HYBRID Type 1 system

The scanning laser system for Quick Vision HYBRID adds 3D profiling capability. The laser probe with 0.01 µm resolution continuously scans the workpiece surface and gathers coordinate data, enabling the evaluation of surface contours, peak heights, etc. The double pinhole detection method is adopted to prevent measurement being affected by the colour, reflection factor, etc., of the surface.

Available for Quick Vision APEX ; Quick Vision STREAM PLUS and Quick Vision HYPER

Specifications

Factory option	**- Colour CCD camera** QV PRO 3 models

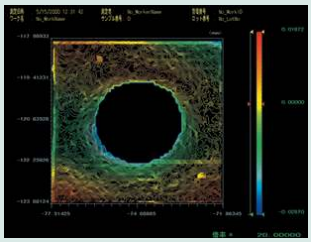

Curved-form analysis (MSHAPE-QV)
2D / 3D contour lines display
2D / 3D unfiltered profile display
Shadowgraph display
Curved plane analysis
Unfiltered profile analysis, etc.

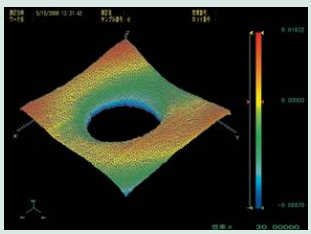

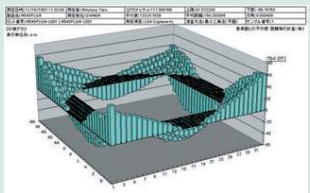

Data processing (QV Graph)
3D bar chart display
3D surface chart display
2D continuous cross-section graph display

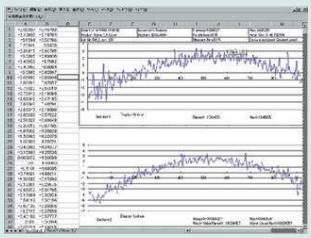

Quick Vision brochure on request

All products to be sold to commercial customers.
Product illustrations are without obligation. Product descriptions, in particular any and all technical specifications, are only binding when explicitly agreed upon.

Quick Vision HYBRID Type 4 Series

Hybrid Type 4 system
The Quick Vision Hybrid Type 4 is a machine which allows vision measurement with a CCD camera and high-speed scanning with a non-contact displacement sensor.
The Hybrid Type 4 CPS sensor is available for Quick Vision Apex/Hyper models.

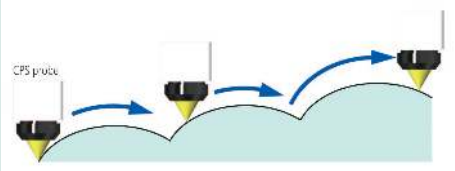

Scanning measurement with automatic movement of the Z-axis

Form analysis of plastic molded parts having a slope.

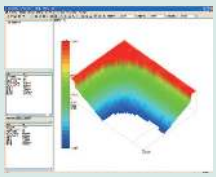

Solid colour display

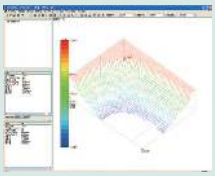

Shaped display

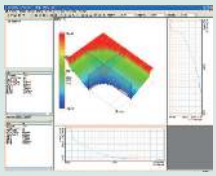

Extraction of arbitrary section

CNC Vision Measuring System

- This dual system with a non-contact displacement sensor has a scanning function thatenables measurement of minute height differences and 3D shapes.
- The non-contact displacement sensor (CPS probe) uses the wavelength confocal method.
- The LED used as the light source of the displacement sensor has an auto-brightness control function that enables seamless measurement of materials with different reflectivity.

No.	Measuring range (X×Y×Z)	Non-contact displacement sensor measuring range (X×Y×Z) [mm]	Non-contact displacement sensor measuring accuracy [µm]
365-601	300 x 200 x 200	176 x 200 x 200	E1Z (1,5 + 4L/1000)
365-605	300 x 200 x 200	176 x 200 x 200	(1,5 + 2L/1000)
365-611	400 x 400 x 250	276 x 400 x 250	E1Z (1,5 + 4L/1000)
365-615	400 x 400 x 250	276 x 400 x 250	(1,5 + 2L/1000)
365-621	600 x 650 x 250	476 x 650 x 250	E1Z (1,5 + 4L/1000)
365-625	600 x 650 x 250	476 x 650 x 250	(1,5 + 2L/1000)

All products to be sold to commercial customers.
Product illustrations are without obligation. Product descriptions, in particular any and all technical specifications, are only binding when explicitly agreed upon.

Quick Vision White Light Interferometer

- Combines non contact measurements with vision system and White Light Interferometer (WLI)
- Easy alignment and positioning with vision sensor
- Full QVPAK functionality with vision system
- Enhanced functionality with WLI-system for high resolution topography evaluation such as surface roughness analysis

Quick Vision WLI 404 PRO

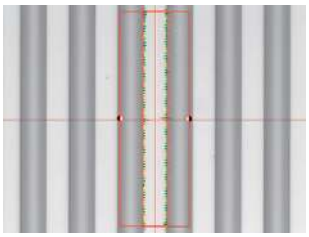

Video image of part

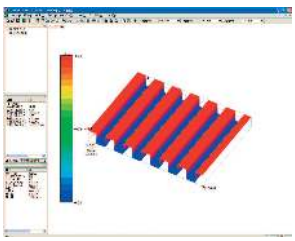

3D Analysis of measured part

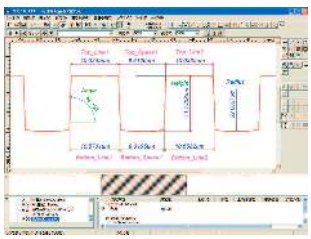

2D Analysis of measured part

Specifications when using vision sensor are same as Quick Vision HYPER

Model	QVW-H302P1L-D	QVW-H404P1L-D	QVW-H606P1L-D
No.	**363-713-20S**	**363-714-20S**	**363-715-20S**
Model	Hyper Quick Vision WLI 302	Hyper Quick Vision WLI 404	Hyper Quick Vision WLI 606
Range (X, Y, Z-axis) with Vision Head	300 x 200 x 190 mm	400 x 400 x 240 mm	600 x 650 x 220 mm
Range with WLI Head	215 x 200 x 190 mm	315 x 400 x 240 mm	515 x 650 x 220 mm
Repeatability WLI Head	$2\sigma \leq 0{,}08$ µm	$2\sigma \leq 0{,}08$µm	$2\sigma \leq 0{,}08$µm
Tube Lens WLI Head	2X	2X	2X
Z-axis measuring range WLI Head	170 µm	170 µm	170 µm
Max. stage loading [kg]	15	25	35

Optional accessories

No.	Description
02ALT630	Quick Vision WLI Objective, A-10X
02ALT670	Quick Vision WLI Objective, A-25X
02ALY400	Quick Vision WLI Objective, A-5X

QV WLI Objective lenses
Magnification 10X: Field of View 0,32 x 0,24 mm
Magnification 25X: Field of View 0,128 x 0,096 mm
Magnification 5X: Field of View 0,64 x 0,48 mm

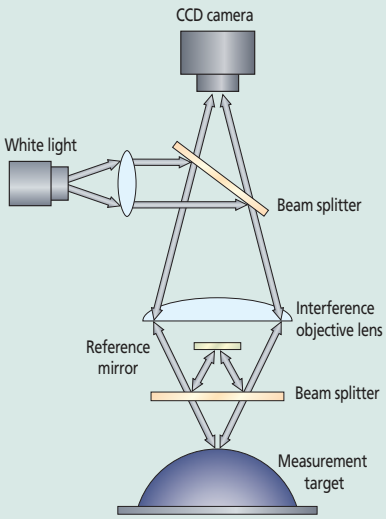

WLI optical system head

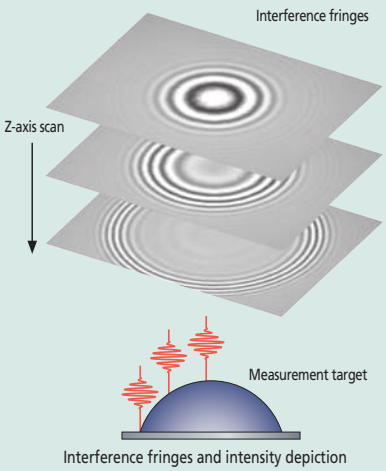

Interference fringes and intensity depiction

Scan QR Code with your mobile device and watch our product videos on YouTube

All products to be sold to commercial customers.
Product illustrations are without obligation. Product descriptions, in particular any and all technical specifications, are only binding when explicitly agreed upon.

MiScan Vision System

MPP-NANO Module 0.8 master gear measurement

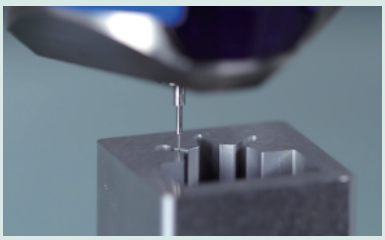

MPP-NANO mold scanning

SP25M

Series 364 - CNC Vision Measuring System

The MiSCAN MVS-HYPER and MVS-APEX vision systems combine advanced image processing with tactile scanning measurements.

- The MVS-HYPER 302 can be equiped with either the MPP-Nano probe or SP25M scanning probe.
- MPP-Nano is a high accuracy scanning probe for measurement of minute parts and uses stylus modules with tip diameters varying from 125 up to 500 µm.
- MVS-HYPER 404 and MVS APEX 404 models are equipped with the SP25M scanning probe for standard scanning jobs with medium size measuring range.
- The MiSCAN Vision Systems are driven by the powerful combination of MCOSMOS and VISION-PAK-PRO software to guarantee maximum functionality for both non-contact and tactile measurements.
- All the benefits of the standard QUICK VISION HYPER/APEX systems are also incorporated in the MiSCAN Vision systems

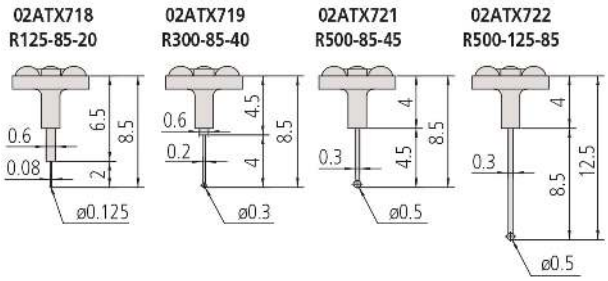

MPP-Nano touch probes

Type	MiSCAN HYPER 302	MiSCAN APEX 404	MiSCAN HYPER 404
No.	**364-502-10S**	**364-511-10S**	**364-512-10S**
Model	MVS-H302P1L-D	MVS-X404P1L-D	MVS-H404P1L-D
Resolution µm	0,02	0,1	0,02
Measuring range using vision sensor	300 x 200 x 200 mm	400 x 400 x 250 mm	400 x 400 x 250 mm
Measuring range using scanning probe	175 x 200 x 200 mm	275 x 400 x 250 mm	275 x 400 x 250 mm
Measurement accuracy with vision sensor [µm]	E_{1x}, $E_{1y=}$ (0,8+0,2L/100) E_{1z}= (1,5+0,2L/100) E_{2xy}= (1,4+0,3L/100)	E_{1x}, $E_{1y=}$ (1,5+0,3L/100) E_{1z}= (1,5+0,4L/100) E_{2xy}= (2,0+0,4L/100)	E_{1x}, $E_{1y=}$ (0,8+0,2L/100) E_{1z}= (1,5+0,2L/100) E_{2xy}= (1,4+0,3L/100)
Measurement accuracy with scanning probe [µm]	$E_{0,MPE}$= (1,9+0,4L/100)	$E_{0,MPE}$= (2,5+0,6L/100)	$E_{0,MPE}$= (1,9+0,4L/100)
Mass kg	360.0	579.0	579.0
Max. stage loading [kg]	15	40	30

All products to be sold to commercial customers.
Product illustrations are without obligation. Product descriptions, in particular any and all technical specifications, are only binding when explicitly agreed upon.

Mitutoyo

UMAP Vision System Series

UMAP: Ultra Micro and Accurate Probe

The UMAP (Ultra Micro and Accurate Probe) is a micro-form measuring system
The UMAP offers you the following benefits:

- Dual functions of high-accuracy contact and non-contact measurement in one machine.
- Contact (micro-stylus UMAP probe) and non-contact (vision probe) measuring probes are installed.
- You can measure micro-features of parts previously impossible to reach.
- Several diameters of micro-stylus are available from 15 µm to 300 µm.

Hyper UMAP 302 Type 2

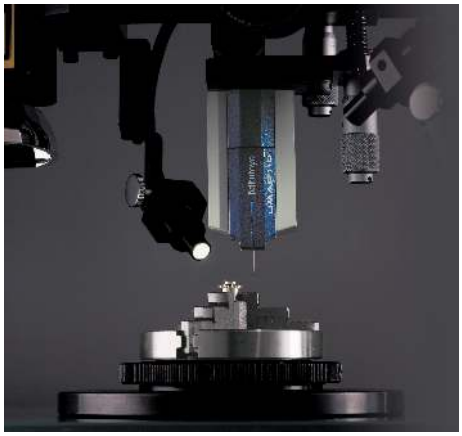

UMAP Probe Unit

UMAP Probes
(ultrasonic micro stylus probes)
Stylus ultrasonic micro-vibration and its amplitude-sensing enable UMAP probe to perform contact measurement of micro-features of parts.
5 choices of stylus tip diameter are available from 15 µm to 300 µm.

UMAP 101
ø15 µm
L = 0,2 mm

UMAP 103
ø30 µm
L = 2 mm

UMAP 107
ø70 µm
L = 5 mm

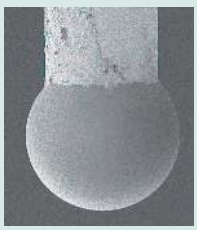

UMAP 110
ø100 µm
L = 10 mm

UMAP 130
ø300 µm
L = 16 mm

Refer to the UMAP Vision system brochure

Type 2 - QVPAK + CCD + UMAP Probe

Type	Hyper UMAP 302 Type 2	Ultra UMAP 404 Type 2
No.	**364-713-20S**	**364-717-20S**
Range (X-, Y-axis) [1]	185 x 200 mm	285 x 400 mm
Range (Z-axis) [1]	**- UMAP 101/103 :** 175 mm **- UMAP 107/110 :** 180 mm **- UMAP 130 :** 185 mm	**- UMAP 101/103 :** 175 mm **- UMAP 107/110 :** 180 mm **- UMAP 130 :** 185 mm
Accuracy [2]	$E_{1(x,y)}$ = (0,8+0,2L/100) µm $E_{1(Z)}$ = (1,5+0,2L/100) µm	$E_{1(x,y)}$ = (0,25+0,1L/100) µm $E_{1(Z)}$ = (1,5+0,2L/100) µm
Repeatability (σ)	**- UMAP 101/103/107 :** 0,1 µm **- UMAP 110/130 :** 0,15 µm	**- UMAP 101/103/107 :** 0,08 µm **- UMAP 110/130 :** 0,12 µm

[1] When using the UMAP system length (mm) [2] According to Mitutoyo inspection method **L** = measured

All products to be sold to commercial customers.
Product illustrations are without obligation. Product descriptions, in particular any and all technical specifications, are only binding when explicitly agreed upon.

Software for Quick Vision Systems

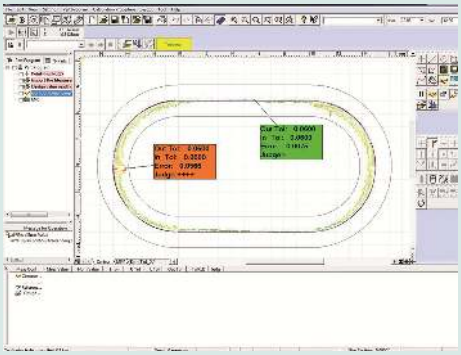

FORMTRACEPAK-AP
Simple and easy-to-use 2D contour analysis.
Graphic reports (geometry or scanning) edition.
Allows measurement by comparison.
For more information refer to FORMTRACEPAK-AP.

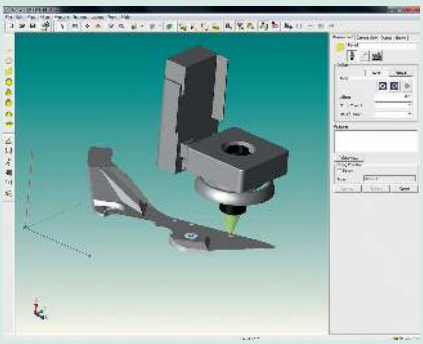

QV3DCAD
Automatic program generation from 3D CAD files issued from a CAD system (must be associated with a converter).

Vision Measuring Machines brochures on request

QVPAK

- QVPAK controls multiple sensors: Vision sensor, Touch Probe, continuous scanning devices, special UMAP or LNP probes.
- Powerful mathematical algorithms are provided that help you to detect difficult edges via noise filters (similar to morphological filters) and advanced detection tools that take into account the texture of the target surface.
- Partprogramming and editing is made easy with the user friendly Easy Editor.
- 3D graphic display or measuring planes display with the QVClient QVGraphic.
- QVPAK also offers you various QVClients (standard), assistants for users (programming mode) or operators (production mode) such as QVSmartEditor and QVNavigator.

Optional software modules for Quick Vision System

- Formtracepak-AP-QV for 2D contour analysis.
- Formtracepak-Pro for 3D surface analysis.
- QV Part Manager for managing the execution of parts programs of multiple parts.
- Easypag-Pro for offline generation of part programs from 2D CAD data.
- QV3DCAD for online generation of part programs from 3D CAD files.
- MeasurLink for statistical process control (SPC).
- QV3DPAK for 3D topography measurements (see explanation below).
- For more information refer to the Vision Measuring Machines brochures.

Optional PFF Function (Points From Focus)

- PFF enhances the functionality of standard QV models with 3D topography measurements.
- No additional sensor necessary.
- High scanning range in Z axis from 2,7 mm upto 40,6 mm depending on the objective lens in use and in wide range mode.
- PFF is a retro fittable option for Quick Vision APEX/HYPER and Quick Vision ULTRA.
  Please contact your local Mitutoyo office for more detailed information.

Workpiece to be measured with PFF

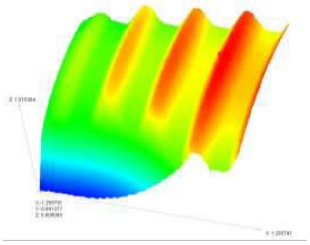

3D Analysis of PFF measurement

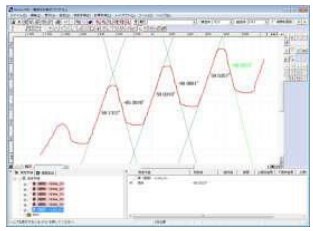

2D Analysis of PFF measurement

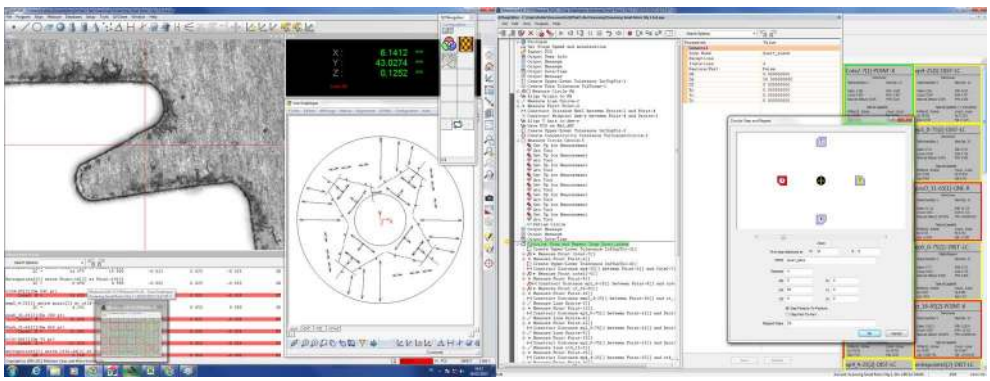

Example of the QVPAK screen layout.

All products to be sold to commercial customers.
Product illustrations are without obligation. Product descriptions, in particular any and all technical specifications, are only binding when explicitly agreed upon.

Mitutoyo

Accessories for Quick Vision Systems

Touch Probe Option

An optional touch probe (TP) is available for following QV models:
Quick Vision ACTIVE; Quick Vision APEX ; Quick Vision HYPER ; Quick Vision ACCEL.

- The Quick Vision-TP system allows you to carry out both non-contact and contact measurements.
- Compatible with Renishaw Touch Probe TP 20 or TP 200.
- An optional MCR20 rack for storing probe modules enhances functionality even more.

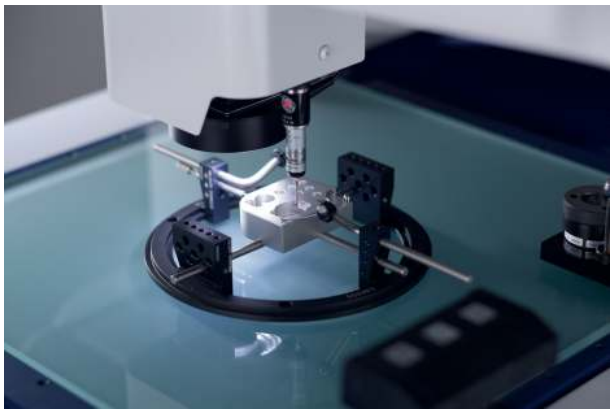

Quick Vision ACTIVE with Touch Probe option

Styli kit M2
Starter

CNC Vision Measuring System Equipped with a Touch-Trigger Probe

Refer to the Quick Vision brochure

TP20
Compact stylus change type.

TP200
Compact and high accuracy stylus change type

All products to be sold to commercial customers.
Product illustrations are without obligation. Product descriptions, in particular any and all technical specifications, are only binding when explicitly agreed upon.

Accessories for Quick Vision Systems

Tracking Auto Focus

Measurement example: Height of leads on a QFP package

Tracking Auto Focus Function TTL (Through The Lens) *

For Quick Vision APEX, Quick Vision HYPER, Quick Vision STREAM PLUS, Quick Vision ULTRA
The Tracking Auto Focus unit (TAF) allows stable, high-speed measurement in the Z-axis, due to the knife-edge method adopted in the detection system.
The TAF function tracks the waviness and warp of the workpiece surface in Z direction and enhances throughput compared with normal measuring mode.
When TAF is used on a Quick Vision STREAM PLUS model, fully non-stop measurements become possible.

Coaxial laser (TAF)

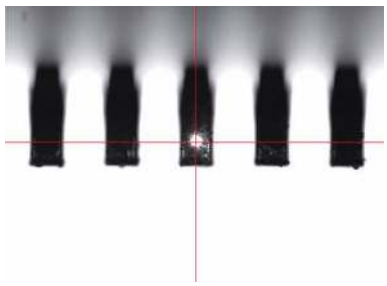

Laser spot (TAF)

TAF (Tracking Auto Focus)*

No.	Objective lens	Tracking range [mm]	Laser spot diameter [µm]
TAF-HR2,5X	QV-HR2,5X	±0,5	2,1
TAF-SL2,5X	QV-SL2,5X	±0,5	3,1
TAF-5X	QV-5X	±0,125	1,5
TAF-HR1X	QV-HR1X	±3,15	5,2
TAF-SL1X	QV-SL1X	±3,15	8

*factory option

Specifications

QV Index Head	Automatic multi-plane measurement is possible with the optional index table
Min. rotation angle	0,1 °
Max. rotation speed	10 rpm
Positioning Accuracy	±0,5°
Max. workpiece ø	140 mm

QV Index Head

Using the QV Index to rotate the workpiece makes it possible to automatically measure multiple surfaces without having to dismount/remount the workpiece.

All products to be sold to commercial customers.
Product illustrations are without obligation. Product descriptions, in particular any and all technical specifications, are only binding when explicitly agreed upon.

Objective Lenses and Calibration Charts

Quick Vision WLI Objective

No.	Model	Magnification 1*	Total magnification *2	Focal length [mm]	Working distance [mm]	Depth of focus [µm]	Field of View *2 [mm]
02ALT630	QV WLI A-10X	10x	20x	10	12,6	3,5	0,32 x 0,24
02ALT670	QV WLI A-25X	25x	50x	4	4,7	1,1	0,13 x 0,1
02ALY400	QV WLI A-5X	5x	10x	20	13,2	3,5	0,64 x 0,48

*1: Value when the focal length of the tube lens (1x) is 100 mm
*2: Value when the product is mounted to the WLI optical head (when the 2x tube lens and 1/2-inch CCD camera are used)

Objective Lenses and Calibration Charts

1. QV-Objective lens - HR (High Resolution) and SL (Long Working Distance) models

No.	Magnification	Model	Turret lens Mag. QV	Monitor Mag. QV	Working distance [mm]
02AKT199	0,5X	QV-SL0,5X	1X 2X 6X	16X 32X 96X	30,5
02ALA150	1X	QV-SL1X	1X 2X 6X	32X 64X 192X	52,5
02ALA170	2,5X	QV-SL2,5X	1X 2X 6X	80X 160X 480X	60
02ALA420	5X	QV-5X	1X 2X 6X	160x 320X 960X	33,5
02ALG010	10X	QV-SL10X	1X 2X 6X	320X 640X 1920X	30,5
02ALG020	25X	QV-25X	1X 2X 6X	800X 1600X 4800X	13
02AKT250	1X	QV-HR1X	1X 2X 6X	32X 64X 192X	40,6
02AKT300	2,5X	QV-HR2,5X	1X 2X 6X	80X 160X 480X	40,6
02AKT650	10X	QV-HR10X	1X 2X 6X	320X 640X 1920X	20

Remarks

- The monitor magnifications are approximate values.
- QV-10X, QV-25X: Depending on the workpiece the illumination may be insufficient at a turret lens magnification of 2X and 6X for QV models.
- QV-25X: The PRL illumination is restricted in its usable position.

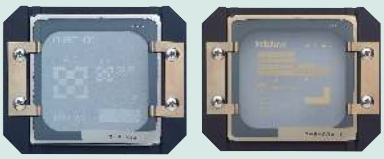

Calibration glass chart & Compensation glass chart with holder
A calibration or compensation chart is used to calibrate or compensate for the pixel size of the CCD and CMOS sensors, autofocus accuracy and the optical axis offset at each magnification of the Programmable Power Turret (PPT) or of the zoom.

All products to be sold to commercial customers.
Product illustrations are without obligation. Product descriptions, in particular any and all technical specifications, are only binding when explicitly agreed upon.

Modular Clamping System opti-fix

opti-fix Clamping System

Mini-vice (internal-external)

Precision quick chuck

Clamping jaw

Jaw tip ø0-2

Jaw tip ø1-3

Jaw tip ø4-5

Perpendicular jaw tip

Please download our Fixture brochure (PRE 1403) from the Mitutoyo website.

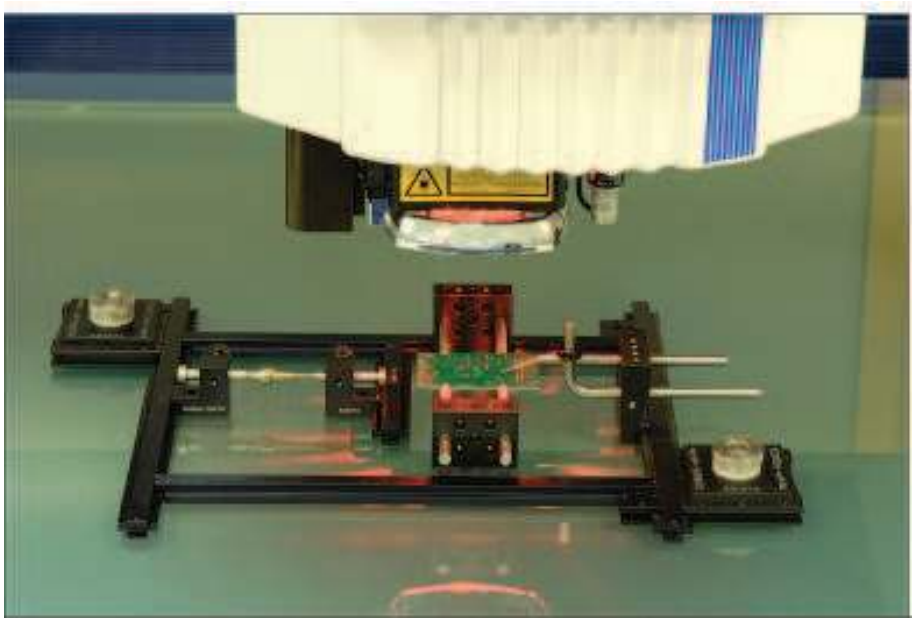

Electronic board raised to give clearance for the components on its underside. Placed directly on the glass stage of the machine without the opti-fix clamping system, the electronic board would not lie flat. The set-up is held on the glass surface by 2 suction cups.

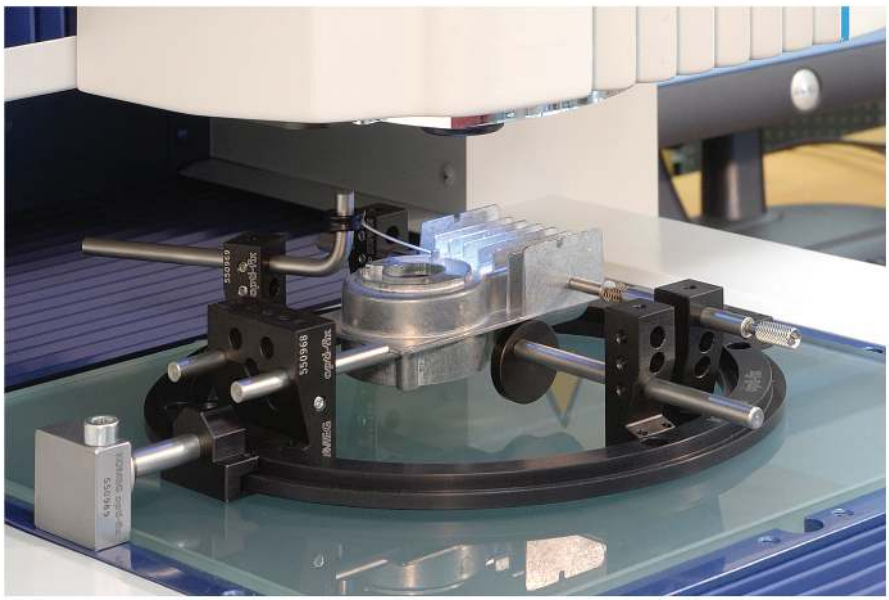

Example of application for holding prismatic parts (without the opti-fix clamping system, the part could not be positioned correctly). The set-up is held on the glass surface by a magnetic clamp attached to the stage frame.

All products to be sold to commercial customers.
Product illustrations are without obligation. Product descriptions, in particular any and all technical specifications, are only binding when explicitly agreed upon.

Mitutoyo in Europe

As Europe has become more integrated, a huge and vital market is being created. Mitutoyo is well placed for the integrated expansion of the European market. Under the strategic direction of Mitutoyo Europe GmbH there is a large production, sales and service network at your disposal, with (at present) more than 85 offices in 33 European countries.

Our leading market representation ensures that Mitutoyo's customers can take full advantage of the potential of the opportunities in this growing market - several integrated supply chain service functions supporting our dealer partners and commercial customers. We provide our clients on-site service in the areas of demand planning, integrated supply systems, distribution management, warehousing and fleet management.

Mitutoyo guarantees its service for installation, calibration, inspection and repair. From the smallest caliper towards the largest measuring device, just rely on our service. Moreover we support international customers with multilingual staff. A Japanese company opening a facility in Europe? Mitutoyo trains your staff in the Japanese language. A German company relocates capital equipment to a new plant in Russia? Mitutoyo supports your staff in Russia in the German language. Mitutoyo is where you are!

Research and development

Research and development is the cornerstone of our growth strategy and we are always seeking to provide innovative solutions by continually investing in our research and development capabilities. In recent times, the company has established itself as one of the world's most innovative providers of measuring technologies.

With substantial financial, technological and human investment Mitutoyo continues to develop advanced measurement solutions for quality assurance. New concepts, principles and technologies are constantly under development. Innovations are leading to continual improvement of our current products and may also form the basis of entirely new product lines.

Specialised products

If you want to accurately measure down to the micron under challenging conditions, you cannot afford mistakes in the choice of instruments and you do not want to deal with compatibility issues. Mitutoyo users have no interface problems and know they can rely on measurement systems from a supplier with one of the widest product ranges in the world.

Our current product portfolio includes more than 5000 specialised measuring instruments, from the traditional analogue micrometer to the highly accurate 3D coordinate measuring machines. The product range and Mitutoyo system solutions are optimally matched and work closely together. Mitutoyo complies with the requirements of international quality systems, including ISO 9001 and ISO / TS 16949 (automotive) and AS9100 (aerospace), as well as MSA R & R studies. This will not change in the future.

Proven quality

When it comes to quality assurance, only what is proven or what is provable matters. Your work demands guarantees regarding quality assurance.

Mitutoyo provides certificates and quality guarantees. These include a TÜV quality seal, an internationally recognised calibration certificate, guarantee card confirming IP protection, CE, etc.. With equipment that is, amongst other things, of proven high quality, you can concentrate fully on your own quality assurance.

Customised solutions

Mitutoyo stands for technological competence and ensures, in addition to sound advice, outstanding performance in project management and engineering. A good example is the M^3 Solutions concept. M^3 stands for Mitutoyo Measurement Metrology and is a service aimed at providing individual measurement solutions. This ensures we can meet the very specific needs of customers in the field related to production and integrated quality assurance.

M^3 Solutions include measurement task definition, environmental analysis and solution development including costs, project management and delivery of the plan. Additionally, you can rely on the vast experience of the largest single provider of length measurement technology to ensure your own specific requirements are met.

Training and knowledge

Do you want to know more? Then Mitutoyo is the right place. In our education and training center MIM (Mitutoyo Institute of Metrology) we offer software courses and seminars concerning the basics of 3D coordinate measuring technology, imaging metrology, surface roughness measurements and the subjects of hardness, roundness and using basic hand-held measuring tools.

All products to be sold to commercial customers.
Product illustrations are without obligation. Product descriptions, in particular any and all technical specifications, are only binding when explicitly agreed upon.

Apart from knowledge, MIM is also focused on the dialogue between specialists. Therefore, it is not only intended for customers of Mitutoyo, but also for all other experts in the field of manufacturing, service, education, science and research.

Technical support

Mitutoyo provides full support, especially in the area of technical customer service. We cover your needs from A to Z. Client services are extensive and range from regular maintenance of your equipment to repairing in our specialised workshops. From your first call, you benefit from the expertise of our technical customer service, even before the purchase of a measuring system. We advise you regarding the equipment specification that represents the best solution for your measurement needs. We can also show you how to get the best out of your existing equipment. We provide training in the use of our products to ensure optimal usage of software. All Mitutoyo hand-held measuring instruments sent in for repair are returned in a timely fashion after attention from our team of experienced and skilled technicians.

With this expertise and many years of experience we can advise customers with respect to maintenance, repair and calibration requirements for any other Mitutoyo measuring instrument.

Calibration by Mitutoyo
The standard for many of our clients

Through a unique international network of accredited Mitutoyo calibration laboratories we provide you with the security of metrological cross-checking between laboratories in fifteen countries, giving Mitutoyo a unique position in global metrological expertise. All fifteen calibration laboratories meet the high demands of ISO 17025.

The ISO / EC 17025 describes the general requirements for the competence of calibration laboratories. Mitutoyo performs all calibrations in accordance with this directive.

Each calibration and repair division contains a calibration laboratory enabling us to provide an optimal service in the area of calibration. To get an overview of what Mitutoyo calibration can do for you, please visit our website.

Optimisation by Mitutoyo

Part programming by Mitutoyo is a service that many of our clients benefit from. You can use our team of support specialists to help automate your measurement procedures.

Mitutoyo also offers a measurement service that may be a good solution for you if you are unable to carry it out due to lack of time, manpower or capacity. Our 3D coordinate measuring machines provide very accurate measurements and, if you wish, our specialists can write individual measurement programs for your Mitutoyo CMM.

We can provide part programming on site, thus ensuring our specialists can directly support you or your staff when writing or designing measurement programs.

All products to be sold to commercial customers.
Product illustrations are without obligation. Product descriptions, in particular any and all technical specifications, are only binding when explicitly agreed upon.

European Network

Since opening up the European market in the early sixties Mitutoyo has been continuously consolidating its presence in this economically important region.

We have been preparing for the expansion of the European market well in advance before it became reality to this extent. As a result, a close net of production, sales and service facilities in more than 85 establishments with different focal points is available to the customers in 33 European countries.

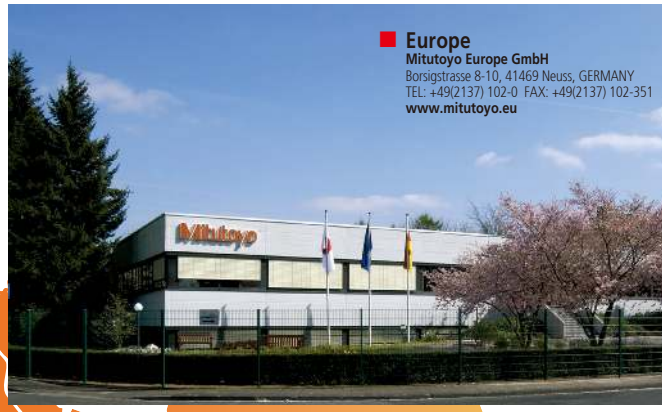

Europe
Mitutoyo Europe GmbH
Borsigstrasse 8-10, 41469 Neuss, GERMANY
TEL: +49(2137) 102-0 FAX: +49(2137) 102-351
www.mitutoyo.eu

In January 2010 Mitutoyo synchronised and strengthened the concerted pan-European activities by the establishment of an European headquarters. The location of Mitutoyo Europe GmbH is Neuss in the vicinity of Dusseldorf, Germany.

Mitutoyo Europe GmbH oversees all the activities of Mitutoyo's sales, service and production facilities throughout Europe and adjacent markets, including those of business strategies of such European operations. A Mitutoyo Europe GmbH key objective is to promote coordination amongst its European Group Companies in order to optimise its sales and technical support services in the best interests of customer satisfaction. A strong community for Europe's future.

- **Headquarters**
- **Sales Company**
- **Service Center**
- **Calibration Center**
- **M³ Solution Center**
- **Mitutoyo Institute of Metrology**
- **Research and Development Facility**
- **Manufacturing Facility**

All products to be sold to commercial customers.
Product illustrations are without obligation. Product descriptions, in particular any and all technical specifications, are only binding when explicitly agreed upon.

Mitutoyo Austria GmbH
Salzburger Straße 260/2 und 260/3
A-4600 Wels
Telefon: +43 7242 219 998
E-Mail: info@mitutoyo.at
www.mitutoyo.at

Mitutoyo Belgium NV
M3 Solution Center Melsele
Schaarbeekstraat 20
B-9120 Melsele
België/Belgique
Telefoon: +32 3 254 04 44
E-mail: info@Mitutoyobenelux.com
www.mitutoyo.be

Mitutoyo Česko s.r.o.
Dubská 1626, 415 01 Teplice, CZECH REP.
TEL: +420 417 579 866 FAX: +420 417 579 867
M³ Solution Center Ivančice
Ke Karlovu 62/10, 664 91 Ivančice, CZECH REP.
www.mitutoyo.cz

Mitutoyo Deutschland GmbH
Borsigstrasse 8-10, 41469 Neuss, GERMANY
TEL: +49(2137) 102-0 FAX: +49(2137) 86 85
M³ Solution Center Hamburg
Tempowerkring 9·im HIT-Technologiepark 21079
Hamburg, GERMANY
TEL: +49(40) 791 894-0 FAX: +49(40) 791 894-50
M³ Solution Center Leonberg
Steinbeisstrasse 2, 71229 Leonberg, GERMANY
TEL: +49(7152) 60 80-0 FAX: +49(7152) 608 060
M³ Solution Center Berlin
Paradiesstrasse 208, 12526 Berlin, GERMANY
TEL: +49(30) 26 11-267 FAX: +49(30) 26 29-209
M³ Solution Center Eisenach
im tbz Eisenach, Heinrich-Ehrhardt-Platz, 99817
Eisenach, GERMANY
TEL: +49(3691) 88 909-0 FAX: +49(3691) 88 909-9
M³ Solution Center Ingolstadt
Marie-Curie-Straße 1, 85055 Ingolstadt, GERMANY
TEL: +49(841) 95 49 20 FAX: +49(841) 95 49 250
Mitutoyo CTL Germany GmbH
Neckarstrasse 1/8, 78727 Oberndorf, GERMANY
TEL: +49(7423) 8776-0 FAX: +49(7423) 8776-99
www.mitutoyo.de

Mitutoyo Hungária Kft.
Galamb József utca 9.
2000 Szentendre, HUNGARY
info@mitutoyo.hu
www.mitutoyo.hu

Mitutoyo Italiana S.r.l.
Corso Europa, 7 - 20020 Lainate (MI), ITALY
TEL: +39(02) 935 781 FAX: +39(02) 93 73 290 9357 825 5
M³ Solution Center VERONA
Via A. Volta, 37062 Dossobuono (VR), ITALY
TEL: +39(045) 513 012 FAX: +39(045) 86 17 241
M³ Solution Center TORINO
Via Brandizzo, 133/F - 10088 Volpiano (TO), ITALY
TEL: +39(0) 11 91 23 995 FAX: +39(0) 11 99 53 202
M³ Solution Center CHIETI
Contrada Santa Calcagna - 66020 Rocca S. Giovanni (CH), ITALY
TEL/FAX: +39(0872) 709 217
www.mitutoyo.it

Mitutoyo Nederland BV
Koningsschot 41
3905 PR Veenendaal
Telefoon: +31 318 53 49 11
E-mail: info@mitutoyobenelux.com
KvK: 30085443
Mitutoyo Research Center Europe BV
De Rijn 18
5684 PJ Best
Telefoon: +31 499 320 200
KvK: 30182803
www.mitutoyo.nl

Mitutoyo Polska Sp.z o.o.
ul. Graniczna 8 A, 54-610 Wroclaw, POLAND
TEL: +48(71) 354 83 50 FAX: +48(71) 354 83 55
e-mail: mitutoyo@mitutoyo.pl
www.mitutoyo.pl

Mitutoyo Romania SRL
Strada Drumul Garii Odai Nr. 1A
Showroom, Parter
075100 OTOPENI- ILFOV, ROMANIA
TEL: +(40) 311 012 088 FAX: +(40) 311 012 089
www.mitutoyo.ro

Mitutoyo RUS LLC
13 Sharikopodshipnikovskaya, bld.2, 115088 Moscow,
RUSSIAN FEDERATION
TEL: +(7) 495 7450742 FAX: +(7) 495 7450742
www.mitutoyo.ru

Mitutoyo Scandinavia AB
Släntvägen 6, 194 61 Upplands Väsby, SWEDEN
TEL: +46(0) 8 594 109 50
M³ Solution Center Alingsås
Ängsvaktaregatan 3A, 441 38 Alingsås, SWEDEN
TEL: +46(0) 8 594 109 50
M³ Solution Center Värnamo
Kalkstensvägen 7, 331 44 Värnamo, SWEDEN
TEL: +46(0) 8 594 109 50
www.mitutoyo.se
M³ Solution Center Pirkkala
Viherkiitäjä 2A, 33960 Pirkkala, FINLAND
Tel: +358 (0) 20 792 9640
www.mitutoyo.fi
www.mitutoyo.se

Mitutoyo (Schweiz) AG
Steinackerstrasse 35, 8902 Urdorf, SWITZERLAND
TEL: +41(0) 447 361 150 FAX: +41(0) 447 361 151
www.mitutoyo.ch

Mitutoyo (UK) L.td.
Joule Road, West Point Business Park, Andover,
Hampshire SP10 3UX UNITED KINGDOM
TEL: +44(1264) 353 123 FAX: +44(1264) 354 883
M³ Solution Center Coventry
Unit6, Banner Park, Wickmans Drive, Coventry,
Warwickshire CV4 9XA, UNITED KINGDOM
TEL: +44(2476) 426 300 FAX: +44(2476) 426 339
M³ Solution Center Halifax
Lowfields Business Park, Navigation Close, Elland,
West Yorkshire HX5 9HB, UNITED KINGDOM
TEL: +44(1422) 375 566 FAX: +44(1422) 328 025
M³ Solution Center East Kilbride
The Baird Bulding, Rankine Avenue, Scottish Enterprise
Technology Park, East Killbride G75 0QF, UNITED KINGDOM
TEL: +44(1355) 581 170 FAX: +44(1355) 581 171
www.mitutoyo.co.uk

Mitutoyo France
Paris Nord 2-123 rue de la Belle Etoile, BP 59267 ROISSY
EN FRANCE 95957 ROISSY CDG CEDEX, FRANCE
TEL: +33(1) 49 38 35 00 FAX: +33(1) 48 63 27 70
M3 Solution Center LYON
Parc Mail 523, cours du 3eme millenaire
69791 Saint-Priest, FRANCE
TEL: +33(1) 49 38 35 70 FAX: +33(1) 49 38 35 79
M3 Solution Center STRASBOURG
Parc de la porte Sud, Rue du pont du peage
67118 Geispolsheim, FRANCE
TEL: +33(1) 49 38 35 80 FAX: +33(1) 49 38 35 89
M3 Solution Center CLUSES
Espace Scionzier 480 Av. des Lacs
74950 Scionzier, FRANCE
TEL: +33(1) 49 38 35 90 FAX: +33(1) 49 38 35 99
www.mitutoyo.fr

All products to be sold to commercial customers.
Product illustrations are without obligation. Product descriptions, in particular any and all technical specifications, are only binding when explicitly agreed upon.

Numerical Index

Series No	Description	PAGE
0 - 199		
	CMM Styli	588
	Styli Kits	589
011	CMM Software	576
011	DIGIMATIC Extension cable	25
011	DMX-1	31
011	DMX-16 / DMX-16 C	33
011	DMX-2	31, 32
011	DMX-3	30, 32, 34
011	DMX-8	33
011	Joint Magnetic Stand	306
011	Timerbox	35
011	Tolerance Box	35
011 / 076	Flexible Joint Arm	307
02	Sensorpak	362
02A	Accessories for Quick Vision	615
02A	Vision accessories	616
02AZD	Measurement Data Wireless : U-Wave	28
02AZE	Measurement Data Wireless : U-Wave	29
05	Optional Accessory for Calipers	204
06ADV	USB Input Tool Direct (Digimatic USB cable)	23
06AEN	USB-ITPAK	21
1	Dial Indicator	248, 250, 251, 266
1	One Revolution Dial Indicator	252
101	Ball attachment	105
101	Indicator accessories	274
102	Outside Micrometer	48
102	Ratchet Thimble Micrometer	47
103	Outside Micrometer	49, 50
104	Outside Micrometer interchangeable anvils	53
105	Outside Micrometer adjustable anvil	54
105	Series 105 - 1000 mm to 2000 mm Range	55
107	Dial Gauge Micrometer	97
110	Head	127
111	Spline Micrometer	77
112	Point Micrometer	82
113	Limit Micrometer	93
114	V-Anvil Micrometer	88
115	Tube Micrometer	80
117	Micrometer Interchangeable anvil	92
118	Sheet Metal Micrometer	57
119	Sheet Metal Micrometer Graduated Dial	58
120	Contact point	269
120	Indicator accessories	269, 270, 271
122	Blade Micrometer	86
123	Disc Micrometer	72
124	Gear Tooth Micrometer	69
125	Screw Thread Micrometer	66
126	Screw Thread Micrometer	63, 65
128	Depth Micrometer	206
129	Depth Micrometer	207
133	2-Point Inside Micrometer	146, 147
136	Indicator accessories	276
137	2-Point Inside Micrometer	148
139	2-Point Inside Micrometer	149
140	2-Point Inside Micrometer	150
141	2-Point Inside Micrometer	153
143	Caliper Jaw Micrometer	60
145	2-Point Inside Micrometer	145
146	Groove Micrometer	99
147	Can Seam Micrometer	89
147	Hub Micrometer	90
148	Head 13 mm	117, 118, 119
148	Head 5/6,5 mm	112, 113
148	Head 6,5/13 mm	114, 115
148	Head 6,5 mm	116
149	Head 15 mm	120
150	Head 25 mm	121
151	Head 25/50 mm	123
152	Head	124, 125, 126
153	Head	129
153	Head non-rotating spindle	128
155	Telescopic Gauge Set	166
156	Micrometer Stands	104
157	Optical Parallels	106
158	Optical Flats	107
160	Metric Workshop Vernier Caliper	186
164	DIGIMATIC non-rotating head	108
167	Micrometer Setting	100, 101, 102
167	Setting Standards Metric (unified) 60°	102
167	Setting Standards Metric Whitworth 55°	102
169	Disc Micrometer non-rotating spindle type	75
170	Calibration Tester	333
170	i-Checker Calibration Tester	334
172	PH-3515F Profile Projector	458
172	Workpiece Fixtures	467
174	DRO Extension cables	403
174	KA-Counter	402
176	Accessory for Measuring Microscope	433
176	Hyper MF/MF-U Measuring Microscope	434, 435
176	Manual MF-A/B Models	425
176	MF Measuring Microscope	429
176	MF-U Measuring Microscope	430, 432
176	Motor-Driven Z-axis MF-J Models	427
176	Reticles for Measuring Microscope TM-500	424
176	TM-500 Measuring Microscope	421, 423
177	Setting Rings	167
178	Accessories for SJ-210 and SJ-310	479, 480
178	Optional Accessories for Surftest, Contracer, Formtracer	532, 533
178	Optional Software USB Communication Tool	524
178	Optional Styli for Surftest and Formtracer SV-C series	525, 526, 527, 528, 529
178	Serie 178 - Surface Roughness Measuring Instrument with Software FORMTRACEPAK	487
178	Surface Roughness Measuring Instrument with Soft-wrae FORMTRACEPAK	488
178	Surftest Extreme SV-3000CNC	489
178	Surftest Extreme SV-M3000CNC	490
178	Surftest SJ-210	475, 476
178	Surftest SJ-210 and SJ-310 - S-Type	478
178	Surftest SJ-310	477
178	Surftest SJ-410	481, 482
178	Surftest SJ-500 and SJ-500P	483, 485
178	Surftest SV-2100 and SV-2100P	484, 486
182	Standard Scales	331, 332
182	Steel Rule	320
183	Pocket Comparator	468, 469
184	Thickness Gauge	318
187	Bevel Protractor	316, 317
191	CRYSTA-APEX	565
191	CRYSTA-Apex EX 1200R Series	569
191	CRYSTA-Apex S 1200 Series	564
191	CRYSTA-APEX V	563
191	MiSTAR Series	568
192	Dial Height Gauge	221
192	DIGIMATIC Height Gauge	224, 225
193	Digit Outside Micrometer	51
197	Head non-rotating spindle	129
200 - 299		
2	Dial Indicator	253, 254, 255, 256, 257, 258, 259, 267
2	Indicator accessories	276
2	One Revolution Dial Indicator	260, 261, 262
201	Dial Snap Gauges	98
209	Dial Caliper Gauge	294, 296
209	DIGIMATIC Caliper Gauge	295, 297, 298
211	Optional Accessories for Roundtest	523
211	Optional Styli for Roundtest	521, 522
211	Roundtest Extreme RA-2200CNC	516
211	Roundtest Extreme RA-H5200CNC	517, 518

Series No	Description	PAGE
211	Roundtest RA-10	506
211	Roundtest RA-120 and RA-120P	508, 509
211	Roundtest RA-1600	510
211	Roundtest RA-2200	512
211	Roundtest RA-H5200	514
211	Serie 211 - Form Measuring Instrument	519, 520
215	Gage Stand with granite base	305
215	Gauge Stand	303
215 / 7	Gage Stand with Square Hardened Steel Anvil	302
218	Contracer CV-2100	491
218	Formtracer Avant C-3000	494
218	Formtracer Avant FTA-C3000 and FTA-C4000	493
218	Formtracer Avant FTA-C4000 series	495
218	Formtracer Avant FTA-D3000 series	497
218	Optional Styli and Arms for Contracer and Formtracer SV-C series	530, 531
21AAA	Indicator accessories	268, 269, 270, 272
21AZB	Indicator accessories	275
21CZA	Lever Indicator accessories	288
227	Quick DIGIMATIC Micrometer	46
250	Micrometer Head	111
264	Data Processing Unit QM-Data 200	462
264	DP-1VR DIGIMATIC mini-processor	22
264	Measurement Data Wireless : U-Wave fit	26
264	MUX-10F Transmitter	33
264	USB Input Tool - Keyboard Interface	30
293	ABSOLUTE DIGIMATIC Micrometer QuickMike	45
293	DIGIMATIC Micrometer	39, 40, 41, 42
293	DIGIMATIC Micrometer QuantuMike	38
293	Digi Micrometer	43
293	High-Accuracy Digimatic Micrometer	37
300 - 399		
3	Dial Indicator	263
302	PJ-PLUS	453
303	Head Fixtures	130
303	PJ-H30 Profile Projector	454
304	PV-5110 Profile Projector	456
313	3-Wire units	103
314	DIGIMATIC V-Anvil Micrometer	87
317	Micrometer Interchangeable anvil	91
318	Litematic	381, 382
323	DIGIMATIC Disc Micrometer	71
324	Gear Tooth Micrometer	67
324	Interchangeable Anvils for Micrometer Series	70
326	DIGIMATIC Screw Thread Micrometer	61
329	DIGIMATIC Depth Micrometer	208
331	DIGIMATIC Spline Micrometer	76
332	OPTOEYE Edge Sensor	463
337	DIGIMATIC 2-Point Inside Micrometer	151
339	DIGIMATIC 2-Point Inside Micrometer	152
340	DIGIMATIC Micrometer interchangeable anvils	52
342	DIGIMATIC Crimp Height Micrometer	83
342	DIGIMATIC Point Micrometer	81
343	DIGIMATIC Caliper Jaw Micrometer	59
345	DIGIMATIC 2-Point Inside Micrometer	144
350	DIGIMATIC Head	109, 110
355	FALCIO-APEX 2000/3000 Series	570
355	STRATO-APEX	566
356	LEGEX	567
357	MACH-KO-GA-ME	572
357	MiSTAR Series	575
359	Quick Scope	600
359	Vision Unit	436
360	CARBstrato / CARBapex Series	571
360	MACH	573, 574
361	Quick Image	598
363	Quick Vision	602, 603, 607
363	Quick Vision Accel - 3D CNC Vision Measuring System for large work pieces	606
363	Quick Vision WLI	610
363	QV APEX Pro and QVTP Pro	604
363	QV HYPER Pro and QVTP Pro	605
364	Touch Probe Option	614
365	Quick Vision	608, 609, 611
368	3-Point Inside Micrometer	136, 137, 138, 139
369	ABSOLUTE DIGIMATIC Disc Micrometer Quickmike	74
369	DIGIMATIC Disc Micrometer non-rotating spindle type	73
375	Objectives Lens ML-Series	440
378	Eyepieces	437
378	Objectives	441, 442, 443, 444, 445, 446, 447, 448, 449, 450, 451, 452
378	Video Microscope Unit VMU Series	439
378	VMU Video Microscope Unit	438
379	Pulsed Light Source for TAGLENS	473
379	TAGLENS	470
379	TAGPAK-E (Optional Software)	471
379	Video Microscope Unit	472
389	DIGIMATIC Sheet Metal Micrometer	56
395	DIGIMATIC Tube Micrometer	78, 79
400 - 499		
4	Dial Indicator	265
406	Micrometer non rotating spindle	44
422	DIGIMATIC Blade Micrometer	84, 85
468	DIGIMATIC 3-Point Inside Micrometer	132, 134, 135
500 - 599		
500	ABSOLUTE Digimatic Caliper	171
500	ABSOLUTE Digimatic Caliper for large measuring range	173
500	ABSOLUTE Digimatic Caliper IP67	169
500	ABSOLUTE Digimatic Carbide Caliper	172
500	ABSOLUTE Digimatic Carbide Caliper IP67	170
505	Dial Caliper	184
510	Indicating Micrometer	94
511	Bore Gauge	158, 161, 164
511	Bore Gauge Accessories	161
511	Bore Gauge for Blind Holes	163
511	Bore Gauge for Small Holes	156
511	Bore Gauge - Short Leg Type	162
511	Bore Gauge - Standard type	157, 159
511	Bore Gauge with Micrometer Head	160
513	Lever Indicator	279, 281, 282, 283, 284, 285, 286, 287
513	Lever Indicator Overview	278
514	Standard Vernier Height Gauge	220
515	Bore Gauge Checker	165
515	CERA Caliper Checker	327
515	Check Master	329
515	Depth Micro Checker	326
515	Height Master	322, 324
515	Height Master accessories	325
515	Inside Micro Checker	328
515	Universal Height Master	323
516	Caliper Inspection Sets Metric	343, 352
516	CERA Gauge block Grade 0 with Inspection Certificate	348
516	CERA Gauge block Grade 1 with Inspection Certificate	349
516	CERA Gauge block Grade 2 with Inspection Certificate	350
516	CERA Gauge block Micrometer Inspection Sets Metric	353
516	Ceramic Metric Gauge Block Sets Overview	347
516	Gauge Block Accessories	357
516	Grade 0 with ISO Inspection Certificate	339
516	Grade 1 with ISO Inspection Certificate	340
516	Grade 2 with ISO Inspection Certificate	341
516	Grade K with ISO JCSS Certificate	338
516	Maintenance Kit for Gauge Block	359
516	Micrometer Gauge Block	344
516	Micrometer Inspection Sets Metric	344
516	Steel Metric Gauge Block Sets Overview	337

Mitutoyo

Series No	Description	PAGE
516	Step master	330
516	Wear Block Sets Metric ISO Standard	352
516	Wear Block Sets Metric with ISO Inspection Certificate	343
516	With ISO Inspection Certificate	342, 351
518	Digital Height Gauge QM-Height	228
518	Linear Height Gauge LH-600D/D	230
518	Optional Accessories for QM-Height	229
518	Optional Accessories Linear Height	231
519	Display Unit Mu-Checker	380
519	Inductive Probe Mu-Checker	378
521	Calibration Tester	333
523	Snap Gauge/Snap Micrometer	95, 96
525	Formtracer CS-3200	500
525	Formtracer CS-3300	499
525	Formtracer Extreme CS-5000CNC and CS-H5000CNC	504
525	Formtracer SV-C3200 and SV-C4500	498
525	Formtracer SV-C4500CNC	501, 503
526	Bore Gauge for Extra Small Holes	154, 155
527	Depth Gauge Hook End Type	216
527	Dial Depth Gauge	217
527	Vernier Depth Gauges	215
528	Knife Edge Straight Edge	320
530	Vernier Caliper	181
530	Vernier Caliper carbide-tipped	182
531	Vernier Caliper with thumb clamp	183
532	Vernier Caliper with fine adjustment	183
533	Vernier Caliper Nib Style and Standard Jaws	185
534	Workshop Vernier Caliper with Long jaws	187
536	Carbide Scribing Caliper	190
536	Hook Type Vernier Caliper	201, 203
536	Inside Caliper	199
536	Swivel Vernier Caliper	193
536	Tube Thickness Caliper	202
536	Vernier Blade Type Caliper	196
536	Vernier Neck Caliper	198
536	Vernier Offset Caliper	191
536	Vernier Offset Centreline Caliper	192
536	Vernier Point Caliper	195
539	Linear Scale AT103	395, 396, 397
539	Linear Scale AT113	398, 399, 409
539	Linear Scale AT116	400
539	Linear Scale AT211	410
539	Linear Scale AT715	401
539	Overview NC Linear Scale	404
542	Counter Digimatic instrument	377
542	Counter Linear Gage	375
542	Counter Linear Gauge	373, 374, 376
542	EJ-Counter	371
542	Laser Hologage	369, 370
542	Linear Gage LGK	366, 367
542	Linear Gauge applications	361
542	Linear Gauge LG100 Series	365
542	Linear Gauge LGB	368
543	DIGIMATIC Indicator ID-B	245
543	Digimatic Indicator ID-C	240, 243
543	DIGIMATIC Indicator ID-C	237, 239, 242
543	DIGIMATIC Indicator ID-F	247
543	DIGIMATIC Indicator ID-H	246
543	DIGIMATIC Indicator ID-N	244
543	DIGIMATIC Indicator ID-SX	235
543	DIGIMATIC Solar Indicator	233
544	Laser Scan Micrometer Optional Accessories	391, 392
544	LSM-500S	385
544	LSM-501S	385
544	LSM-503S	386
544	LSM-506S	386
544	LSM-512S	387
544	LSM-516S	387
544	LSM-5200 Display Unit	389
544	LSM-6200 Display Unit	390
544	LSM-902/6900	384

Series No	Description	PAGE
544	LSM-9506	388
546	Spring Balance	299
547	ABSOLUTE Digimatic Indicator Depth Gauge	209
547	ABSOLUTE Digimatic Quick Thickness Gauge	290, 291, 292
550	ABSOLUTE Digimatic Caliper with Nib Style Jaws	174
551	ABSOLUTE Digimatic Caliper with Nib Style and Standard Jaws	175
552	ABSOLUTE Digimatic Carbon Fibre Caliper IP66	176
552	ABSOLUTE Digimatic Carbon Fibre Caliper IP66 with Ceramic jaws	177
552	ABSOLUTE Digimatic Carbon Fibre Caliper IP66 with Extra long jaws	178
552	ABSOLUTE Digimatic Carbon Fibre Caliper IP66 with Interchangeable jaws	179, 180
565	Gauge Block Comparator GBCS-250	335
565	Gauge Block Comparators GBCD-100A	335
568	DIGIMATIC Inside Micrometer 3-Point BOREMATIC	141, 142, 143
568	DIGIMATIC Inside Micromter 3-Point BOREMATIC	140
570	ABSOLUTE DIGIMATIC Height Gauge	222, 223
571	ABSOLUTE DIGIMATIC Depth Gauge	212, 213
571	ABSOLUTE DIGIMATIC Depth Gauge Hook End Type	214
571	Tyre Tread Depth Gauge	218
572	Horizontal Linear Scale	413, 414, 415, 416
572	Vertical Linear Scale	417, 418, 419
573	ABSOLUTE Digimatic Back-Jaw Centreline Caliper	194
573	ABSOLUTE Digimatic Blade Type Caliper	196
573	ABSOLUTE Digimatic Caliper for tolerance measurement	189
573	ABSOLUTE Digimatic Caliper with constant measuring force	188
573	ABSOLUTE DIGIMATIC Inside Caliper	200
573	ABSOLUTE DIGIMATIC Neck Caliper	197
573	ABSOLUTE DIGIMATIC Offset Caliper	191
573	ABSOLUTE DIGIMATIC Offset Centerline Caliper	192
573	ABSOLUTE DIGIMATIC Point Caliper	195
573	Carbide Scribing Caliper	190
573	Inside Caliper	199
573	Tube Thickness Caliper	202
575	DIGIMATIC Indicator ID-U	236
575	Linear Gage LGD	364
575	Linear Gage LGS	363
579	CNC Linear Scale ST46-EZA	406
579	Linear Scale ABS AT1100	407, 411
579	Linear Scale ST36	405
579	Linear Scale ST422	408
	600 - 699	
601	Ceraston	359
611	Gauge Block with CTE	355
611	Steel Gauge Block	345, 346
613	CERA Gauge Block	354
617	ZERO CERA Block	356
619	Gauge Block Accessories	358
64AAB	MeasurLink 9	15, 16, 17, 18, 19
64AAB	MeasurLink Collection Scheduler	18
64AAS	MeasurLink 9	19, 20
	700 - 799	
7	Dial Indicator Depth Gauge	210, 211
7	Head Micro jack	111
7	Indicator accessories	272, 277
7	Joint Magnetic Stand	307
7	Magnetic Stand	308, 309
7	Quick Thickness Gauge	293
7 / 011	Magnetic Base	308
7/519	Gage Stand with circular hardened steel anvil	301
700	QUICK MINI Thickness Gauge	292
	800 - 899	
810	Hardmatic HH-411	558
810	HM-210/220	535, 547

Series No	Description	PAGE
810	HR-530	551
810	HR 600 Basic automatic models	553
810	HV-110/120	540, 546
810	Micro-Vickers and Vickers Set	537, 543
810	Micro-Vickers Hardness HM-110/120	541, 542
810	Micro-Vickers Hardness HM-210/220	536, 539
810	Series 810 - HR-600 Series	555
811	Digital and Analogue Durometers HARDMATIC HH-300	559, 560, 561
900 - 999		
900	Indicator accessories	271, 273
900	Optional Accessories for Depth Gauge	218
900	Optional Accessory for Height Gauge	226, 227
901	Granite Surface Plates	315
901	Lever Indicator accessories	289
902	Cast Iron Surface Plates	314
903	Air drive Unit	363
905	Cable	24
910	Cast Iron V-Blocks	313
911	Cast Iron V-Blocks	313
912	Gauge Stand	304
913	Gage Stand Economy Version	303
916	90° Steel Square	319
926	Precision plug gauge set	330
930	Precision Sine	312
930	Precision vice	310, 311
939	DIGIMATIC Switch box	35
950	Digital Protractor	318
963	HR Rockwell	549
972	Measuring Angle 90°	314
985	Micrometer colour ratchets/speeders	105
999	Overlay Chart Set	464, 466
A - Z		
AT1300	Absolute Scale Unit (Slim Type)	412
DRO Linear Scales	DRO Linear Scales Selection Guide	394
eco-fix plus	eco-fix plus CMM fixtures Series	593
eco-rail	eco-rail CMM fixtures Series	590
Enclosure	Enclosure	596
Formtracer Avant	Formtracer Avant FTA-D3000 and FTA-D4000	496
GEARPAK-Express	GEARPAK-Express	580
HM-200	Double indenter configuration HM-200 Series	538
HM-200	Optional accessories for Vickers hardness testing machines	544
HR-530	Accessories for Rockwell, Rockwell Superficial, Brinell Hardness Tester HR-530 and HR-600	557
K55	opti-fix	617
K65	eco-fix	592
K65	eco-fix CMM fixtures Series	591
K65	Fixturing kits	595
LOG	CMM Software	577, 578, 579
M2 Software	M2 Software for Profile Projectors	460
MACH-Ko-ga-me	Mitutoyo Touch probes for MACH-Ko-ga-me Generation C	584
multiflex	multiflex profile CMM fixtures Series	594
Probe	CMM PROBE	581, 586
Probe	CMM Probes	582, 584, 585
Probe	Vision Probe System for CMMs	583
Quick Vision	Quick Vision WLI Objective	616
Racks	Change Racks	587
Racks	Modular Rack Systems	587
Racks	Modules for Modular Rack System	587
SOFT	QVPAK Vision Software	613
SOFT	Software Quick Scope QSPAK	601
SOFT	Vision Software	599
Umap	UMAP	612

Mitutoyo

Alphabetical Index

Description	Series No	PAGE
2		
2-Point Inside Micrometer	133	146, 147
2-Point Inside Micrometer	137	148
2-Point Inside Micrometer	139	149
2-Point Inside Micrometer	140	150
2-Point Inside Micrometer	141	153
2-Point Inside Micrometer	145	145
3		
3-Point Inside Micrometer	368	136, 137, 138, 139
3-Wire units	313	103
9		
90° Steel Square	916	319
A		
ABSOLUTE Digimatic Back-Jaw Centreline Caliper	573	194
ABSOLUTE Digimatic Blade Type Caliper	573	196
ABSOLUTE Digimatic Caliper	500	171
ABSOLUTE Digimatic Caliper for large measuring range	500	173
ABSOLUTE Digimatic Caliper for tolerance measurement	573	189
ABSOLUTE Digimatic Caliper IP67	500	169
ABSOLUTE Digimatic Caliper with constant measuring force	573	188
ABSOLUTE Digimatic Caliper with Nib Style and Standard Jaws	551	175
ABSOLUTE Digimatic Caliper with Nib Style Jaws	550	174
ABSOLUTE Digimatic Carbide Caliper	500	172
ABSOLUTE Digimatic Carbide Caliper IP67	500	170
ABSOLUTE Digimatic Carbon Fibre Caliper IP66	552	176
ABSOLUTE Digimatic Carbon Fibre Caliper IP66 with Ceramic jaws	552	177
ABSOLUTE Digimatic Carbon Fibre Caliper IP66 with Extra long jaws	552	178
ABSOLUTE Digimatic Carbon Fibre Caliper IP66 with Interchangeable jaws	552	179, 180
ABSOLUTE DIGIMATIC Depth Gauge	571	212, 213
ABSOLUTE DIGIMATIC Depth Gauge Hook End Type	571	214
ABSOLUTE DIGIMATIC Disc Micrometer Quickmike	369	74
ABSOLUTE DIGIMATIC Height Gauge	570	222, 223
ABSOLUTE Digimatic Indicator Depth Gauge	547	209
ABSOLUTE DIGIMATIC Inside Caliper	573	200
ABSOLUTE DIGIMATIC Micrometer QuickMike	293	45
ABSOLUTE DIGIMATIC Neck Caliper	573	197
ABSOLUTE DIGIMATIC Offset Caliper	573	191
ABSOLUTE DIGIMATIC Offset Centerline Caliper	573	192
ABSOLUTE DIGIMATIC Point Caliper	573	195
ABSOLUTE Digimatic Quick Thickness Gauge	547	290, 291, 292
Absolute Scale Unit (Slim Type)	AT1300	412
Accessories for Quick Vision	02A	615
Accessories for Rockwell, Rockwell Superficial, Brinell Hardness Tester HR-530 and HR-600	HR-530	557
Accessories for SJ-210 and SJ-310	178	479, 480
Accessory for Measuring Microscope	176	433
Air drive Unit	903	363
B		
Ball attachment	101	105
Bevel Protractor	187	316, 317
Blade Micrometer	122	86
Bore Gauge	511	158, 161, 164
Bore Gauge Accessories	511	161
Bore Gauge Checker	515	165
Bore Gauge for Blind Holes	511	163
Bore Gauge for Extra Small Holes	526	154, 155
Bore Gauge for Small Holes	511	156
Bore Gauge - Short Leg Type	511	162
Bore Gauge - Standard type	511	157, 159
Bore Gauge with Micrometer Head	511	160
C		

Description	Series No	PAGE
Cable	905	24
Calibration Tester	170	333
Calibration Tester	521	333
Caliper Inspection Sets Metric	516	343, 352
Caliper Jaw Micrometer	143	60
Can Seam Micrometer	147	89
Carbide Scribing Caliper	536	190
Carbide Scribing Caliper	573	190
CARBstrato / CARBapex Series	360	571
Cast Iron Surface Plates	902	314
Cast Iron V-Blocks	910	313
Cast Iron V-Blocks	911	313
CERA Caliper Checker	515	327
CERA Gauge Block	613	354
CERA Gauge block Grade 0 with Inspection Certificate	516	348
CERA Gauge block Grade 1 with Inspection Certificate	516	349
CERA Gauge block Grade 2 with Inspection Certificate	516	350
CERA Gauge block Micrometer Inspection Sets Metric	516	353
Ceramic Metric Gauge Block Sets Overview	516	347
Ceraston	601	359
Change Racks	Racks	587
Check Master	515	329
CMM PROBE	Probe	581, 586
CMM Probes	Probe	582, 584, 585
CMM Software	011	576
CMM Software	LOG	577, 578, 579
CMM Styli		588
CNC Linear Scale ST46-EZA	579	406
Contact point	120	269
Contracer CV-2100	218	491
Counter Digimatic instrument	542	377
Counter Linear Gage	542	375
Counter Linear Gauge	542	373, 374, 376
CRYSTA-APEX	191	565
CRYSTA-Apex EX 1200R Series	191	569
CRYSTA-Apex S 1200 Series	191	564
CRYSTA-APEX V	191	563
D		
Data Processing Unit QM-Data 200	264	462
Depth Gauge Hook End Type	527	216
Depth Micro Checker	515	326
Depth Micrometer	128	206
Depth Micrometer	129	207
Dial Caliper	505	184
Dial Caliper Gauge	209	294, 296
Dial Depth Gauge	527	217
Dial Gauge Micrometer	107	97
Dial Height Gauge	192	221
Dial Indicator	1	248, 250, 251, 266
Dial Indicator	2	253, 254, 255, 256, 257, 258, 259, 267
Dial Indicator	3	263
Dial Indicator	4	265
Dial Indicator Depth Gauge	7	210, 211
Dial Snap Gauges	201	98
DIGIMATIC 2-Point Inside Micrometer	337	151
DIGIMATIC 2-Point Inside Micrometer	339	152
DIGIMATIC 2-Point Inside Micrometer	345	144
DIGIMATIC 3-Point Inside Micrometer	468	132, 134, 135
DIGIMATIC Blade Micrometer	422	84, 85
DIGIMATIC Caliper Gauge	209	295, 297, 298
DIGIMATIC Caliper Jaw Micrometer	343	59
DIGIMATIC Crimp Height Micrometer	342	83
DIGIMATIC Depth Micrometer	329	208
DIGIMATIC Disc Micrometer	323	71
DIGIMATIC Disc Micrometer non-rotating spindle type	369	73
DIGIMATIC Extension cable	011	25
DIGIMATIC Head	350	109, 110
DIGIMATIC Height Gauge	192	224, 225

Description	Series No	PAGE
DIGIMATIC Indicator ID-B	543	245
DIGIMATIC Indicator ID-C	543	237, 239, 242
Digimatic Indicator ID-C	543	240, 243
DIGIMATIC Indicator ID-F	543	247
DIGIMATIC Indicator ID-H	543	246
DIGIMATIC Indicator ID-N	543	244
DIGIMATIC Indicator ID-SX	543	235
DIGIMATIC Indicator ID-U	575	236
DIGIMATIC Inside Micrometer 3-Point BOREMATIC	568	141, 142, 143
DIGIMATIC Inside Micromter 3-Point BOREMATIC	568	140
DIGIMATIC Micrometer	293	39, 40, 41, 42
DIGIMATIC Micrometer interchangeable anvils	340	52
DIGIMATIC Micrometer QuantuMike	293	38
DIGIMATIC non-rotating head	164	108
DIGIMATIC Point Micrometer	342	81
DIGIMATIC Screw Thread Micrometer	326	61
DIGIMATIC Sheet Metal Micrometer	389	56
DIGIMATIC Solar Indicator	543	233
DIGIMATIC Spline Micrometer	331	76
DIGIMATIC Switch box	939	35
DIGIMATIC Tube Micrometer	395	78, 79
DIGIMATIC V-Anvil Micrometer	314	87
Digi Micrometer	293	43
Digital and Analogue Durometers HARDMATIC HH-300	811	559, 560, 561
Digital Height Gauge QM-Height	518	228
Digital Protractor	950	318
Digit Outside Micrometer	193	51
Disc Micrometer	123	72
Disc Micrometer non-rotating spindle type	169	75
Display Unit Mu-Checker	519	380
DMX-1	011	31
DMX-16 / DMX-16 C	011	33
DMX-2	011	31, 32
DMX-3	011	30, 32, 34
DMX-8	011	33
Double indenter configuration HM-200 Series	HM-200	538
DP-1VR DIGIMATIC mini-processor	264	22
DRO Extension cables	174	403
DRO Linear Scales Selection Guide	DRO Linear Scales	394
e		
eco-fix	K65	592
eco-fix CMM fixtures Series	K65	591
eco-fix plus CMM fixtures Series	eco-fix plus	593
eco-rail CMM fixtures Series	eco-rail	590
E		
EJ-Counter	542	371
Enclosure	Enclosure	596
Eyepieces	378	437
F		
FALCIO-APEX 2000/3000 Series	355	570
Fixturing kits	K65	595
Flexible Joint Arm	011 / 076	307
Formtracer Avant C-3000	218	494
Formtracer Avant FTA-C3000 and FTA-C4000	218	493
Formtracer Avant FTA-C4000 series	218	495
Formtracer Avant FTA-D3000 and FTA-D4000	Formtracer Avant	496
Formtracer Avant FTA-D3000 series	218	497
Formtracer CS-3200	525	500
Formtracer CS-3300	525	499
Formtracer Extreme CS-5000CNC and CS-H5000CNC	525	504
Formtracer SV-C3200 and SV-C4500	525	498
Formtracer SV-C4500CNC	525	501, 503
G		
Gage Stand Economy Version	913	303
Gage Stand with circular hardened steel anvil	7/519	301
Gage Stand with granite base	215	305
Gage Stand with Square Hardened Steel Anvil	215 / 7	302

Description	Series No	PAGE
Gauge Block Accessories	516	357
Gauge Block Accessories	619	358
Gauge Block Comparator GBCS-250	565	335
Gauge Block Comparators GBCD-100A	565	335
Gauge Block with CTE	611	355
Gauge Stand	215	303
Gauge Stand	912	304
GEARPAK-Express	GEARPAK-Express	580
Gear Tooth Micrometer	124	69
Gear Tooth Micrometer	324	67
Grade 0 with ISO Inspection Certificate	516	339
Grade 1 with ISO Inspection Certificate	516	340
Grade 2 with ISO Inspection Certificate	516	341
Grade K with ISO JCSS Certificate	516	338
Granite Surface Plates	901	315
Groove Micrometer	146	99
H		
Hardmatic HH-411	810	558
Head	110	127
Head	152	124, 125, 126
Head	153	129
Head 13 mm	148	117, 118, 119
Head 15 mm	149	120
Head 25/50 mm	151	123
Head 25 mm	150	121
Head 5/6,5 mm	148	112, 113
Head 6,5/13 mm	148	114, 115
Head 6,5 mm	148	116
Head Fixtures	303	130
Head Micro jack	7	111
Head non-rotating spindle	153	128
Head non-rotating spindle	197	129
Height Master	515	322, 324
Height Master accessories	515	325
High-Accuracy Digimatic Micrometer	293	37
HM-210/220	810	535, 547
Hook Type Vernier Caliper	536	201, 203
Horizontal Linear Scale	572	413, 414, 415, 416
HR-530	810	551
HR 600 Basic automatic models	810	553
HR Rockwell	963	549
Hub Micrometer	147	90
HV-110/120	810	540, 546
Hyper MF/MF-U Measuring Microscope	176	434, 435
i		
i-Checker Calibration Tester	170	334
I		
Indicating Micrometer	510	94
Indicator accessories	101	274
Indicator accessories	120	269, 270, 271
Indicator accessories	136	276
Indicator accessories	2	276
Indicator accessories	21AAA	268, 269, 270, 272
Indicator accessories	21AZB	275
Indicator accessories	7	272, 277
Indicator accessories	900	271, 273
Inductive Probe Mu-Checker	519	378
Inside Caliper	536	199
Inside Caliper	573	199
Inside Micro Checker	515	328
Interchangeable Anvils for Micrometer Series	324	70
J		
Joint Magnetic Stand	011	306
Joint Magnetic Stand	7	307
K		
KA-Counter	174	402

Mitutoyo

Description	Series No	PAGE
Knife Edge Straight Edge	528	320
L		
Laser Hologage	542	369, 370
Laser Scan Micrometer Optional Accessories	544	391, 392
LEGEX	356	567
Lever Indicator	513	279, 281, 282, 283, 284, 285, 286, 287
Lever Indicator accessories	21CZA	288
Lever Indicator accessories	901	289
Lever Indicator Overview	513	278
Limit Micrometer	113	93
Linear Gage LGD	575	364
Linear Gage LGK	542	366, 367
Linear Gage LGS	575	363
Linear Gauge applications	542	361
Linear Gauge LG100 Series	542	365
Linear Gauge LGB	542	368
Linear Height Gauge LH-600D/D	518	230
Linear Scale ABS AT1100	579	407, 411
Linear Scale AT103	539	395, 396, 397
Linear Scale AT113	539	398, 399, 409
Linear Scale AT116	539	400
Linear Scale AT211	539	410
Linear Scale AT715	539	401
Linear Scale ST36	579	405
Linear Scale ST422	579	408
Litematic	318	381, 382
LSM-500S	544	385
LSM-501S	544	385
LSM-503S	544	386
LSM-506S	544	386
LSM-512S	544	387
LSM-516S	544	387
LSM-5200 Display Unit	544	389
LSM-6200 Display Unit	544	390
LSM-902/6900	544	384
LSM-9506	544	388
m		
multiflex profile CMM fixtures Series	multiflex	594
M		
M2 Software for Profile Projectors	M2 Software	460
MACH	360	573, 574
MACH-KO-GA-ME	357	572
Magnetic Base	7 / 011	308
Magnetic Stand	7	308, 309
Maintenance Kit for Gauge Block	516	359
Manual MF-A/B Models	176	425
Measurement Data Wireless : U-Wave	02AZD	28
Measurement Data Wireless : U-Wave	02AZE	29
Measurement Data Wireless : U-Wave fit	264	26
Measuring Angle 90°	972	314
MeasurLink 9	64AAB	15, 16, 17, 18, 19
MeasurLink 9	64AAS	19, 20
MeasurLink Collection Scheduler	64AAB	18
Metric Workshop Vernier Caliper	160	186
MF Measuring Microscope	176	429
MF-U Measuring Microscope	176	430, 432
Micrometer colour ratchets/speeders	985	105
Micrometer Gauge Block	516	344
Micrometer Head	250	111
Micrometer Inspection Sets Metric	516	344
Micrometer Interchangeable anvil	117	92
Micrometer Interchangeable anvil	317	91
Micrometer non rotating spindle	406	44
Micrometer Setting	167	100, 101, 102
Micrometer Stands	156	104
Micro-Vickers and Vickers Set	810	537, 543
Micro-Vickers Hardness HM-110/120	810	541, 542
Micro-Vickers Hardness HM-210/220	810	536, 539
MiSTAR Series	191	568
MiSTAR Series	357	575
Mitutoyo Touch probes for MACH-Ko-ga-me Generation C	MACH-Ko-ga-me	584
Modular Rack Systems	Racks	587
Modules for Modular Rack System	Racks	587
Motor-Driven Z-axis MF-J Models	176	427
MUX-10F Transmitter	264	33
o		
opti-fix	K55	617
O		
Objectives	378	441, 442, 443, 444, 445, 446, 447, 448, 449, 450, 451, 452
Objectives Lens ML-Series	375	440
One Revolution Dial Indicator	1	252
One Revolution Dial Indicator	2	260, 261, 262
Optical Flats	158	107
Optical Parallels	157	106
Optional Accessories for Depth Gauge	900	218
Optional Accessories for QM-Height	518	229
Optional Accessories for Roundtest	211	523
Optional Accessories for Surftest, Contracer, Formtracer	178	532, 533
Optional accessories for Vickers hardness testing machines	HM-200	544
Optional Accessories Linear Height	518	231
Optional Accessory for Calipers	05	204
Optional Accessory for Height Gauge	900	226, 227
Optional Software USB Communication Tool	178	524
Optional Styli and Arms for Contracer and Formtracer SV-C series	218	530, 531
Optional Styli for Roundtest	211	521, 522
Optional Styli for Surftest and Formtracer SV-C series	178	525, 526, 527, 528, 529
OPTOEYE Edge Sensor	332	463
Outside Micrometer	102	48
Outside Micrometer	103	49, 50
Outside Micrometer adjustable anvil	105	54
Outside Micrometer interchangeable anvils	104	53
Overlay Chart Set	999	464, 466
Overview NC Linear Scale	539	404
P		
PH-3515F Profile Projector	172	458
PJ-H30 Profile Projector	303	454
PJ-PLUS	302	453
Pocket Comparator	183	468, 469
Point Micrometer	112	82
Precision plug gauge set	926	330
Precision Sine	930	312
Precision vice	930	310, 311
Pulsed Light Source for TAGLENS	379	473
PV-5110 Profile Projector	304	456
Q		
Quick DIGIMATIC Micrometer	227	46
Quick Image	361	598
QUICK MINI Thickness Gauge	700	292
Quick Scope	359	600
Quick Thickness Gauge	7	293
Quick Vision	363	602, 603, 607
Quick Vision	365	608, 609, 611
Quick Vision Accel - 3D CNC Vision Measuring System for large work pieces	363	606
Quick Vision WLI	363	610
Quick Vision WLI Objective	Quick Vision	616
QV APEX Pro and QVTP Pro	363	604
QV HYPER Pro and QVTP Pro	363	605
QVPAK Vision Software	SOFT	613

Description	Series No	PAGE
R		
Ratchet Thimble Micrometer	102	47
Reticles for Measuring Microscope TM-500	176	424
Roundtest Extreme RA-2200CNC	211	516
Roundtest Extreme RA-H5200CNC	211	517, 518
Roundtest RA-10	211	506
Roundtest RA-120 and RA-120P	211	508, 509
Roundtest RA-1600	211	510
Roundtest RA-2200	211	512
Roundtest RA-H5200	211	514
S		
Screw Thread Micrometer	125	66
Screw Thread Micrometer	126	63, 65
Sensorpak	02	362
Serie 178 - Surface Roughness Measuring Instrument with Software FORMTRACEPAK	178	487
Serie 211 - Form Measuring Instrument	211	519, 520
Series 105 - 1000 mm to 2000 mm Range	105	55
Series 810 - HR-600 Series	810	555
Setting Rings	177	167
Setting Standards Metric (unified) 60°	167	102
Setting Standards Metric Whitworth 55°	167	102
Sheet Metal Micrometer	118	57
Sheet Metal Micrometer Graduated Dial	119	58
Snap Gauge/Snap Micrometer	523	95, 96
Software Quick Scope QSPAK	SOFT	601
Spline Micrometer	111	77
Spring Balance	546	299
Standard Scales	182	331, 332
Standard Vernier Height Gauge	514	220
Steel Gauge Block	611	345, 346
Steel Metric Gauge Block Sets Overview	516	337
Steel Rule	182	320
Step master	516	330
STRATO-APEX	355	566
Styli Kits		589
Surface Roughness Measuring Instrument with Soft-wrae FORMTRACEPAK	178	488
Surftest Extreme SV-3000CNC	178	489
Surftest Extreme SV-M3000CNC	178	490
Surftest SJ-210	178	475, 476
Surftest SJ-210 and SJ-310 - S-Type	178	478
Surftest SJ-310	178	477
Surftest SJ-410	178	481, 482
Surftest SJ-500 and SJ-500P	178	483, 485
Surftest SV-2100 and SV-2100P	178	484, 486
Swivel Vernier Caliper	536	193
T		
TAGLENS	379	470
TAGPAK-E (Optional Software)	379	471
Telescopic Gauge Set	155	166
Thickness Gauge	184	318
Timerbox	011	35
TM-500 Measuring Microscope	176	421, 423
Tolerance Box	011	35
Touch Probe Option	364	614
Tube Micrometer	115	80
Tube Thickness Caliper	536	202
Tube Thickness Caliper	573	202
Tyre Tread Depth Gauge	571	218
U		
UMAP	Umap	612
Universal Height Master	515	323
USB Input Tool Direct (Digimatic USB cable)	06ADV	23
USB Input Tool - Keyboard Interface	264	30
USB-ITPAK	06AEN	21
V		
V-Anvil Micrometer	114	88
Vernier Blade Type Caliper	536	196
Vernier Caliper	530	181
Vernier Caliper carbide-tipped	530	182
Vernier Caliper Nib Style and Standard Jaws	533	185
Vernier Caliper with fine adjustment	532	183
Vernier Caliper with thumb clamp	531	183
Vernier Depth Gauges	527	215
Vernier Neck Caliper	536	198
Vernier Offset Caliper	536	191
Vernier Offset Centreline Caliper	536	192
Vernier Point Caliper	536	195
Vertical Linear Scale	572	417, 418, 419
Video Microscope Unit	379	472
Video Microscope Unit VMU Series	378	439
Vision accessories	02A	616
Vision Probe System for CMMs	Probe	583
Vision Software	SOFT	599
Vision Unit	359	436
VMU Video Microscope Unit	378	438
W		
Wear Block Sets Metric ISO Standard	516	352
Wear Block Sets Metric with ISO Inspection Certificate	516	343
With ISO Inspection Certificate	516	342, 351
Workpiece Fixtures	172	467
Workshop Vernier Caliper with Long jaws	534	187
Z		
ZERO CERA Block	617	356

Mitutoyo

INDUSTRY 4.0

MeasurLink®

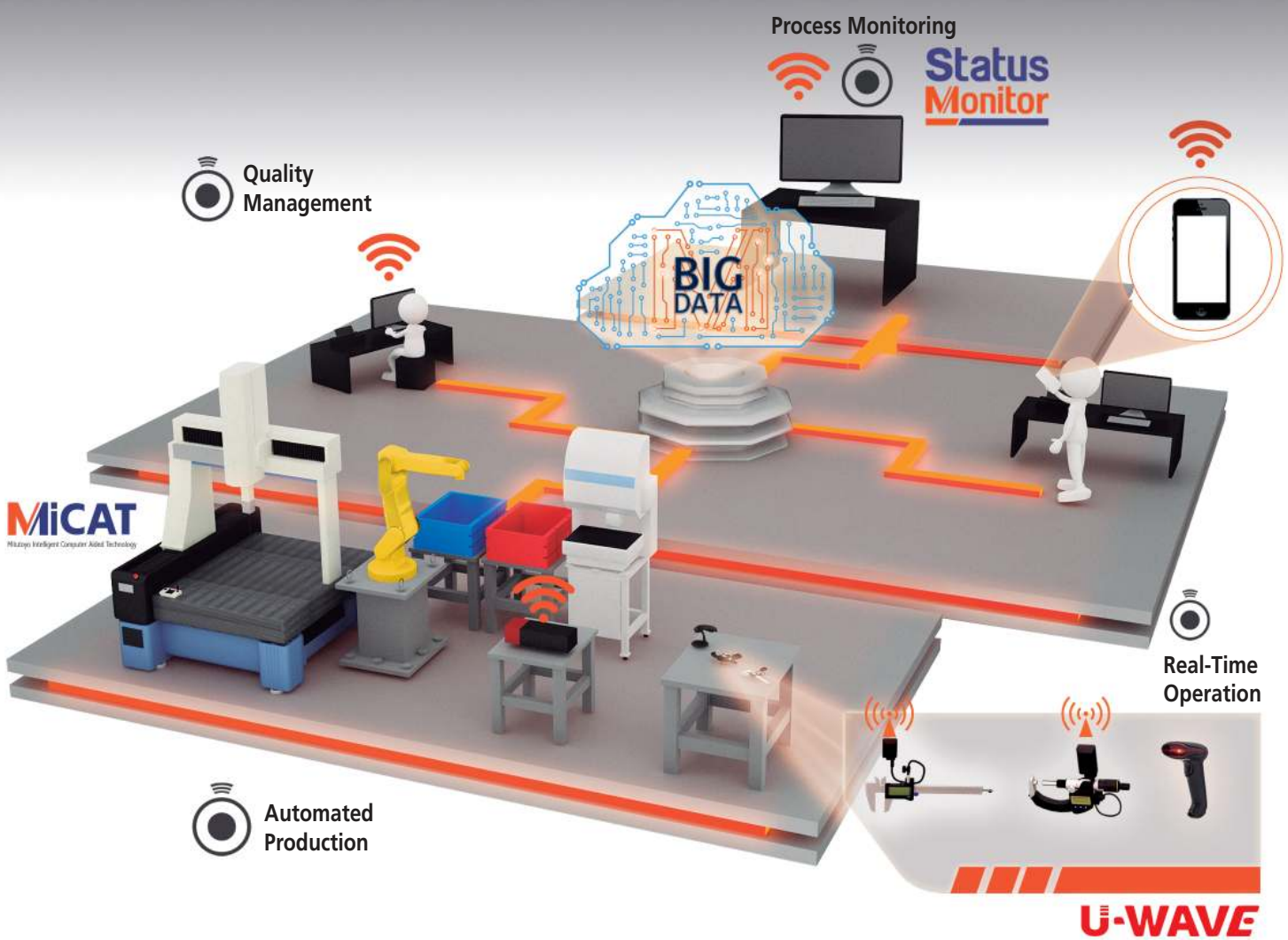

The latest evolutionary step of statistical process control: the new Mitutoyo MeasurLink 9 software

The tried and tested Mitutoyo MeasurLink software has since its first release been popular in all branches for being the perfect instrument for effective statistical process control. The suite is especially renowned for its real-time data collecting capability from Digimatic measuring instruments as well as its data analysis and network monitoring components. It delivers a safe and organised data warehousing system making quality data available for viewing and analysis by any member of production, engineering and managerial staff throughout the company.

The brand-new MeasurLink Version 9 features, among many others, the out¬standing new IoT feature "MT Connect" that enables direct access and numerical data streaming from DAQ sources anywhere in the world via a web URL, without the need to connect to a remote database. The practical "Real-Time Dynamic Gage Data" takes care of charting and collecting dynamic measuring data at high sampling rates and of discrete recording. Streaming (current) data is displayed by a dynamic meter and a dynamic indicator bar.

Scan the QR code with your mobile device and see the Mitutoyo future solutions for IoT/Industry 4.0 in a movie.

For more Info: shop.mitutoyo.eu

M³ InnovaTion

©Mitutoyo 05/2022

PRE 1245

Mitutoyo Europe GmbH
Borsigstrasse 8 -10, 41469 Neuss, GERMANY
TEL: +49 (0) 2137-102-0 FAX: +49 (0) 2137-102-351
www.mitutoyo.eu

Mitutoyo Deutschland GmbH
Borsigstrasse 8-10, 41469 Neuss, GERMANY
TEL: +49 (0) 2137 102-0 FAX: +49 (0) 2137-86 85
www.mitutoyo.de

Mitutoyo Belgium NV
Schaarbeekstraat 20, B-9120 Melsele, BELGIUM
TEL: +32 (0) 3 254 04 44
www.mitutoyo.be

Mitutoyo Česko s.r.o.
Dubská 1626, 415 01 Teplice, CZECH REPUBLIC
TEL: +420 417 514 011 FAX: +420 417 579 867
www.mitutoyo.cz

Mitutoyo France
Paris Nord 2
123 rue de la Belle Etoile, BP 59267 ROISSY EN FRANCE
95957 ROISSY CDG CEDEX, FRANCE
TEL: +33 (1) 49 38 35 00 FAX: +33 (1) 48 63 27 70
www.mitutoyo.fr

Mitutoyo Austria GmbH
Salzburger Straße 260/2 und 260/3, A-4600 Wels, AUSTRIA
TEL: +43 7242 219 998
www.mitutoyo.at

Mitutoyo (UK) Ltd.
Joule Road, West Point Business Park, Andover,
Hampshire SP10 3UX , UNITED KINGDOM
TEL: +44 (0) 1264 353 123 FAX: +44 (0) 1264 354 883
www.mitutoyo.co.uk

Mitutoyo Hungária Kft.
Galamb József utca 9.
2000 Szentendre, HUNGARY
TEL: +36 (0) 1 21 41 447 FAX: +36 (0) 1 21 41 448
www.mitutoyo.hu

Mitutoyo Italiana S.r.l.
Corso Europa, 7
20020 Lainate (MI), ITALY
TEL: +39 (0) 2 935 781 FAX: +39 (0) 2 93 73 290
www.mitutoyo.it

Mitutoyo Nederland B.V.
Koningsschot 41, 3905 PR Veenendaal
THE NETHERLANDS
TEL: +31 (0) 318 53 49 11
www.mitutoyo.nl

Mitutoyo Romania S.R.L.
1A, Drumul Garii Odai Street, Ground Floor
075100 OTOPENI-ILFOV, ROMANIA
TEL: +(40) 311 012 088 FAX: +(40) 311 012 089
www.mitutoyo.ro

Mitutoyo RUS LLC
13 Sharikopodshipnikovskaya, builing 5 (Entrance 1)
115088 Moscow, RUSSIAN FEDERATION
TEL: +7 (0) 495 545 43 90
www.mitutoyo.ru

Mitutoyo Scandinavia AB
Släntvägen 6, 194 61 Upplands Väsby, SWEDEN
TEL: +46 (0) 8 594 109 50 FAX: +46 (0) 8 590 924 10
www.mitutoyo.se

M³ Solution Center Pirkkala
Viherkiitäjä 2A, 33960 Pirkkala, FINLAND
Tel: +358 (0) 20 792 9640
www.mitutoyo.fi

Mitutoyo (Schweiz) AG
Steinackerstrasse 35, 8902 Urdorf, SWITZERLAND
TEL: +41 (0) 44 736 11 50 FAX: +41 (0) 44 736 11 51
www.mitutoyo.ch

Mitutoyo Polska Sp. z o.o.
ul. Graniczna 8A, 54-610 Wrocław, POLAND
TEL: +48 (0) 71 354 83 50 FAX: +48 (0) 71 354 83 55
www.mitutoyo.pl